GUTTERLINE ASPHALT THICKNESS & RAIL HEIGHT

	ASPHALT OVERLAY THICKNESS @ MID-SPAN	RAIL HEIGHT @ MID-SPAN
35' UNITS (SPAN A)	3 1/8"	3'-9 1/8"
70' UNITS (SPAN B)	2"	3'-8"
65' UNITS (SPAN C)	2 1/8"	3'-8 1/8"

	ASPHALT OVERLAY THICKNESS @ ℄ BEARING	RAIL HEIGHT @ ℄ BEARING
END BENT 1 (LEFT)	3 7/16"	3'-9 7/16"
END BENT 1 (RIGHT)	3 5/8"	3'-9 5/8"
BENT 1, BENT 2 & END BENT 2	3 1/2"	3'-9 1/2"

BILL OF MATERIAL FOR VERTICAL CONCRETE BARRIER RAIL

BAR	BARS PER PAIR OF EXTERIOR UNITS	TOTAL NO.	SIZE	TYPE	LENGTH	WEIGHT
	SPAN A - 35' UNIT					
✱B10	40	40	#5	STR	17'-1"	713
✱S13	88	88	#5	2	7'-2"	658
✱EPOXY COATED REINFORCING STEEL				LBS.		1371
CLASS AA CONCRETE				CU.YDS.		9.0
TOTAL VERTICAL CONCRETE BARRIER RAIL				LN. FT.		70.25

BILL OF MATERIAL FOR VERTICAL CONCRETE BARRIER RAIL

BAR	BARS PER PAIR OF EXTERIOR UNITS	TOTAL NO.	SIZE	TYPE	LENGTH	WEIGHT
	SPAN B - 70' UNIT					
✱B25	60	60	#5	STR	22'-11"	1434
✱S13	158	158	#5	2	7'-2"	1181
✱EPOXY COATED REINFORCING STEEL				LBS.		2615
CLASS AA CONCRETE				CU.YDS.		18.1
TOTAL VERTICAL CONCRETE BARRIER RAIL				LN. FT.		140.25

BILL OF MATERIAL FOR VERTICAL CONCRETE BARRIER RAIL

BAR	BARS PER PAIR OF EXTERIOR UNITS	TOTAL NO.	SIZE	TYPE	LENGTH	WEIGHT
	SPAN C - 65' UNIT					
✱B24	60	60	#5	STR	21'-3"	1330
✱S13	148	148	#5	2	7'-2"	1106
✱EPOXY COATED REINFORCING STEEL				LBS.		2436
CLASS AA CONCRETE				CU.YDS.		16.9
TOTAL VERTICAL CONCRETE BARRIER RAIL				LN. FT.		130.25

BAR TYPES

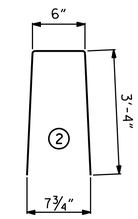

ALL BAR DIMENSIONS ARE OUT TO OUT

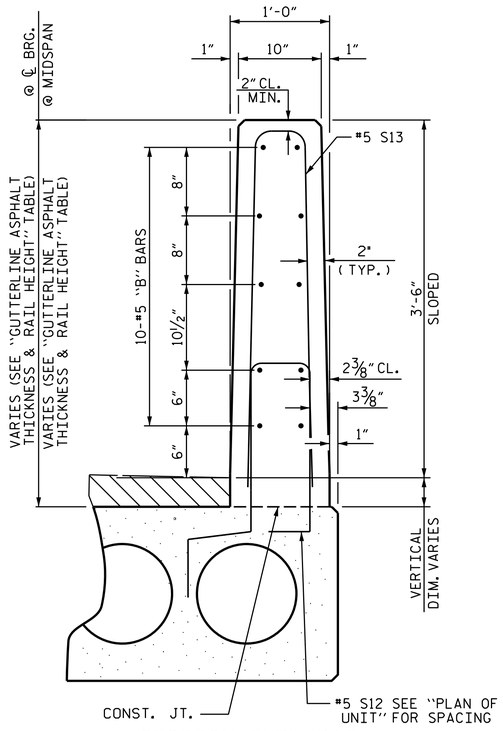

SECTION THRU RAIL

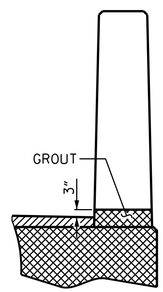

SECTION T-T
AT OPEN JOINT AT BENT
(THIS IS TO BE USED WHERE FOAM JOINT IS NOT USED)

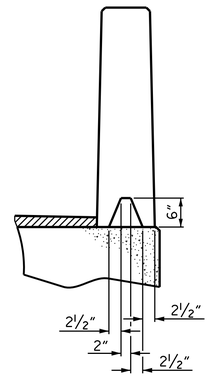

SECTION S-S
AT DAM IN OPEN JOINT
(THIS IS TO BE USED ONLY WHEN SLIP FORM IS USED)

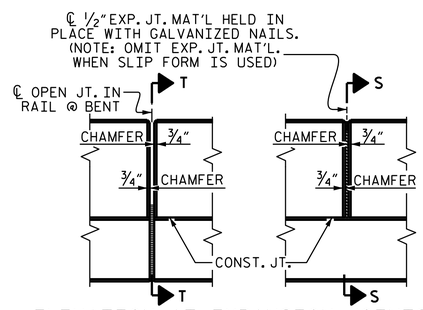

ELEVATION AT EXPANSION JOINTS

VERTICAL CONCRETE BARRIER RAIL DETAILS

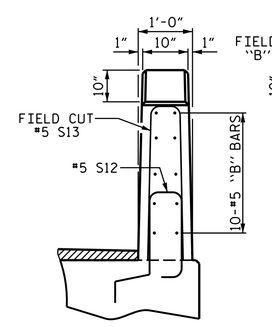

END VIEW

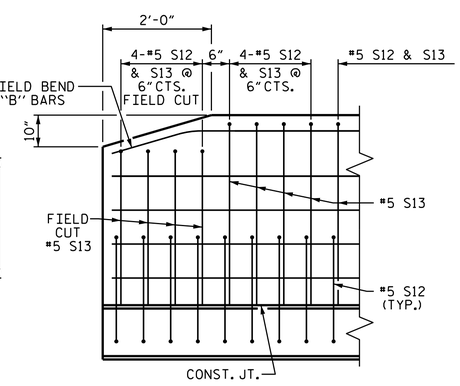

SIDE VIEW

END OF RAIL DETAILS

PROJECT NO. B-6047
RUTHERFORD COUNTY
STATION: 18+20.00 -L-

SHEET 6 OF 6

STATE OF NORTH CAROLINA
DEPARTMENT OF TRANSPORTATION
RALEIGH

3'-0" X 2'-0"
PRESTRESSED CONCRETE
CORED SLAB UNIT

DOCUMENT NOT CONSIDERED FINAL UNLESS ALL SIGNATURES COMPLETED

NORTH CAROLINA PROFESSIONAL SEAL 044167 1/13/2026 ENGINEER ELIZABETH F. LAWES

DocuSigned by: Elizabeth F. Lawes
935E64223CD547C...

WSP USA Inc.
434 FAYETTEVILLE STREET
SUITE 1500
RALEIGH, NC 27601
TEL: 1.919.836.4040
LICENSE NO. F-0165

REVISIONS								SHEET NO.
NO.	BY:	DATE:	NO.	BY:	DATE:			S-13
1			3					TOTAL SHEETS
2			4					25

DRAWN BY : MAA 6/10	REV. 5/18	MAA/THC	
CHECKED BY : MKT 7/10			
ASSEMBLED BY: T.KIRSCHBAUM	DATE : FEB 2023		
CHECKED BY: E.LAWES	DATE : APR 2023		
DESIGN ENGINEER OF RECORD: E.LAWES	DATE : AUG 2023		

1/13/2026
\\Corp.pbwan.net\us\CentralData\USRAG100\Jobs\30900678R.B-6047\B-6047\Structures\2.0 Drafting\DGNs\FINAL\401.023.B-6047.SMU.VCBR.dgn