Docusign Envelope ID: E03116D9-9111-4A69-87F1-46AF0CF86082

09/08/99

TIP PROJECT: B-5833

See Sheet 1A For Index of Sheets
See Sheet 1B For Conventional Plan Sheet Symbols
See Sheet RW01 thru RW04 For Survey Control & Right-of-Way Sheets

STATE OF NORTH CAROLINA
DIVISION OF HIGHWAYS

YADKIN COUNTY

STATE	STATE PROJECT REFERENCE NO.	SHEET NO.	TOTAL SHEETS
N.C.	B-5833	1	

STATE PROJ. NO.	F.A. PROJ. NO.	DESCRIPTION
45786.1.2	N/A	PE
45786.2.1	0021035	R/W, UTIL
45786.3.1	0021035	CONST.

LOCATION: REPLACE BRIDGE NO. 980029 OVER I-77 ON US 21 BUS

TYPE OF WORK: GRADING, DRAINAGE, PAVING, RETAINING WALLS, AND STRUCTURES

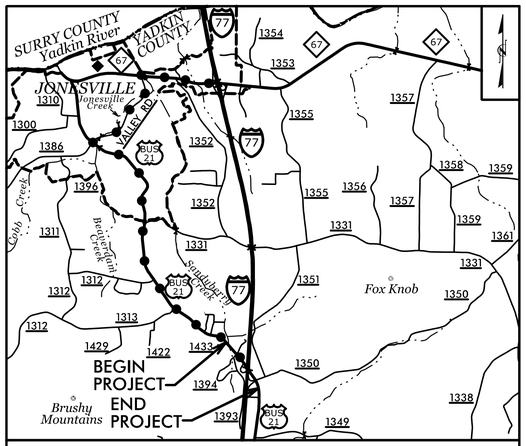

VICINITY MAP
OFFSITE DETOUR

NAD 83/ NA 2011

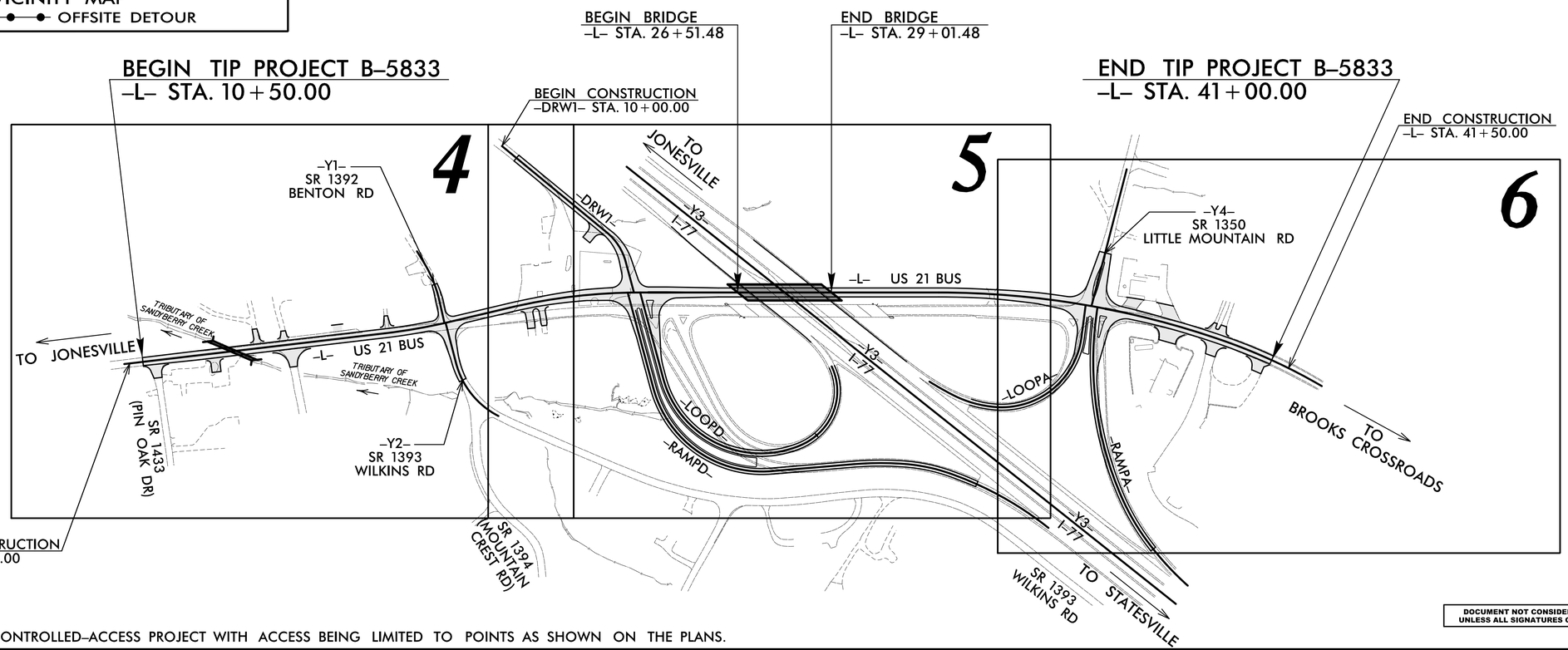

THIS IS A PARTIAL CONTROLLED-ACCESS PROJECT WITH ACCESS BEING LIMITED TO POINTS AS SHOWN ON THE PLANS.

DOCUMENT NOT CONSIDERED FINAL UNLESS ALL SIGNATURES COMPLETED

CONTRACT: C204733

GRAPHIC SCALES

50 25 0 50 100
PLANS

50 25 0 50 100
PROFILE (HORIZONTAL)

10 5 0 10 20
PROFILE (VERTICAL)

DESIGN DATA

ADT 2026 = 4225
ADT 2046 = 4725
K = 11 %
D = 65 %
T = 5 % *
V = 50 MPH
* (TTST 1% + DUAL 4%)
FUNC CLASS = MAJOR COLLECTOR
STATEWIDE TIER DESIGN

PROJECT LENGTH

LENGTH ROADWAY TIP PROJECT B-5833	=	*0.531 mile*
LENGTH STRUCTURES TIP PROJECT B-5833	=	*0.047 mile*
TOTAL LENGTH TIP PROJECT B-5833	=	*0.578 mile*

Prepared For:
DIVISION OF HIGHWAYS
1000 Birch Ridge Dr., Raleigh NC, 27610
By:
TGS ENGINEERS
TGS ENGINEERS
706 HILLSBOROUGH ST.
SUITE 200
RALEIGH, NC 27603
PH (919) 773-8887
CORP. LICENSE NO.: C-0275

2024 STANDARD SPECIFICATIONS

RIGHT OF WAY DATE:
AUGUST 17, 2021

LETTING DATE:
MAY 19, 2026

V. MARCUS LOWERY, P.E.
PROJECT ENGINEER

DAVID STUTTS, P.E.
NCDOT CONTACT

HYDRAULICS ENGINEER
3/5/2026
NORTH CAROLINA PROFESSIONAL SEAL 044158 ENGINEER BENJAMIN J. HENEGAR
Signed by: Benjamin J Henegar
DocuSigned by:
SIGNATURE: P.E.

ROADWAY DESIGN ENGINEER
3/5/2026
NORTH CAROLINA PROFESSIONAL SEAL 027418 ENGINEER V. MARCUS LOWERY
DocuSigned by: Marcus Lowery
9EA7C0E6D318461...
SIGNATURE: P.E.

STATE OF NORTH CAROLINA DEPARTMENT OF TRANSPORTATION

3/3/2026
c:\Projects\NCDOT\B-5833\Roadway\Proj\b5833_rdy_tsh.dgn
User:mlowery

Docusign Envelope ID: B3B9E834-BD03-47B3-8EA5-E959DB7E67C2

PROJECT REFERENCE NO.	SHEET NO.
B-5833	1A

DOCUMENT NOT CONSIDERED FINAL UNLESS ALL SIGNATURES COMPLETED

ROADWAY DESIGN ENGINEER
NORTH CAROLINA PROFESSIONAL ENGINEER SEAL 027418 MARCUS LOWERY
DocuSigned by: Marcus Lowery
SEAL CHECKED ONLY
3/5/2026

INDEX OF SHEETS

SHEET NUMBER	SHEET
1	TITLE SHEET
1A	INDEX OF SHEETS, GENERAL NOTES, AND LIST OF STANDARD DRAWINGS
1B	CONVENTIONAL SYMBOLS
2A–1 THRU 2A–5	PAVEMENT SCHEDULE, TYPICAL SECTIONS, WEDGING DETAILS, DETAIL FOR SHOULDER BERM GUTTER, INCIDENTAL MILLING DETAIL, & AGGREGATE SUBGRADE DETAIL
2B–1 THRU 2B–2	–LDET– SHEET AND INTERSECTION DETAILS
2C–1 THRU 2C–6	DETAILS IN LIEU OF STANDARDS FOR METHOD OF PIPE INSTALLATION, GUIDE FOR PAVING SHOULDERS UNDER BRIDGES, GUARDRAIL PLACEMENT, AND GUARDRAIL INSTALLATION
2D–1 THRU 2D–4	DRAINAGE DETAILS
2G–1 THRU 2G–3	STANDARD TEMPORARY WALL DETAILS
3B–1	SUMMARY OF EARTHWORK, PAVEMENT REMOVAL SUMMARY, SHOULDER BERM GUTTER SUMMARY, SUMMARY OF WOVEN WIRE FENCE, & GUARDRAIL SUMMARY
3D–1 THRU 3D–5	DRAINAGE SUMMARY
3G–1	GEOTECHNICAL SUMMARY
3P–1	PARCEL INDEX SHEET
04 THRU 06	PLAN SHEETS
07 THRU 11	PROFILE SHEETS
RW01 THRU RW06	SURVEY CONTROL AND RIGHT–OF–WAY SHEETS
TMP–1 THRU TMP–16	TRANSPORTATION MANAGEMENT PLANS
PMP–1 THRU PMP–4	PAVEMENT MARKING PLANS
EC–1 THRU EC–9	EROSION CONTROL PLANS
SIGN–1 THRU SIGN–8	SIGNING PLANS
UC–1 THRU UC–8	UTILITY CONSTRUCTION PLANS
UO–1 THRU UO–4	UTILITIES BY OTHERS PLANS
X–1 THRU X–1A	CROSS SECTION INDEX AND EARTHWORK VOLUME SUMMARY SHEETS
X–2 THRU X–51	CROSS SECTIONS
S–1 THRU S–33	STRUCTURE PLANS – BRIDGE
C–1 THRU C–9	STRUCTURE PLANS – CULVERT
W–1 THRU W–5	STRUCTURE PLANS – WALLS

GENERAL NOTES

GENERAL NOTES: 2024 SPECIFICATIONS

EFFECTIVE: 01–16–2024
REVISED:

GRADING AND SURFACING OR RESURFACING AND WIDENING:

THE GRADE LINES SHOWN DENOTE THE FINISHED ELEVATION OF THE PROPOSED SURFACING AT GRADE POINTS SHOWN ON THE TYPICAL SECTIONS. WHERE NO GRADE LINES ARE SHOWN, THE PROFILES SHOWN DENOTE THE TOP ELEVATION OF THE EXISTING PAVEMENT ALONG THE CENTER LINE OF SURVEY ON WHICH THE PROPOSED RESURFACING WILL BE PLACED. GRADE LINES MAY BE ADJUSTED BY THE ENGINEER IN ORDER TO SECURE A PROPER TIE–IN.

CLEARING:

CLEARING ON THIS PROJECT SHALL BE PERFORMED TO THE LIMITS ESTABLISHED BY METHOD II.

SUPERELEVATION:

ALL CURVES ON THIS PROJECT SHALL BE SUPERELEVATED IN ACCORDANCE WITH STD. NO. 225.04 USING THE RATE OF SUPERELEVATION AND RUNOFF SHOWN ON THE PLANS. SUPERELEVATION IS TO BE REVOLVED ABOUT THE GRADE POINTS SHOWN ON THE TYPICAL SECTIONS.

SHOULDER CONSTRUCTION:

ASPHALT, EARTH, AND CONCRETE SHOULDER CONSTRUCTION ON THE HIGH SIDE OF SUPERELEVATED CURVES SHALL BE IN ACCORDANCE WITH STD. NO. 560.01

SIDE ROADS:

THE CONTRACTOR WILL BE REQUIRED TO DO ALL NECESSARY WORK TO PROVIDE SUITABLE CONNECTIONS WITH ALL ROADS, STREETS, AND DRIVES ENTERING THIS PROJECT. THIS WORK WILL BE PAID FOR AT THE CONTRACT UNIT PRICE FOR THE PARTICULAR ITEMS INVOLVED.

SUBSURFACE DRAINS:

SUBSURFACE DRAINS SHALL BE CONSTRUCTED IN ACCORDANCE WITH STD. NO. 815.02 AT LOCATIONS DIRECTED BY THE ENGINEER.

SHOULDER DRAINS:

SHOULDER DRAINS SHALL BE CONSTRUCTED IN ACCORDANCE WITH STD. NO. 816.02 AND DETAILS IN PLANS AT LOCATIONS DIRECTED BY THE ENGINEER.

DRIVEWAYS:

DRIVEWAYS SHALL BE CONSTRUCTED IN ACCORDANCE WITH STD. 848.02 USING 3 FOOT RADII OR RADII AS SHOWN ON THE PLANS. LOCATIONS OF DRIVES WILL BE AS SHOWN ON THE PLANS OR AS DIRECTED BY THE ENGINEER.

STREET TURNOUT:

STREET RETURNS SHALL BE CONSTRUCTED IN ACCORDANCE WITH STD. NO. 848.04 USING THE RADII NOTED ON PLANS.

GUARDRAIL:

THE GUARDRAIL LOCATIONS SHOWN ON THE PLANS MAY BE ADJUSTED DURING CONSTRUCTION AS DIRECTED BY THE ENGINEER. THE CONTRACTOR SHOULD CONSULT WITH THE ENGINEER PRIOR TO ORDERING GUARDRAIL MATERIAL.

TEMPORARY SHORING:

SHORING REQUIRED FOR THE MAINTENANCE OF TRAFFIC NOT SHOWN ON THE PLANS WILL BE PAID FOR AT THE CONTRACT PRICE FOR "TEMPORARY SHORING".

END BENTS:

THE ENGINEER SHALL CHECK THE STRUCTURE END BENT PLANS, DETAILS, AND CROSS–SECTION PRIOR TO SETTING OF THE SLOPE STAKES FOR THE EMBANKMENT OR EXCAVATION APPROACHING A BRIDGE.

UTILITIES:

UTILITY OWNERS ON THIS PROJECT ARE

Water — Town of Jonesville; Sanitary Sewer — Yadkin Valley Sewer Authority,

Power — Duke Energy

Telecommunications — Charter/Spectrum; Brightspeed/Lumen; Zirrus

ANY RELOCATION OF EXISTING UTILITIES WILL BE ACCOMPLISHED BY OTHERS, EXCEPT AS SHOWN ON THE PLANS.

RIGHT–OF–WAY MARKERS:

ALL RIGHT–OF–WAY MARKERS ON THIS PROJECT SHALL BE PLACED BY CONTRACT.

STANDARD DRAWINGS

EFF. 01–16–2024
REV.

2024 ROADWAY ENGLISH STANDARD DRAWINGS

The following Roadway Standards as appear in "Roadway Standard Drawings" Contracts Standards and Development Unit – N. C. Department of Transportation – Raleigh, N. C., Dated January 16, 2024 are applicable to this project and by reference hereby are considered a part of these plans:

STD.NO.	TITLE
DIVISION 2 – EARTHWORK	
200.02	Method of Clearing – Method II
225.01	Guide for Grading Subgrade – Interstate and Freeway
225.02	Guide for Grading Subgrade – Secondary and Local
225.03	Deceleration and Acceleration Lanes
225.04	Method of Obtaining Superelevation – Two Lane Pavement
225.06	Method of Grading Sight Distance at Intersections
225.09	Guide for Shoulder and Ditch Transition at Grade Separations
DIVISION 3 – PIPE CULVERTS	
300.01	Method of Pipe Installation (See 300D0101 & 300D0102 Sheets 2C–1 & 2C–2)
310.10	Driveway Pipe Construction
DIVISION 4 – MAJOR STRUCTURES	
423.03	Bridge Approach Fills – Type 2 Approach Fill for Bridge Abutment with MSE Wall
DIVISION 5 – SUBGRADE, BASES AND SHOULDERS	
560.01	Method of Shoulder Construction – High Side of Superelevated Curve – Method I
DIVISION 6 – ASPHALT BASES AND PAVEMENTS	
610.04	Guide for Paving Shoulders Under Bridges – Method IV (See 610D0401 Sheet 2C–3)
654.01	Pavement Repairs
665.01	Asphalt Shoulders – Milled Rumble Strips
665.02	Limits of Asphalt Shoulders – Milled Rumble Strips
DIVISION 7 – CONCRETE PAVEMENTS AND SHOULDERS	
700.01	Concrete Pavement Joints – Construction and Contraction Joints
700.02	Expansion Joint Layout – for Rigid Doweled Pavement at Bridges
700.03	Dowel Assembly
700.04	Concrete Pavement Header Board
700.05	Tying Proposed Pavement to Existing Pavement
DIVISION 8 – INCIDENTALS	
806.01	Concrete Right–of–Way Marker
806.02	Granite Right–of–Way Marker
806.03	Concrete Contol of Access Marker
815.02	Subsurface Drain
816.02	Aggregate Shoulder Drain
838.27	Reinforced Concrete Endwall – for Single 60" Pipe 90 Skew
838.57	Reinforced Brick Endwall – for Single 60" Pipe 90 Skew
838.75	Notes for Reinforced Brick Endwall – Std. Dwg 838.51 thru 838.70
838.80	Precast Endwalls – 12" thru 72" Pipe 90 Skew
840.00	Concrete Base Pad for Drainage Structures
840.01	Brick Catch Basin – 12" thru 54" Pipe
840.02	Concrete Catch Basin – 12" thru 54" Pipe
840.03	Frame, Grates and Hood – for Use on Standard Catch Basin
840.14	Concrete Drop Inlet – 12" thru 30" Pipe
840.15	Brick Drop Inlet – 12" thru 30" Pipe
840.16	Drop Inlet Frame and Grates – for use with Std. Dwg 840.14 and 840.15
840.18	Concrete Grated Drop Inlet Type 'B' – 12" thru 36" Pipe
840.20	Frames and Wide Slot Flat Grates
840.22	Frames and Wide Slot Sag Grates
840.24	Frames and Narrow Slot Sag Grates
840.25	Anchorage for Frames – Brick or Concrete or Precast
840.27	Brick Grated Drop Inlet Type 'B' – 12" thru 36" Pipe
840.29	Frames and Narrow Slot Flat Grates
840.31	Concrete Junction Box – 12" thru 66" Pipe
840.32	Brick Junction Box – 12" thru 66" Pipe
840.35	Traffic Bearing Grated Drop Inlet – for Cast Iron Double Frame and Grates
840.45	Precast Drainage Structure
840.54	Manhole Frame and Cover
840.66	Drainage Structure Steps
840.71	Concrete and Brick Pipe Plug
840.72	Pipe Collar
846.01	Concrete Curb, Gutter and Curb & Gutter
846.04	Drop Inlet Installation in Shoulder Berm Gutter
848.02	Driveway Turnout – Radius Type
848.04	Street Turnout
850.01	Concrete Paved Ditches
852.01	Concrete Islands
852.06	Method for Placement of Drop Inlets in Concrete Islands
857.01	Precast Reinforced Concrete Barrier – 41" Single Faced
862.01	Guardrail Placement (See 862D0104 & 862D0106 Sheets 2C–4 & 2C–5)
862.02	Guardrail Installation (See 862D0205 Sheet 2C–6)
862.03	Structure Anchor Units
862.04	Anchoring End of Guardrail – for B–77 and B–83 Anchor Units
865.01	Cable Guiderail
866.02	Woven Wire Fence – with Wood Post
876.01	Rip Rap in Channels and Ditches
876.02	Guide for Rip Rap at Pipe Outlets
876.04	Drainage Ditches with Class 'B' Rip Rap

3/4/2026
C:\Projects\NCDOT\B-5833\Roadway\Proj\b5833_rdy_psh_1a.dgn
jsarmiento

9/10/2021

PROJECT REFERENCE NO.	SHEET NO.
B-5833	1B

STATE OF NORTH CAROLINA, DIVISION OF HIGHWAYS

CONVENTIONAL PLAN SHEET SYMBOLS

Note: Not to Scale

BOUNDARIES AND PROPERTY:

- State Line
- County Line
- Township Line
- City Line
- Reservation Line
- Property Line
- Existing Iron Pin (EIP)
- Computed Property Corner
- Existing Concrete Monument (ECM)
- Parcel/Sequence Number
- Existing Fence Line
- Proposed Woven Wire Fence
- Proposed Chain Link Fence
- Proposed Barbed Wire Fence
- Existing Wetland Boundary
- Proposed Wetland Boundary
- Existing Endangered Animal Boundary
- Existing Endangered Plant Boundary
- Existing Historic Property Boundary
- Known Contamination Area: Soil
- Potential Contamination Area: Soil
- Known Contamination Area: Water
- Potential Contamination Area: Water
- Contaminated Site: Known or Potential

BUILDINGS AND OTHER CULTURE:

- Gas Pump Vent or U/G Tank Cap
- Sign
- Well
- Small Mine
- Foundation
- Area Outline
- Cemetery
- Building
- School
- Church
- Dam

HYDROLOGY:

- Stream or Body of Water
- Hydro, Pool or Reservoir
- Jurisdictional Stream
- Buffer Zone 1
- Buffer Zone 2
- Flow Arrow
- Disappearing Stream
- Spring
- Wetland
- Proposed Lateral, Tail, Head Ditch
- False Sump

RAILROADS:

- Standard Gauge
- RR Signal Milepost
- Switch
- RR Abandoned
- RR Dismantled

RIGHT OF WAY & PROJECT CONTROL:

- Primary Horiz Control Point
- Primary Horiz and Vert Control Point
- Secondary Horiz and Vert Control Point
- Vertical Benchmark
- Existing Right of Way Monument
- Proposed Right of Way Monument (Rebar and Cap)
- Proposed Right of Way Monument (Concrete)
- Existing Permanent Easement Monument
- Proposed Permanent Easement Monument (Rebar and Cap)
- Existing C/A Monument
- Proposed C/A Monument (Rebar and Cap)
- Proposed C/A Monument (Concrete)
- Existing Right of Way Line
- Proposed Right of Way Line
- Existing Control of Access Line
- Proposed Control of Access Line
- Proposed ROW and CA Line
- Existing Easement Line
- Proposed Temporary Construction Easement
- Proposed Temporary Drainage Easement
- Proposed Permanent Drainage Easement
- Proposed Permanent Drainage/Utility Easement
- Proposed Permanent Utility Easement
- Proposed Temporary Utility Easement
- Proposed Aerial Utility Easement

ROADS AND RELATED FEATURES:

- Existing Edge of Pavement
- Existing Curb
- Proposed Slope Stakes Cut
- Proposed Slope Stakes Fill
- Proposed Curb Ramp
- Existing Metal Guardrail
- Proposed Guardrail
- Existing Cable Guiderail
- Proposed Cable Guiderail
- Equality Symbol
- Pavement Removal

VEGETATION:

- Single Tree
- Single Shrub
- Hedge
- Woods Line
- Orchard
- Vineyard

EXISTING STRUCTURES:

MAJOR:

- Bridge, Tunnel or Box Culvert
- Bridge Wing Wall, Head Wall and End Wall

MINOR:

- Head and End Wall
- Pipe Culvert
- Footbridge
- Drainage Box: Catch Basin, DI or JB
- Paved Ditch Gutter
- Storm Sewer Manhole
- Storm Sewer

UTILITIES:

** SUE – Subsurface Utility Engineering*
LOS – Level of Service – A,B,C or D (Accuracy)

POWER:

- Existing Power Pole
- Proposed Power Pole
- Existing Joint Use Pole
- Proposed Joint Use Pole
- Power Manhole
- Power Line Tower
- Power Transformer
- U/G Power Cable Hand Hole
- H-Frame Pole
- U/G Power Line Test Hole (SUE – LOS A)*
- U/G Power Line (SUE – LOS B)*
- U/G Power Line (SUE – LOS C)*
- U/G Power Line (SUE – LOS D)*

TELEPHONE:

- Existing Telephone Pole
- Proposed Telephone Pole
- Telephone Manhole
- Telephone Pedestal
- Telephone Cell Tower
- U/G Telephone Cable Hand Hole
- U/G Telephone Test Hole (SUE – LOS A)*
- U/G Telephone Cable (SUE – LOS B)*
- U/G Telephone Cable (SUE – LOS C)*
- U/G Telephone Cable (SUE – LOS D)*
- U/G Telephone Conduit (SUE – LOS B)*
- U/G Telephone Conduit (SUE – LOS C)*
- U/G Telephone Conduit (SUE – LOS D)*
- U/G Fiber Optics Cable (SUE – LOS B)*
- U/G Fiber Optics Cable (SUE – LOS C)*
- U/G Fiber Optics Cable (SUE – LOS D)*

WATER:

- Water Manhole
- Water Meter
- Water Valve
- Water Hydrant
- U/G Water Line Test Hole (SUE – LOS A)*
- U/G Water Line (SUE – LOS B)*
- U/G Water Line (SUE – LOS C)*
- U/G Water Line (SUE – LOS D)*
- Above Ground Water Line

TV:

- TV Pedestal
- TV Tower
- U/G TV Cable Hand Hole
- U/G TV Test Hole (SUE – LOS A)*
- U/G TV Cable (SUE – LOS B)*
- U/G TV Cable (SUE – LOS C)*
- U/G TV Cable (SUE – LOS D)*
- U/G Fiber Optic Cable (SUE – LOS B)*
- U/G Fiber Optic Cable (SUE – LOS C)*
- U/G Fiber Optic Cable (SUE – LOS D)*

GAS:

- Gas Valve
- Gas Meter
- U/G Gas Line Test Hole (SUE – LOS A)*
- U/G Gas Line (SUE – LOS B)*
- U/G Gas Line (SUE – LOS C)*
- U/G Gas Line (SUE – LOS D)*
- Above Ground Gas Line

SANITARY SEWER:

- Sanitary Sewer Manhole
- Sanitary Sewer Cleanout
- U/G Sanitary Sewer Line
- Above Ground Sanitary Sewer
- SS Force Main Line Test Hole (SUE – LOS A)*
- SS Force Main Line (SUE – LOS B)*
- SS Force Main Line (SUE – LOS C)*
- SS Force Main Line (SUE – LOS D)*

MISCELLANEOUS:

- Utility Pole
- Utility Pole with Base
- Utility Located Object
- Utility Traffic Signal Box
- Utility Unknown U/G Line (SUE – LOS B)*
- U/G Tank; Water, Gas, Oil
- Underground Storage Tank, Approx. Loc.
- A/G Tank; Water, Gas, Oil
- Geoenvironmental Boring
- Abandoned According to Utility Records — AATUR
- End of Information — E.O.I.

Docusign Envelope ID: 3C666FE1-3509-464A-A66A-3B885C7DF958

6/2/99

PAVEMENT SCHEDULE

FINAL PAVEMENT DESIGN DECEMBER 16, 2025

A1	7" DOWELED JOINTED CONCRETE ASPHALT	R1	8"X18" CONCRETE CURB.
C1	PROP. APPROX. 3" ASPHALT CONCRETE SURFACE COURSE, TYPE S9.5B, AT AN AVERAGE RATE OF 165 LBS. PER SQ. YD. IN EACH OF TWO LAYERS.	R2	2'-6" CONCRETE CURB AND GUTTER.
C2	PROP. VAR. DEPTH ASPHALT CONCRETE SURFACE COURSE, TYPE S9.5B, AT AN AVERAGE RATE OF 110 LBS. PER SQ. YD. PER 1" DEPTH. TO BE PLACED IN LAYERS NOT TO EXCEED 1½" IN DEPTH.	R3	5" MONOLITHIC CONCRETE ISLAND (KEYED-IN EXCEPT WHERE NOTED)
C3	PROP. APPROX. 2" ASPHALT CONCRETE SURFACE COURSE, TYPE S9.5B, AT AN AVERAGE RATE OF 110 LBS. PER SQ. YD. IN EACH OF TWO LAYERS.	R4	CONCRETE SHOULDER BERM GUTTER
C4	PROP. APPROX. 3" ASPHALT CONCRETE SURFACE COURSE, TYPE S9.5C, AT AN AVERAGE RATE OF 168 LBS. PER SQ. YD. IN EACH OF TWO LAYERS.	R5	41" SINGLE FACED PRECAST REINFORCED CONC. BARRIER
D1	PROP. APPROX. 4" ASPHALT CONCRETE INTERMEDIATE COURSE, TYPE I19.0C, AT AN AVERAGE RATE OF 456 LBS. PER SQ. YD.	T	EARTH MATERIAL.
D2	PROP. VAR. DEPTH ASPHALT CONCRETE INTERMEDIATE COURSE, TYPE I19.0C, AT AN AVERAGE RATE OF 114 LBS. PER SQ. YD. PER 1" DEPTH, TO BE PLACED IN LAYERS NOT LESS THAN 2½" IN DEPTH OR GREATER THAN 4" IN DEPTH.	U	EXISTING PAVEMENT.
E1	PROP. APPROX. 4" ASPHALT CONCRETE BASE COURSE, TYPE B25.0C, AT AN AVERAGE RATE OF 456 LBS. PER SQ. YD.	V1	INCIDENTAL MILLING
E2	PROP. VAR. DEPTH ASPHALT CONCRETE BASE COURSE, TYPE B25.0C, AT AN AVERAGE RATE OF 114 LBS. PER SQ. YD. PER 1" DEPTH. TO BE PLACED IN LAYERS NOT LESS THAN 3" IN DEPTH OR GREATER THAN 5½" IN DEPTH.	V2	MILLED RUMBLE STRIPS (ASPHALT CONCRETE)
E3	PROP. APPROX. 7.25" ASPHALT CONCRETE BASE COURSE, TYPE B25.0C, TO BE PLACED IN TWO LAYERS. THE FIRST LAYER IS TO BE 4" IN DEPTH AND THE SECOND LAYER IS TO BE 3.25" IN DEPTH PLACED AT AVERAGE RATES OF 456 LBS. PER SQ. YD. AND 370.5 LBS. PER SQ. YD. RESPECTIVELY.	W1	WEDGING (VARIABLE DEPTH ASPHALT PAVEMENT, SEE DETAIL ON THIS SHEET)
J1	PROP. 6" AGGREGATE BASE COURSE.	W2	WEDGING (VARIABLE DEPTH ASPHALT PAVEMENT, SEE DETAIL ON THIS SHEET)
P	PRIME COAT (APP. RATE = 0.35 GAL/SY)		

NOTE: PAVEMENT EDGE SLOPES ARE 1:1 UNLESS SHOWN OTHERWISE.

DETAIL W1

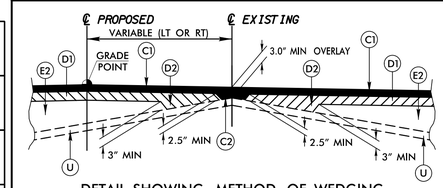

DETAIL SHOWING METHOD OF WEDGING FOR –L–

DETAIL W2

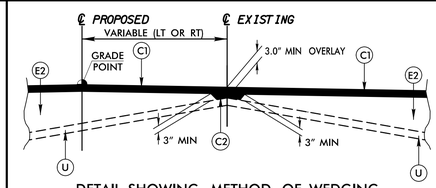

DETAIL SHOWING METHOD OF WEDGING FOR –Y2–, –DRW1–, –Y4–

DETAIL FOR SHOULDER BERM GUTTER

SEE CORRESPONDING TYPICAL SECTION FOR PAVEMENT DESIGN.
SEE TYPICAL SECTIONS AND PLANS FOR ACTUAL DIMENSIONS.

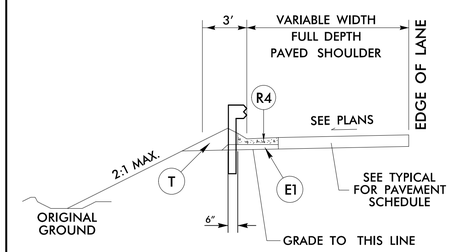

LINE	STATIONS
–L–	25+03.74 to 26+63.21 RT
–Y3–	11+93.13 to 13+40.69 RT
–Y3–	17+29.49 to 18+52.25 LT

INCIDENTAL MILLING DETAIL

NOTE: MIRROR FOR END OF CONSTRUCTION

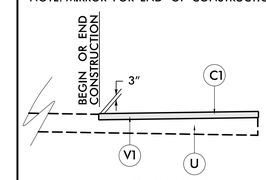

USE DETAIL AS FOLLOWS:

MILLING AND OVERLAY FOR TIE-INS:
-L- STA. 10+50 TO -STA. 11+50
-L- STA. 40+00 TO STA. 41+00
-Y2- STA. 11+00 TO STA. 11+60
-DRW1- STA. 10+00 TO STA. 11+00
-Y4- STA. 12+30 TO STA. 13+30

PROJECT REFERENCE NO.	SHEET NO.
B-5833	2A-1

ROADWAY DESIGN ENGINEER
NORTH CAROLINA PROFESSIONAL SEAL 027418 ENGINEER MARCUS LOWERY
3/9/2026

PAVEMENT DESIGN ENGINEER
NORTH CAROLINA PROFESSIONAL SEAL 044590 ENGINEER ANDREW D. WARGO
3/10/2026

DOCUMENT NOT CONSIDERED FINAL UNLESS ALL SIGNATURES COMPLETED

TGS ENGINEERS
706 HILLSBOROUGH ST. SUITE 200
RALEIGH, NC 27603
PH (919) 773-8887
CORP. LICENSE NO.: C-0275

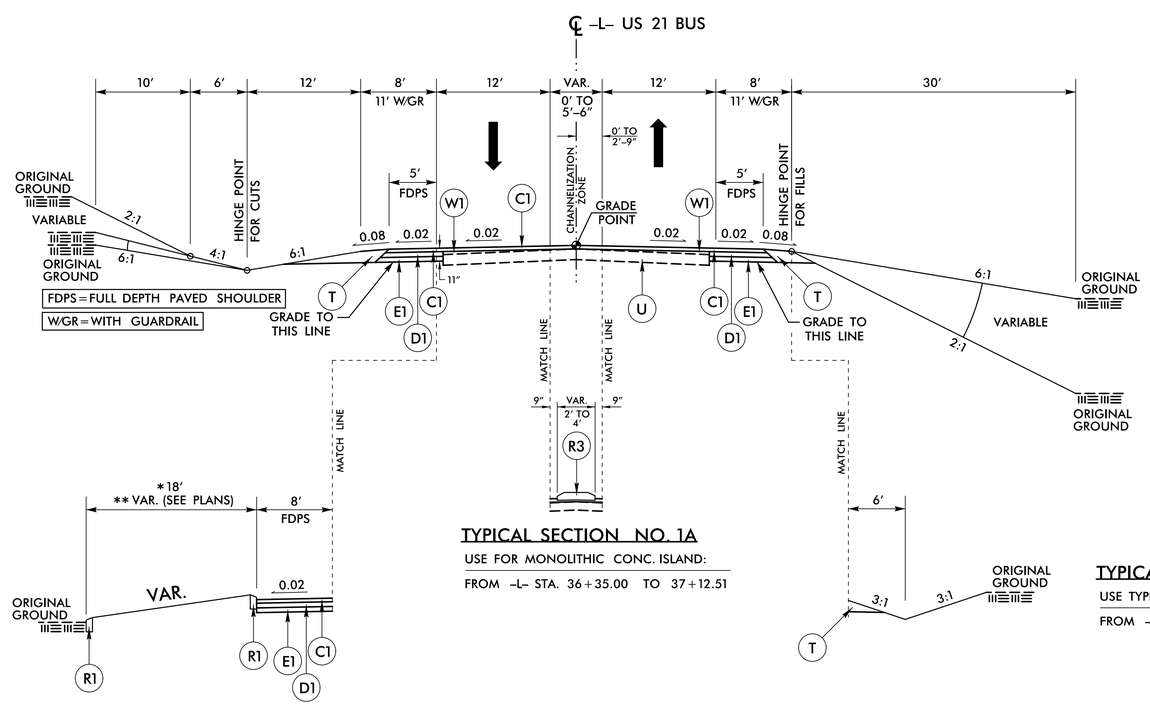

TYPICAL SECTION NO. 1

USE TYPICAL SECTION NO. 1:

FROM –L– STA. 10+50.00 TO 19+90.00
FROM –L– STA. 34+88.00 TO 41+00.00

TYPICAL SECTION NO. 1A

USE FOR MONOLITHIC CONC. ISLAND:

FROM –L– STA. 36+35.00 TO 37+12.51

TYPICAL SECTION NO. 1B

USE TYPICAL SECTION NO. 1B:

FROM –L– STA. 10+50.00 TO 13+00.00 RT

TYPICAL SECTION NO. 1C

USE TYPICAL SECTION NO. 1C:

* FROM –L– STA. 14+45.00 TO 16+23.00 LT
** FROM –L– STA. 36+74.28 TO 38+50.00 LT

3/9/2026
3:39:09 pm
User: TIM LOWERY

Docusign Envelope ID: 3C666FE1-3509-464A-A66A-3B885C7DF958

6/2/99

PROJECT REFERENCE NO.	SHEET NO.
B-5833	2A-2

ROADWAY DESIGN ENGINEER
NORTH CAROLINA PROFESSIONAL SEAL 027418 ENGINEER L. MARCUS LOWERY
3/9/2026

PAVEMENT DESIGN ENGINEER
NORTH CAROLINA PROFESSIONAL SEAL 044590 ENGINEER ANDREW D. WAKCO
3/10/2026

DOCUMENT NOT CONSIDERED FINAL UNLESS ALL SIGNATURES COMPLETED

TGS ENGINEERS
706 HILLSBOROUGH ST. SUITE 200
RALEIGH, NC 27603
PH (919) 773-8887
CORP. LICENSE NO.: C-0275

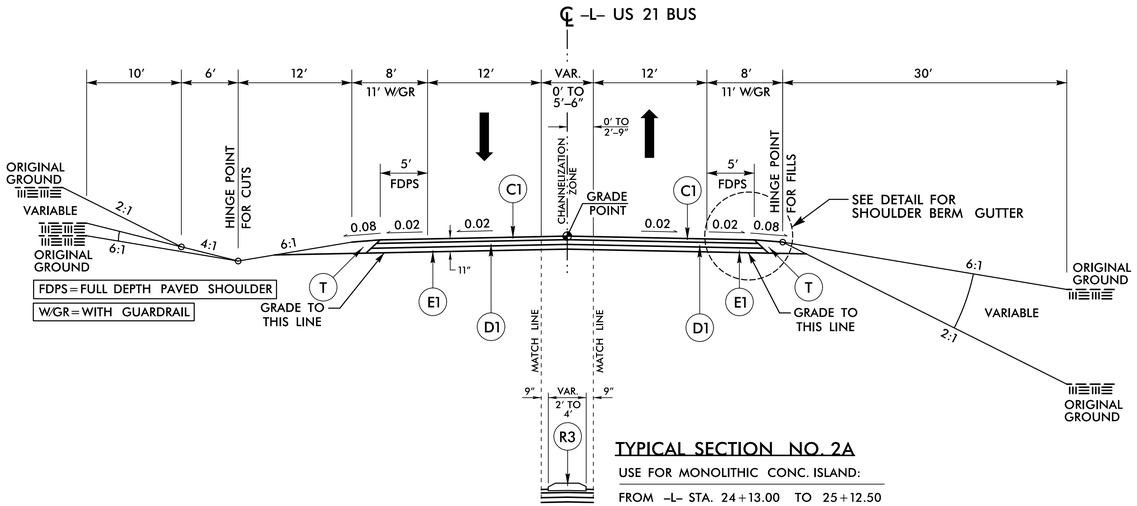

TYPICAL SECTION NO. 2A

USE FOR MONOLITHIC CONC. ISLAND:

FROM -L- STA. 24+13.00 TO 25+12.50

TYPICAL SECTION NO. 2

USE TYPICAL SECTION NO. 2:

FROM -L- STA. 19+90.00 TO 26+51.48 (BEGIN BRIDGE)
FROM -L- STA. 29+01.48 (END BRIDGE) TO 34+88.00

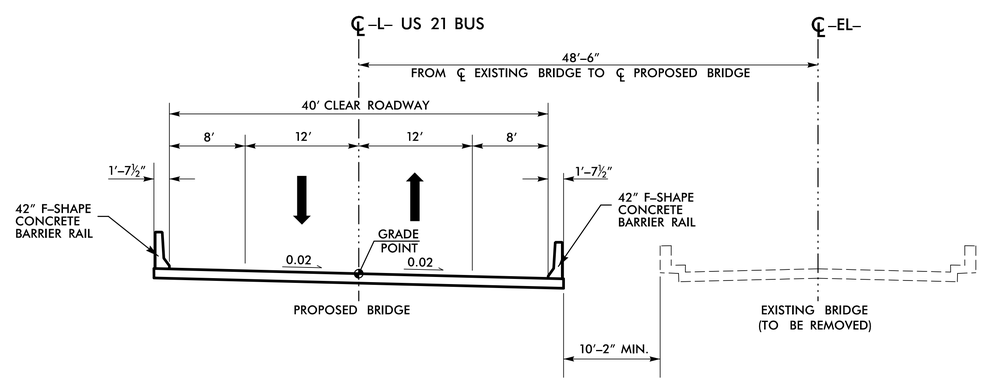

TYPICAL SECTION NO. 3

USE TYPICAL SECTION NO. 3:

FROM -L- STA. 26+51.48 (BEGIN BRIDGE) TO STA. 29+01.48 (END BRIDGE)

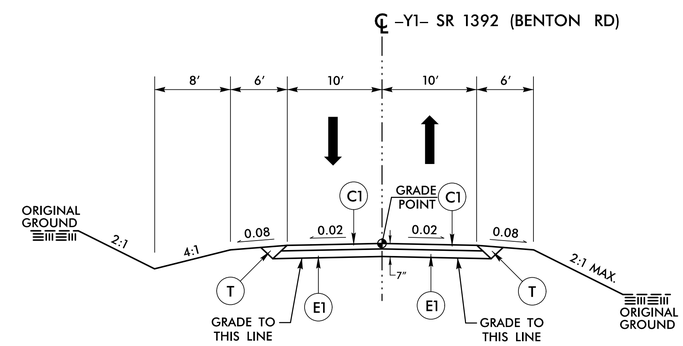

TYPICAL SECTION NO. 4

USE TYPICAL SECTION NO. 4:

FROM -Y1- STA. 11+00.00 TO 11+94.74

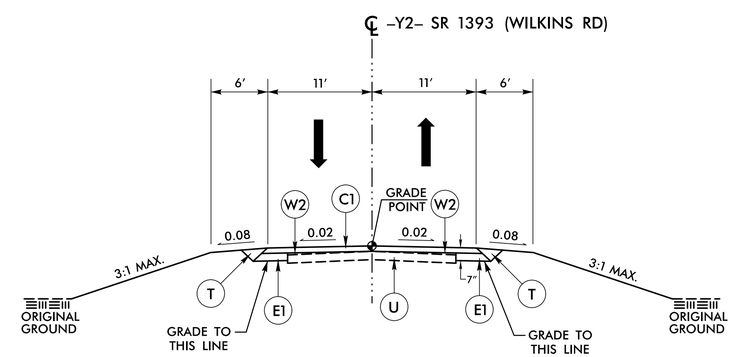

TYPICAL SECTION NO. 5

USE TYPICAL SECTION NO. 5:

FROM -Y2- STA. 10+12.00 TO 11+60.00

A1	7″ CONCRETE
C1	3″ S9.5B
C2	VAR. S9.5B
C3	2″ S9.5B
C4	3″ S9.5C
D1	4″ I19.0C
D2	VAR. I19.0C
E1	4″ B25.0C
E2	VAR. B25.0C
E3	7.25″ B25.0C
J1	6″ ABC
P	PRIME COAT
R1	8″X18″ CURB
R2	2′-6″ C&G
R3	MONO. CONC. ISL.
R4	SBG
R5	41″ BARRIER
T	EARTH MATERIAL
U	EXIST. PAVEMENT
V1	INC. MILLING
V2	RUMBLE STRIPS
W1	WEDGING
W2	WEDGING

3/9/2026
3:37:09 PM
C:\Users\NCDOT\B-5833\Roadway\Proj\b5833_rdy_typ.dgn
(lwlowery)

Docusign Envelope ID: 3C666FE1-3509-464A-A66A-3B885C7DF958

PROJECT REFERENCE NO.	SHEET NO.
B-5833	2A-3

ROADWAY DESIGN ENGINEER
NORTH CAROLINA PROFESSIONAL SEAL 027418 ENGINEER
MARCUS LOWERY
3/9/2026

PAVEMENT DESIGN ENGINEER
NORTH CAROLINA PROFESSIONAL SEAL 044590 ENGINEER
ANDREW D. WARGO
3/10/2026

DOCUMENT NOT CONSIDERED FINAL UNLESS ALL SIGNATURES COMPLETED

TGS ENGINEERS
706 HILLSBOROUGH ST. SUITE 200
RALEIGH, NC 27603
PH (919) 773-8887
CORP. LICENSE NO.: C-0275

A1	7" CONCRETE
C1	3" S9.5B
C2	VAR. S9.5B
C3	2" S9.5B
C4	3" S9.5C
D1	4" I19.0C
D2	VAR. I19.0C
E1	4" B25.0C
E2	VAR. B25.0C
E3	7.25" B25.0C
J1	6" ABC
P	PRIME COAT
R1	8"X18" CURB
R2	2'-6" C&G
R3	MONO. CONC. ISL.
R4	SBG
R5	41" BARRIER
T	EARTH MATERIAL
U	EXIST. PAVEMENT
V1	INC. MILLING
V2	RUMBLE STRIPS
W1	WEDGING
W2	WEDGING

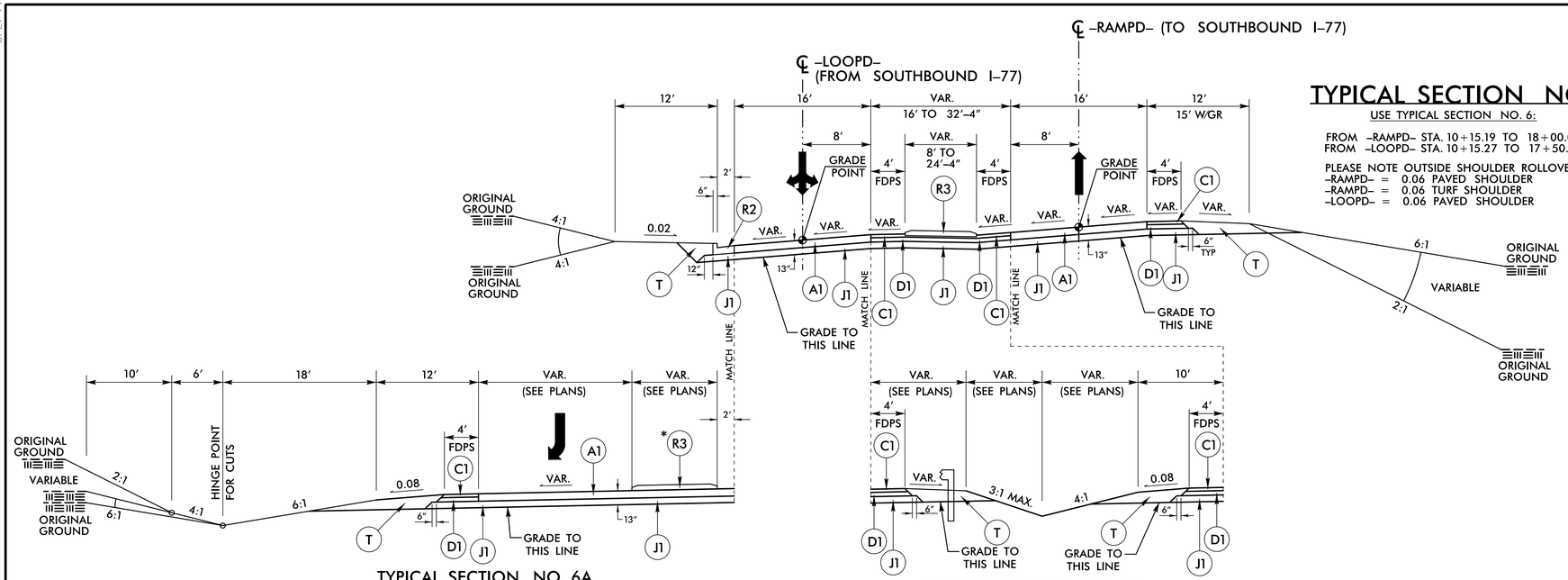

TYPICAL SECTION NO. 6

USE TYPICAL SECTION NO. 6:

FROM -RAMPD- STA. 10+15.19 TO 18+00.00
FROM -LOOPD- STA. 10+15.27 TO 17+50.00

PLEASE NOTE OUTSIDE SHOULDER ROLLOVERS (PER DIRECTION OF TRAVEL):
-RAMPD- = 0.06 PAVED SHOULDER
-RAMPD- = 0.06 TURF SHOULDER
-LOOPD- = 0.06 PAVED SHOULDER

TYPICAL SECTION NO. 6A

USE TYPICAL SECTION 6A:

FROM -LOOPD- STA. 10+15.27 TO 11+31.00

* MONOLITHIC CONC. ISLAND -LOOPD- STA. 10+26.77 TO 10+72.83
(SURFACE MOUNTED SINCE ON CONCRETE PAVEMENT)

TYPICAL SECTION NO. 6B

USE TYPICAL SECTION 6B:

FROM -RAMPD- STA. 16+41.09 TO 18+00.00
FROM -LOOPD- STA. 15+80.00 TO 17+50.00

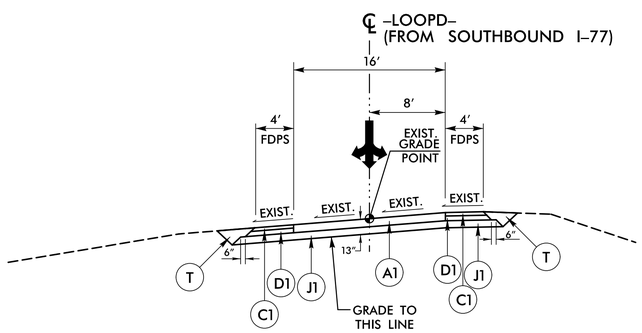

TYPICAL SECTION NO. 7

USE TYPICAL SECTION NO. 7:

REMOVE AND REPLACE PAVEMENT
FROM -LOOPD- STA. 17+50.00 TO 19+51.35

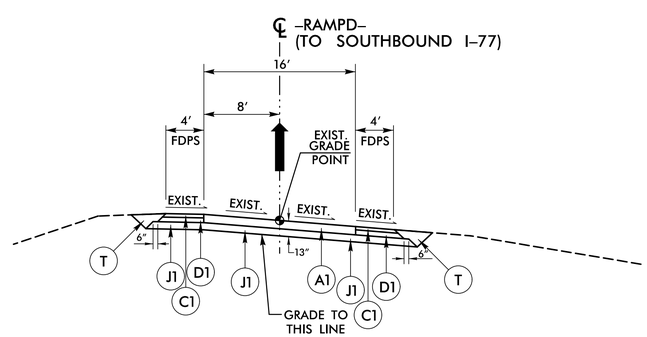

TYPICAL SECTION NO. 8

USE TYPICAL SECTION NO. 8:

REMOVE AND REPLACE PAVEMENT
FROM -RAMPD- STA. 18+00.00 TO 22+38.90

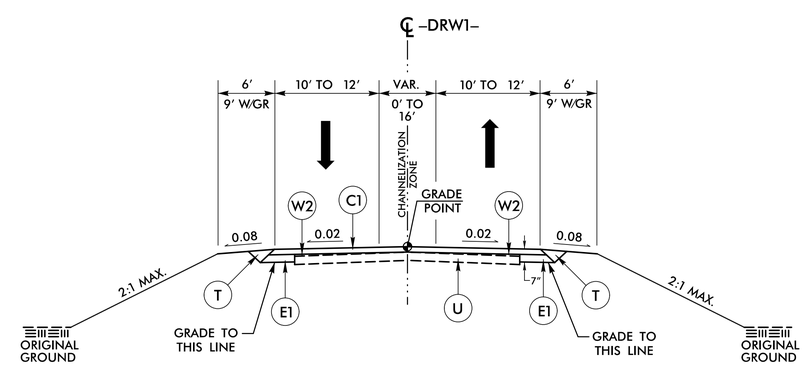

TYPICAL SECTION NO. 9

USE TYPICAL SECTION NO. 9:

FROM -DRW1- STA. 10+50.00 TO 15+26.56
(WEDGING FROM 10+50.00 TO 11+00.00 ONLY)

6/2/99
3/9/2026
C:\Projects\NCDOT\B-5833\Roadway\Proj\b5833_rdy_typ.dgn
(Marcus Lowery)

Docusign Envelope ID: 3C666FE1-3509-464A-A66A-3B885C7DF958

PROJECT REFERENCE NO.	SHEET NO.
B-5833	2A-4

ROADWAY DESIGN ENGINEER
3/9/2026

PAVEMENT DESIGN ENGINEER
3/10/2026

DOCUMENT NOT CONSIDERED FINAL UNLESS ALL SIGNATURES COMPLETED

TGS ENGINEERS
706 HILLSBOROUGH ST. SUITE 200
RALEIGH, NC 27603
PH (919) 773-8887
CORP. LICENSE NO.: C-0275

A1	7" CONCRETE
C1	3" S9.5B
C2	VAR. S9.5B
C3	2" S9.5B
C4	3" S9.5C
D1	4" I19.0C
D2	VAR. I19.0C
E1	4" B25.0C
E2	VAR. B25.0C
E3	7.25" B25.0C
J1	6" ABC
P	PRIME COAT
R1	8"X18" CURB
R2	2'-6" C&G
R3	MONO. CONC. ISL.
R4	SBG
R5	41" BARRIER
T	EARTH MATERIAL
U	EXIST. PAVEMENT
V1	INC. MILLING
V2	RUMBLE STRIPS
W1	WEDGING
W2	WEDGING

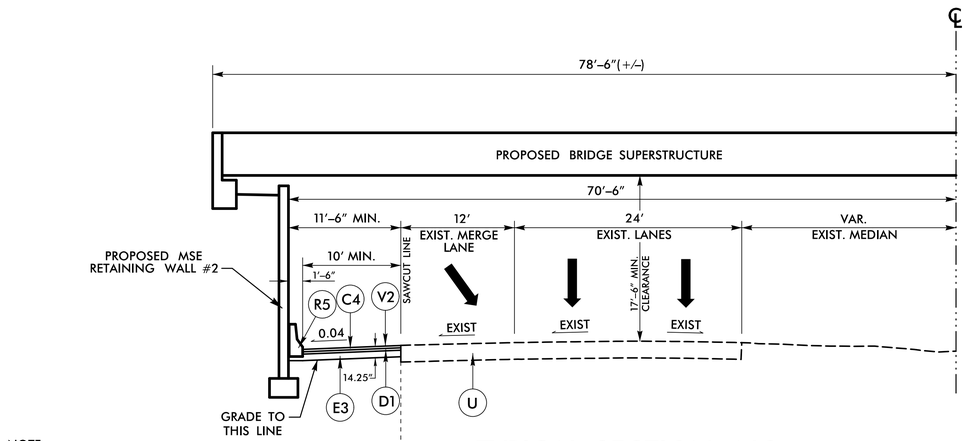

TYPICAL SECTION NO. 11

USE TYPICAL SECTION NO. 11:

FROM -Y3- STA. 13+86.88 TO 19+08.35 LT
NOTE: RETAINING WALL -Y3- STA 15+19.22 TO 17+29.49 LT

NOTE:
DO NOT DISTURB EXISTING SHOULDER DRAINS WHICH ARE EXPECTED TO BE ENCOUNTERED IN THE SHOULDER DIRECTLY ADJACENT TO THE EXISTING TRAVEL LANE. SHOULDER DRAIN QUANTITIES IN CONTRACT ARE FOR CONTINGENCY PURPOSES ONLY.

NOTE:
— USE FOR FILL SECTION
— SEE TYP. SECTION NO. 10 FOR CUT SECTION

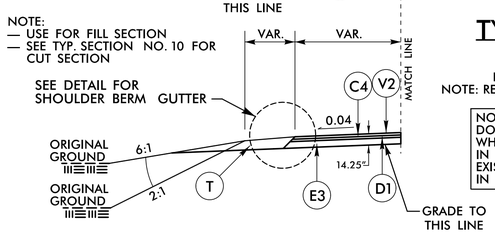

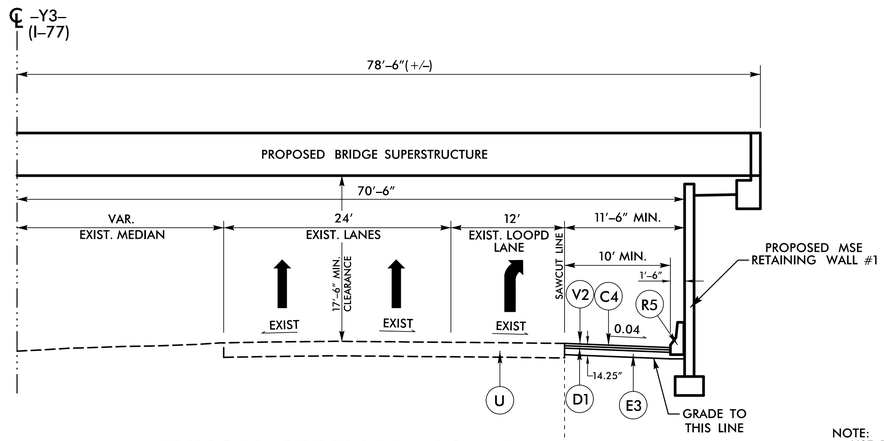

TYPICAL SECTION NO. 10

USE TYPICAL SECTION NO. 10:

FROM -Y3- STA. 11+93.13 TO 16+75.99 RT
NOTE: RETAINING WALL -Y3- STA 13+40.69 TO 15+52.73 RT

NOTE:
DO NOT DISTURB EXISTING SHOULDER DRAINS WHICH ARE EXPECTED TO BE ENCOUNTERED IN THE SHOULDER DIRECTLY ADJACENT TO THE EXISTING TRAVEL LANE. SHOULDER DRAIN QUANTITIES IN CONTRACT ARE FOR CONTINGENCY PURPOSES ONLY.

NOTE:
— USE FOR CUT SECTION
— SEE TYP. SECTION NO. 11 FOR FILL SECTION

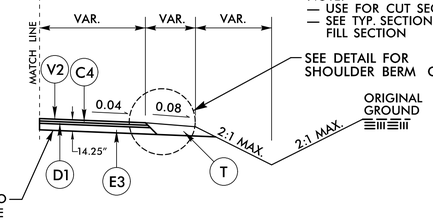

* MONOLITHIC CONC. ISLAND -RAMPA- STA. 10+23.50 TO 10+78.53 (SURFACE MOUNTED SINCE CONCRETE PAVEMENT)

** MONOLITHIC CONC. ISLAND -LOOPA- STA. 10+32.00 TO 11+25.00

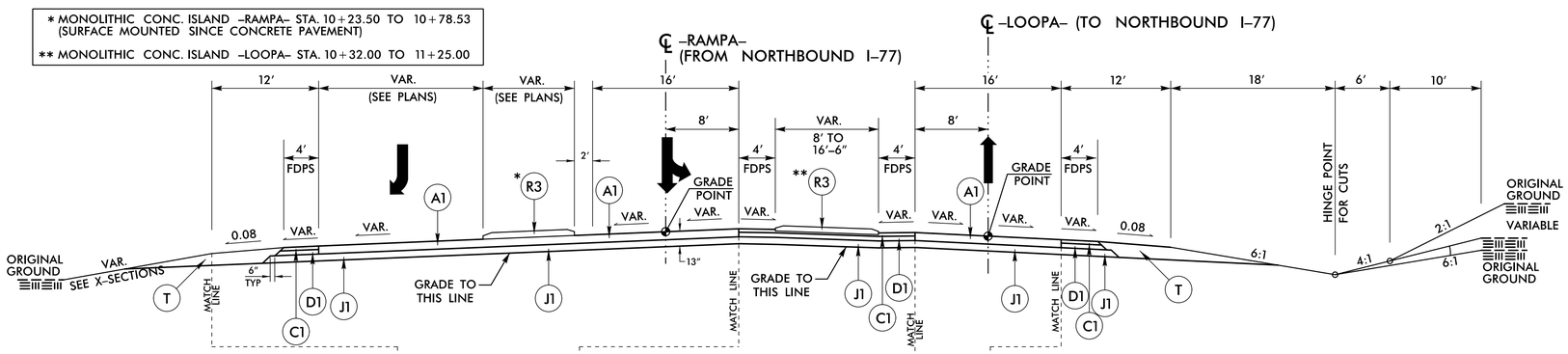

TYPICAL SECTION NO. 12

USE TYPICAL SECTION NO. 12:

FROM -LOOPA- STA. 10+14.76 TO 12+00.00
FROM -RAMPA- STA. 10+14.77 TO 12+01.25

PLEASE NOTE OUTSIDE SHOULDER ROLLOVERS (PER DIRECTION OF TRAVEL):
-RAMPA- = 0.06 PAVED SHOULDER
-RAMPA- = 0.06 TURF SHOULDER
-LOOPA- = 0.06 PAVED SHOULDER

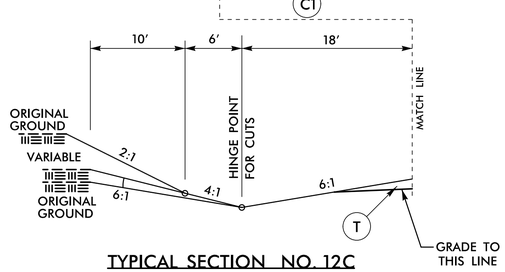

TYPICAL SECTION NO. 12C

USE TYPICAL SECTION 12C:

FOR CUT SECTION

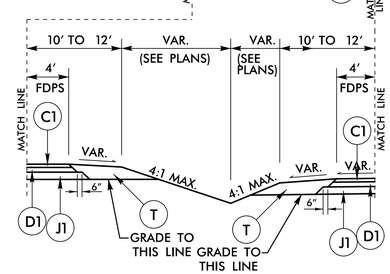

TYPICAL SECTION NO. 12B

USE TYPICAL SECTION 12B:

FROM -LOOPA- STA. 11+25.00 TO 12+00.00

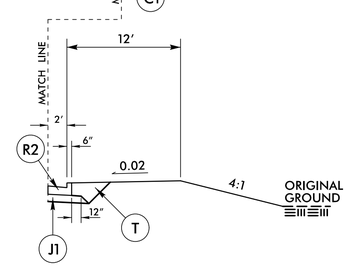

TYPICAL SECTION NO. 12A

USE TYPICAL SECTION 12A:

FROM -LOOPA- STA. 11+42.35 TO 12+00.00

6/2/99
3/9/2026
C:\Pwworking\ts\NCDOT\B-5833\Roadway\Proj\b5833_rdy_typ.dgn
(Martin, Lowell)

Docusign Envelope ID: 3C666FE1-3509-464A-A66A-3B885C7DF958

6/2/99

PROJECT REFERENCE NO.	SHEET NO.
B-5833	2A-5

ROADWAY DESIGN ENGINEER
NORTH CAROLINA PROFESSIONAL SEAL 027418 ENGINEER J. MARCUS LOWERY
3/9/2026

PAVEMENT DESIGN ENGINEER
NORTH CAROLINA PROFESSIONAL SEAL 044590 ENGINEER ANDREW D. WARGO
3/10/2026

DOCUMENT NOT CONSIDERED FINAL UNLESS ALL SIGNATURES COMPLETED

TGS ENGINEERS
706 HILLSBOROUGH ST. SUITE 200
RALEIGH, NC 27603
PH (919) 773-8887
CORP. LICENSE NO.: C-0275

A1	7" CONCRETE
C1	3" S9.5B
C2	VAR. S9.5B
C3	2" S9.5B
C4	3" S9.5C
D1	4" I19.0C
D2	VAR. I19.0C
E1	4" B25.0C
E2	VAR. B25.0C
E3	7.25" B25.0C
J1	6" ABC
P	PRIME COAT
R1	8"X18" CURB
R2	2'-6" C&G
R3	MONO. CONC. ISL.
R4	SBG
R5	41" BARRIER
T	EARTH MATERIAL
U	EXIST. PAVEMENT
V1	INC. MILLING
V2	RUMBLE STRIPS
W1	WEDGING
W2	WEDGING

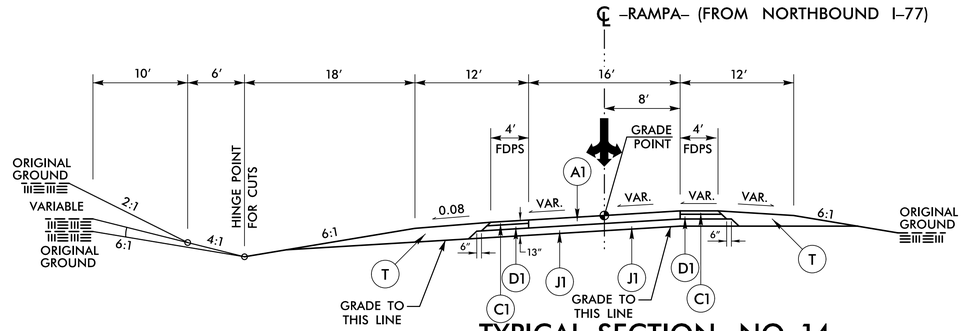

TYPICAL SECTION NO. 14

USE TYPICAL SECTION NO. 14:

FROM –RAMPA– STA. 12+01.25 TO 15+50.00

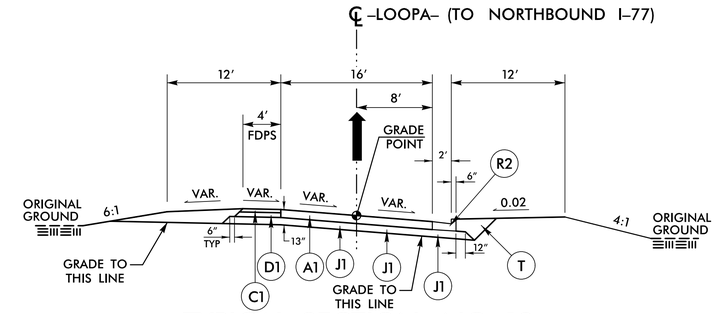

TYPICAL SECTION NO. 13

USE TYPICAL SECTION NO. 13:

FROM –LOOPA– STA. 12+00.00 TO 14+50.00

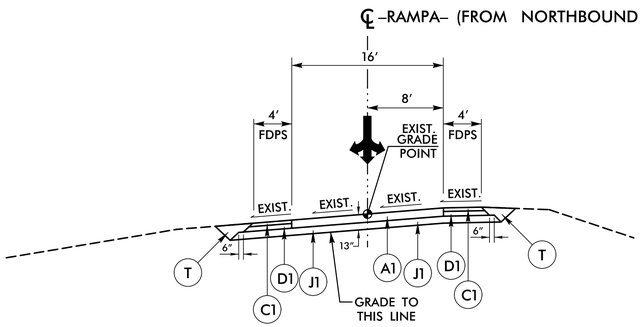

TYPICAL SECTION NO. 16

USE TYPICAL SECTION NO. 16:

REMOVE AND REPLACE PAVEMENT
FROM –RAMPA– STA. 15+50.00 TO 16+80.42

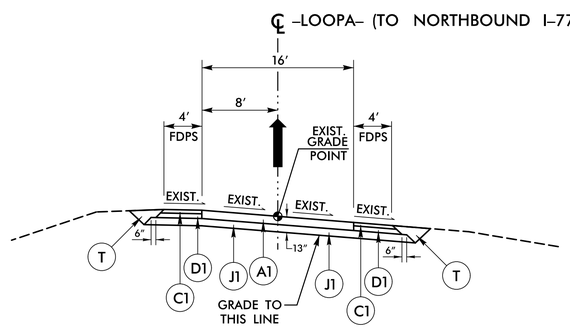

TYPICAL SECTION NO. 15

USE TYPICAL SECTION NO. 15:

REMOVE AND REPLACE PAVEMENT
FROM –LOOPA– STA. 14+50.00 TO 14+80.93

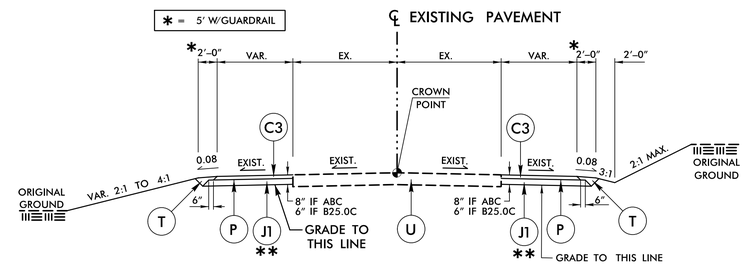

TYPICAL SECTION NO. 18

USE TYPICAL SECTION NO. 18:

AT TEMPORARY WIDENING LOCATIONS AS SHOWN IN THE WORK ZONE TRAFFIC CONTROL PLANS.

DIMENSIONS SHOWN ARE MINIMUMS AND SUBJECT TO CHANGE AS DIRECTED BY THE ENGINEER TO SUIT FIELD CONDITIONS.

WIDENING IS SHOWN ON BOTH SIDES OF THE TYPICAL TO REFLECT THE CUT AND FILL SECTIONS, HOWEVER, ACTUAL TEMPORARY WIDENING WILL TYPICALLY OCCUR ONLY ON ONE SIDE OF THE EXISTING PAVEMENT AT ONE TIME – SEE THE TRAFFIC CONTROL PLANS FOR PHASING.

** NOTE:
FOR TEMPORARY PAVEMENT, IN AREAS OF NARROW WIDENING, 4.0″ OF B25.0C MAY BE USED IN LIEU OF THE 6.0″ OF ABC IN WHICH CASE THE PRIME COAT IS NOT NEEDED.

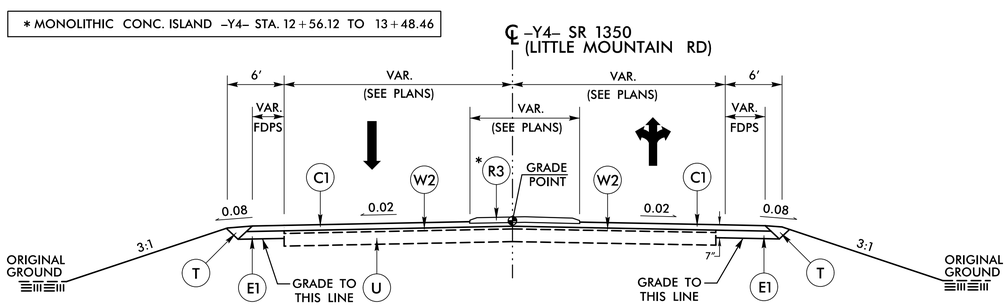

TYPICAL SECTION NO. 17

USE TYPICAL SECTION NO. 17:

FROM –Y4– STA. 12+30.00 TO 13+61.91

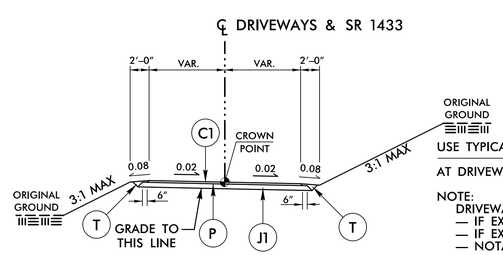

TYPICAL SECTION NO. 19

USE TYPICAL SECTION NO. 19:

AT DRIVEWAY LOCATIONS TO THE DIMENSIONS SHOWN IN THE PLANS OR AS DIRECTED BY THE ENGINEER.

NOTE:
DRIVEWAY PAVEMENT TO BE REPLACED "IN KIND".
— IF EXISTING DRIVEWAY IS GRAVEL, REPLACE WITH 6" ABC.
— IF EXISTING DRIVEWAY IS ASPHALT, REPLACE WITH 3" S9.5B ON 6" ABC (PER THE TYPICAL SHOWN).
— NOTABLE EXCEPTION: IF PROPOSED DRIVEWAY GRADE IS >7%, PAVE WITH 3" S9.5B ON 8" ABC.

— IF EXISTING DRIVEWAY IS CONCRETE, REPLACE WITH AT LEAST 6" JOINTED CONCRETE REINFORCED WITH WIRE MESH.

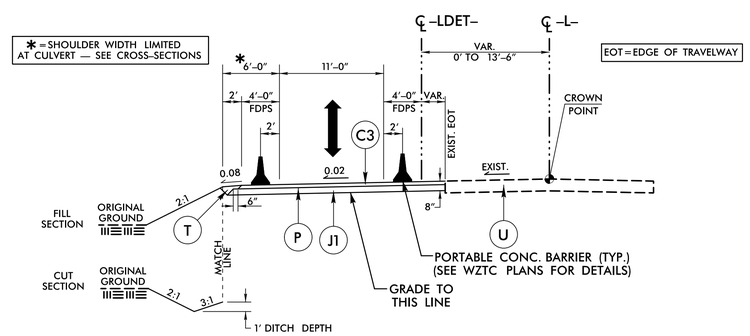

TYPICAL SECTION NO. 20

USE TYPICAL SECTION NO. 20:

FROM –LDET– STA. 10+00.00 TO 14+96.35

3/9/2026
J:\PROJECTS\NCDOT\B-5833\Roadway\Proj\b5833_rdy_typ.dgn
(lsermitsiadis)

Docusign Envelope ID: E03116D9-9111-4A69-87F1-46AF0CF86082

8/17/99

SEE SHEET 04 FOR –L– PLAN VIEW

SEE SHEET 2A–5 FOR –LDET– TYPICAL SECTION

SEE SHEETS X–49 & FOLLOWING FOR –LDET– CROSS–SECTIONS

DRIVE RADII ARE 10' UNLESS OTHERWISE NOTED
CHANNELIZATION RADII ARE 3' UNLESS OTHERWISE NOTED
RADII DIMENSIONS ARE TO FACE OF CURB (F/C) UNLESS OTHERWISE NOTED

–LDET–

PI Sta 10+36.90	PI Sta 11+10.49
Δ = 10° 32' 26.8" (LT)	Δ = 10° 32' 26.8" (RT)
D = 14° 19' 26.2"	D = 14° 19' 26.2"
L = 73.59'	L = 73.59'
T = 36.90'	T = 36.90'
R = 400.00'	R = 400.00'
SE = SEE PLANS	SE = SEE PLANS
PI Sta 13+86.08	PI Sta 14+59.66
Δ = 10° 32' 26.8" (RT)	Δ = 10° 32' 26.8" (LT)
D = 14° 19' 26.2"	D = 14° 19' 26.2"
L = 73.59'	L = 73.59'
T = 36.90'	T = 36.90'
R = 400.00'	R = 400.00'
SE = SEE PLANS	SE = SEE PLANS

–L–

PI Sta 17+87.66	PI Sta 22+16.73
Δ = 6° 34' 02.4" (LT)	Δ = 13° 17' 34.0" (RT)
D = 3° 47' 39.9"	D = 3° 47' 39.9"
L = 173.08'	L = 350.32'
T = 86.63'	T = 175.95'
R = 1,510.00'	R = 1,510.00'
SE = 0.05	SE = 0.05
Lr = 125'	Lr = 125'

–Y1–

PI Sta 10+91.08
Δ = 18° 34' 00.1" (RT)
D = 17° 37' 46.1"
L = 105.32'
T = 53.12'
R = 325.00'

–Y2–

PI Sta 12+09.78
Δ = 48° 13' 26.2" (LT)
D = 25° 48' 32.1"
L = 186.85'
T = 99.36'
R = 222.00'

① = –L– POC Sta.18+61.28= –Y1– POT Sta. 12+06.74

② = –L– POC Sta.18+64.39= –Y2– POT Sta. 10+00.00

③ = –L– PT Sta. 18+74.11

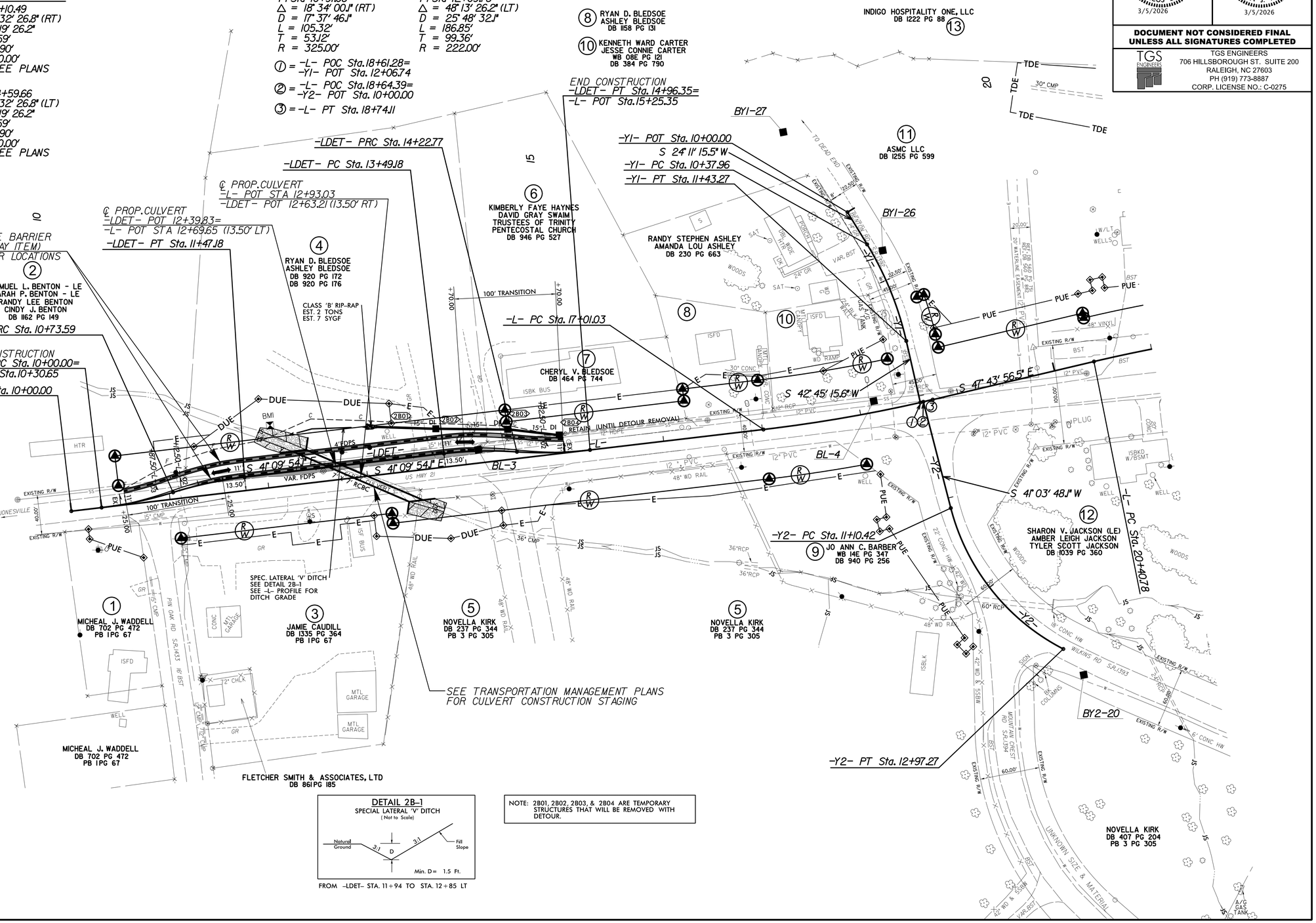

DETAIL 2B–1
SPECIAL LATERAL 'V' DITCH
(Not to Scale)

FROM –LDET– STA. 11+94 TO STA. 12+85 LT

NOTE: 2B01, 2B02, 2B03, & 2B04 ARE TEMPORARY STRUCTURES THAT WILL BE REMOVED WITH DETOUR.

–LDET–

PROJECT REFERENCE NO.	SHEET NO.
B-5833	2B-1
R/W SHEET NO.	

ROADWAY DESIGN ENGINEER
NORTH CAROLINA PROFESSIONAL SEAL 027418 ENGINEER MARCUS LOVKERY
DocuSigned by: Marcus Lovkery 3E97CBE0B0A8A8...
3/5/2026

HYDRAULICS ENGINEER
NORTH CAROLINA PROFESSIONAL SEAL 044158 ENGINEER BENJAMIN J. HERNCAR
DocuSigned by: Benjamin J. Hernicar D7B0A8A8A8A8...
3/5/2026

DOCUMENT NOT CONSIDERED FINAL UNLESS ALL SIGNATURES COMPLETED

TGS ENGINEERS
706 HILLSBOROUGH ST. SUITE 200
RALEIGH, NC 27603
PH (919) 773-8887
CORP. LICENSE NO.: C-0275

2/27/2026
J:\PROJECTS\NCDOT\B-5833\Roadway\Proj\b5833_rdy_psh_2b-1.dgn
(Jeremy Cowell)

Docusign Envelope ID: B3B9E834-BD03-47B3-8EA5-E959DB7E67C2

8/17/99

REVISIONS

INTERSECTION DETAILS

PROJECT REFERENCE NO.	SHEET NO.
B-5833	2B-2
R/W SHEET NO.	

ROADWAY DESIGN ENGINEER

NORTH CAROLINA PROFESSIONAL SEAL 027418 ENGINEER MARCUS LOWERY

DocuSigned by: Marcus Lowery 3/5/2026

DOCUMENT NOT CONSIDERED FINAL UNLESS ALL SIGNATURES COMPLETED

TGS ENGINEERS
706 HILLSBOROUGH ST. SUITE 200
RALEIGH, NC 27603
PH (919) 773-8887
CORP. LICENSE NO.: C-0275

SCALE 0 50 100

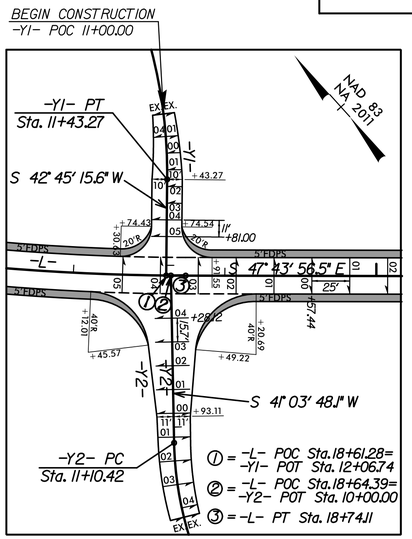

US 21 BUS (-L-)/
(-Y1-) INTERSECTION DETAIL
SEE SHEET 04 FOR PLAN VIEW

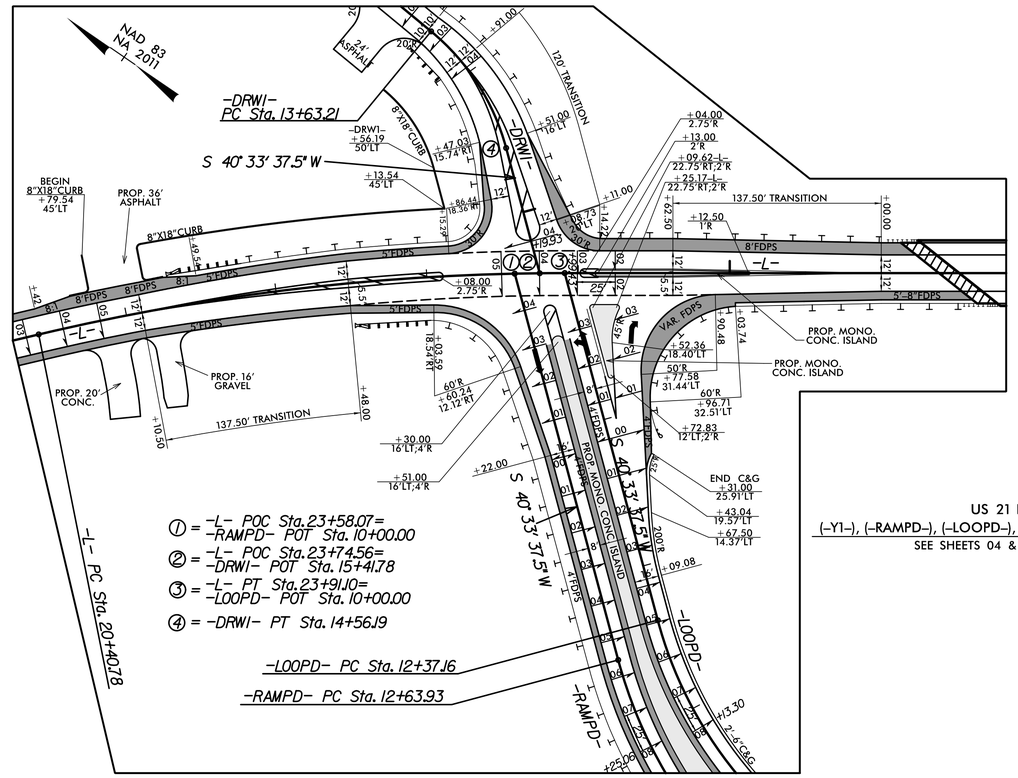

US 21 BUS (-L-)/
(-Y1-), (-RAMPD-), (-LOOPD-), (-DRW1-) INTERSECTION DETAIL
SEE SHEETS 04 & 05 FOR PLAN VIEW

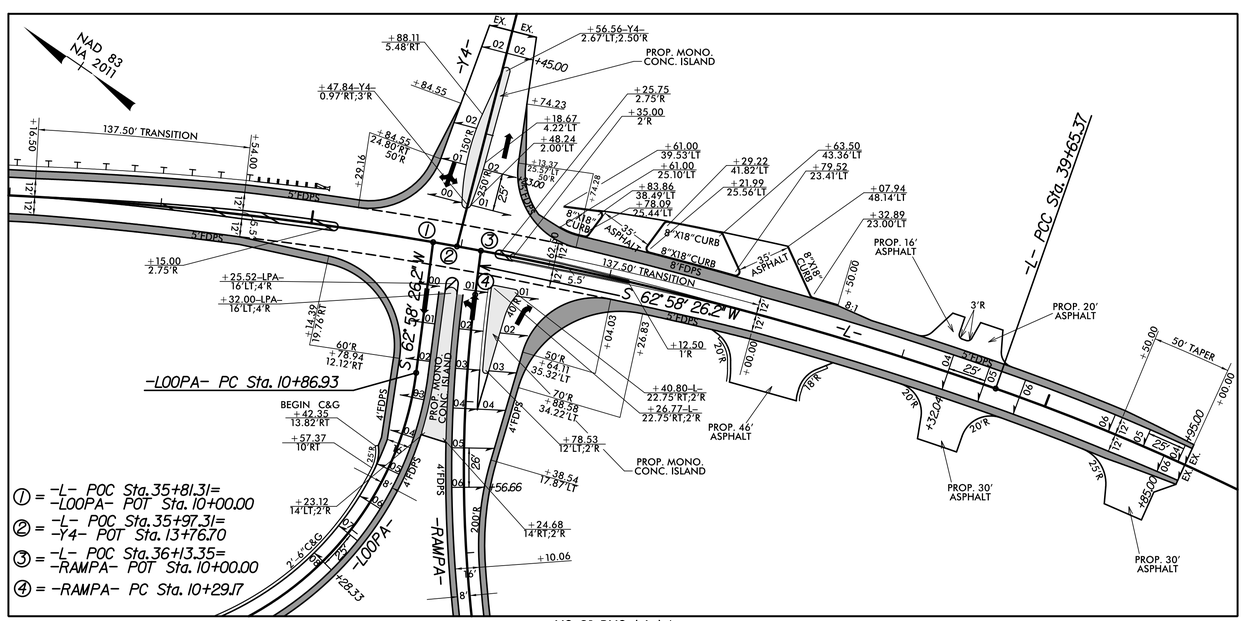

US 21 BUS (-L-)/
(-Y4-), (-RAMPA-), (-LOOPA-) INTERSECTION DETAIL
SEE SHEETS 04 & 05 FOR PLAN VIEW

DRIVE RADII ARE 10' UNLESS OTHERWISE NOTED
CHANNELIZATION RADII ARE 3' UNLESS OTHERWISE NOTED
RADII DIMENSIONS ARE TO FACE OF CURB (F/C) UNLESS OTHERWISE NOTED

8/3/2023
C:\Projects\NCDOT\B-5833\Roadway\Proj\b5833_rdy_psh_2b-2.dgn
(Sterling Cowell)

Docusign Envelope ID: 41D44578-A63F-46D2-B6D5-C24D648C528D

PROJECT REFERENCE NO.	SHEET NO.
B-5833	2C-1

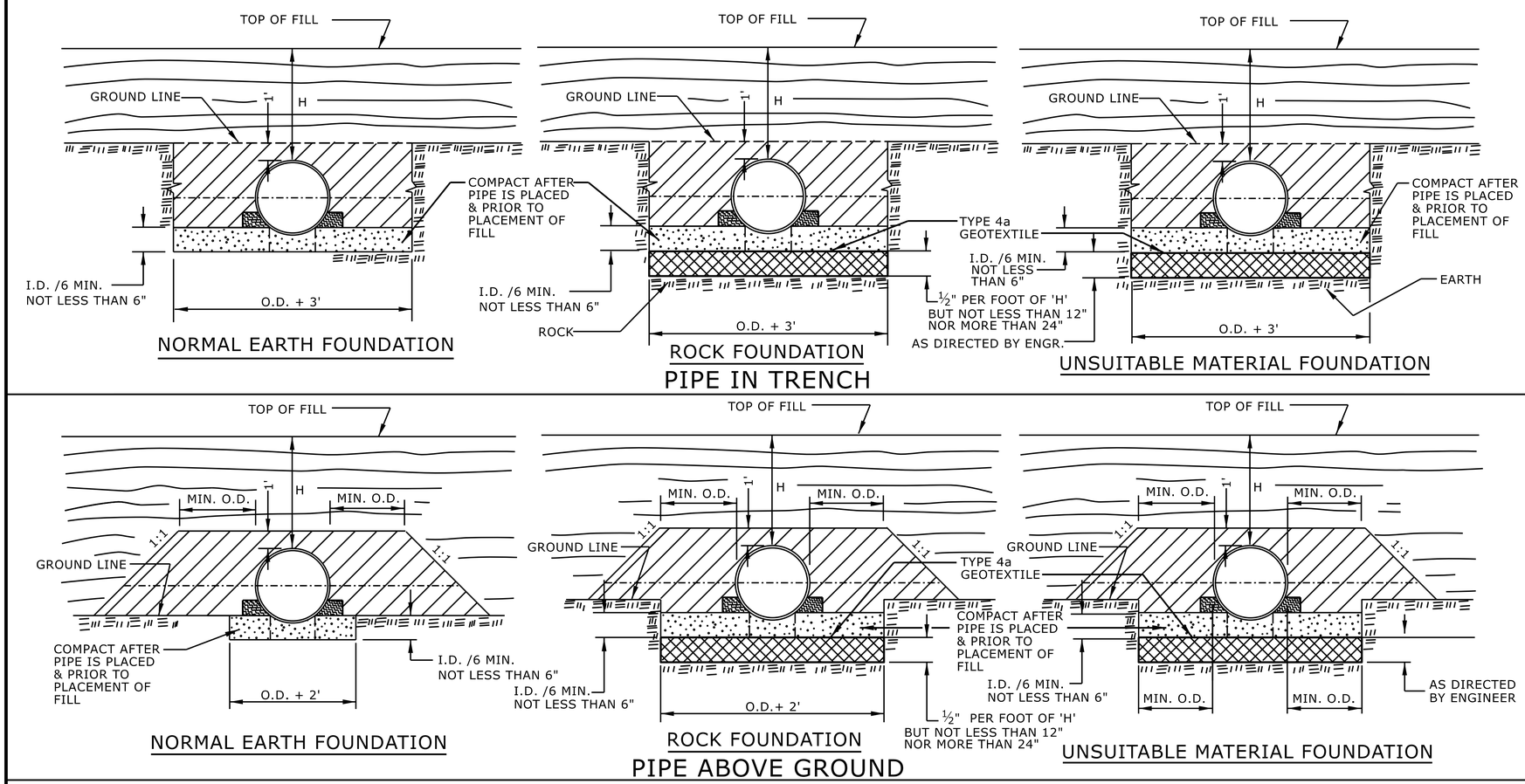

GENERAL NOTES:

I.D. = THE MAXIMUM HORIZONTAL INSIDE DIAMETER DIMENSION.

O.D. = THE MAXIMUM HORIZONTAL OUTSIDE DIAMETER DIMENSION.

H = THE FILL HEIGHT MEASURED VERTICALLY AT ANY POINT ALONG THE PIPE FROM THE TOP OF THE PIPE TO THE TOP OF THE EMBANKMENT AT THAT POINT.

APPROVED SUITABLE LOCAL MATERIAL.

TAKE CARE TO FULLY COMPACT HAUNCH ZONE OF PIPE BACKFILL.

LOOSELY PLACED SELECT MATERIAL CLASS III OR CLASS II, TYPE 1 FOR PIPE BEDDING. LEAVE SECTION DIRECTLY BENEATH PIPE UNCOMPACTED AS PIPE SEATING AND BACKFILL WILL ACCOMPLISH COMPACTION.

DO NOT OPERATE HEAVY EQUIPMENT OVER ANY PIPE CULVERT UNTIL THE PIPE CULVERT HAS BEEN PROPERLY BACKFILLED AND COVERED WITH AT LEAST 3 FEET OF APPROVED MATERIAL.

REFER TO NCDOT PIPE MATERIAL SELECTION GUIDE AND STANDARD SPECIFICATIONS FOR ALLOWABLE PIPE FILL HEIGHTS AND PIPE SPECIFICATIONS.

SPRINGLINE OF PIPE

SELECT BACKFILL MATERIAL CLASS III OR CLASS II, TYPE 1 ABOVE AND BELOW SPRINGLINE.

UNDISTURBED EARTH MATERIAL

SELECT MATERIAL CLASS V OR VI FOR FOUNDATION CONDITIONING. ENCAPSULATE WITH TYPE IV GEOTEXTILE AS DIRECTED BY THE ENGINEER.

STATE OF NORTH CAROLINA
DEPT. OF TRANSPORTATION
DIVISION OF HIGHWAYS
RALEIGH, N.C.

ROADWAY DETAIL DRAWING FOR

METHOD OF PIPE INSTALLATION

FLEXIBLE PIPE

NORTH CAROLINA PROFESSIONAL SEAL 033144 ENGINEER NICOLE M. HACKLER

3/5/2026

SHEET 1 OF 2

300.01

DOCUMENT NOT CONSIDERED FINAL UNLESS ALL SIGNATURES COMPLETED

CONTRACTS STANDARDS AND DEVELOPMENT UNIT

Office 919-707-6950 FAX 919-250-4119

SEE TITLE BLOCK

ORIGINAL BY: S.CALHOUN DATE: 7-25-2024
MODIFIED BY: DATE:
CHECKED BY: DATE:
FILE SPEC.:

Docusign Envelope ID: 41D44578-A63F-46D2-B6D5-C24D648C528D

PROJECT REFERENCE NO.	SHEET NO.
B-5833	2C-2

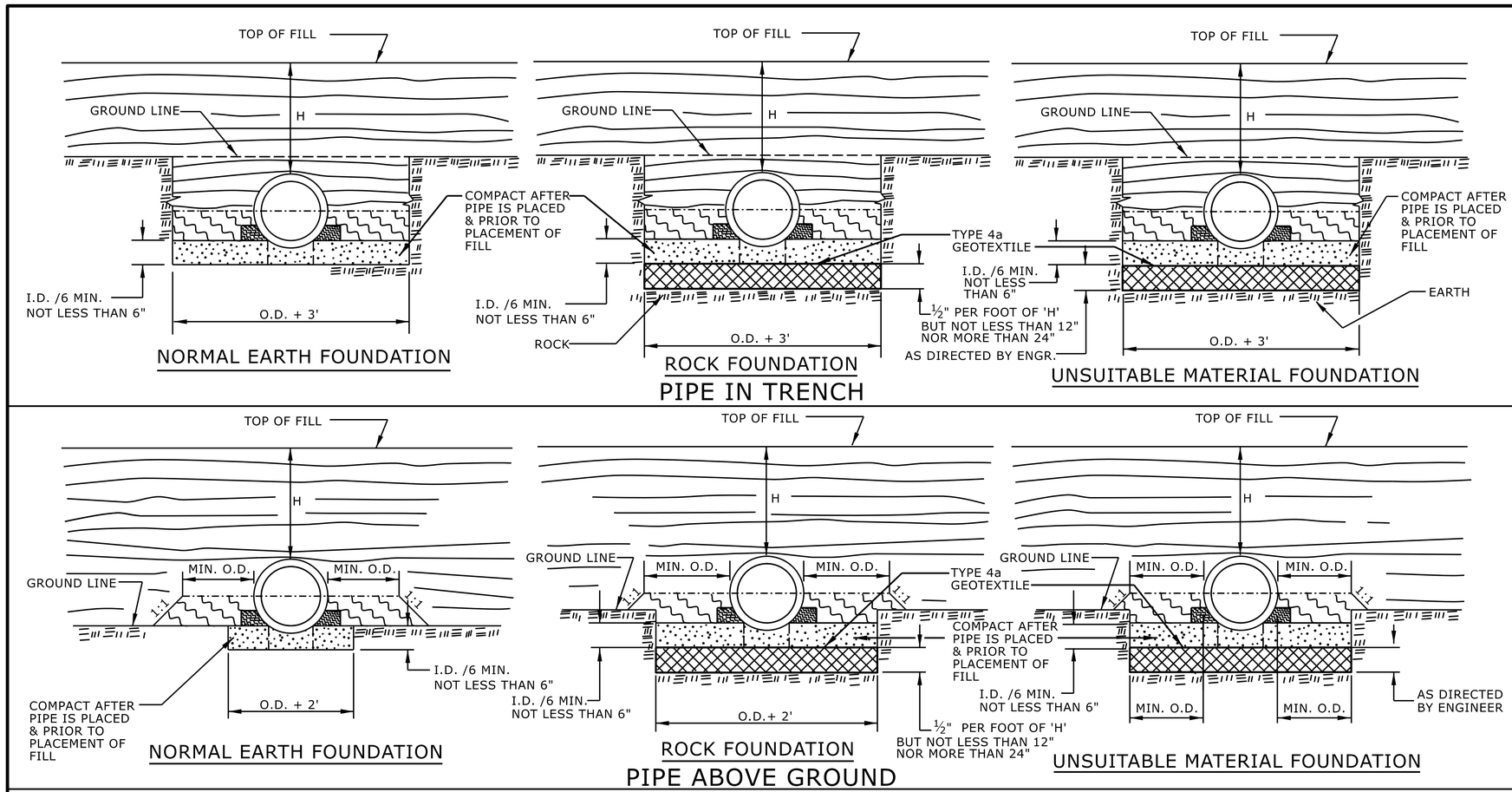

GENERAL NOTES:

I.D. = THE MAXIMUM HORIZONTAL INSIDE DIAMETER DIMENSION.

O.D. = THE MAXIMUM HORIZONTAL OUTSIDE DIAMETER DIMENSION.

H = THE FILL HEIGHT MEASURED VERTICALLY AT ANY POINT ALONG THE PIPE FROM THE TOP OF THE PIPE TO THE TOP OF THE EMBANKMENT AT THAT POINT.

APPROVED SUITABLE LOCAL MATERIAL.

TAKE CARE TO FULLY COMPACT HAUNCH ZONE OF PIPE BACKFILL.

LOOSELY PLACED SELECT MATERIAL CLASS III OR CLASS II, TYPE 1 FOR PIPE BEDDING. LEAVE SECTION DIRECTLY BENEATH PIPE UNCOMPACTED AS PIPE SEATING AND BACKFILL WILL ACCOMPLISH COMPACTION.

DO NOT OPERATE HEAVY EQUIPMENT OVER ANY PIPE CULVERT UNTIL THE PIPE CULVERT HAS BEEN PROPERLY BACKFILLED AND COVERED WITH AT LEAST 3 FEET OF APPROVED MATERIAL.

REFER TO NCDOT PIPE MATERIAL SELECTION GUIDE AND STANDARD SPECIFICATIONS FOR ALLOWABLE PIPE FILL HEIGHTS AND PIPE SPECIFICATIONS.

SPRINGLINE OF PIPE

SELECT BACKFILL MATERIAL CLASS III OR CLASS II, BELOW SPRINGLINE.

UNDISTURBED EARTH MATERIAL

SELECT MATERIAL CLASS V OR VI FOR FOUNDATION CONDITIONING. ENCAPSULATE WITH TYPE IV GEOTEXTILE AS DIRECTED BY THE ENGINEER.

STATE OF NORTH CAROLINA
DEPT. OF TRANSPORTATION
DIVISION OF HIGHWAYS
RALEIGH, N.C.

ROADWAY DETAIL DRAWING FOR

METHOD OF PIPE INSTALLATION

RIGID PIPE

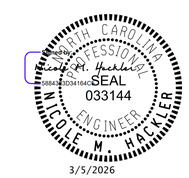

SHEET 2 OF 2

300.01

DOCUMENT NOT CONSIDERED FINAL UNLESS ALL SIGNATURES COMPLETED

CONTRACTS STANDARDS AND DEVELOPMENT UNIT
Office 919-707-6950 FAX 919-250-4119

SEE TITLE BLOCK

ORIGINAL BY: S.CALHOUN DATE: 7-25-2024
MODIFIED BY: DATE:
CHECKED BY: DATE:
FILE SPEC.:

Docusign Envelope ID: 41D44578-A63F-46D2-B6D5-C24D648C528D

PROJECT REFERENCE NO.	SHEET NO.
B-5833	2C-3

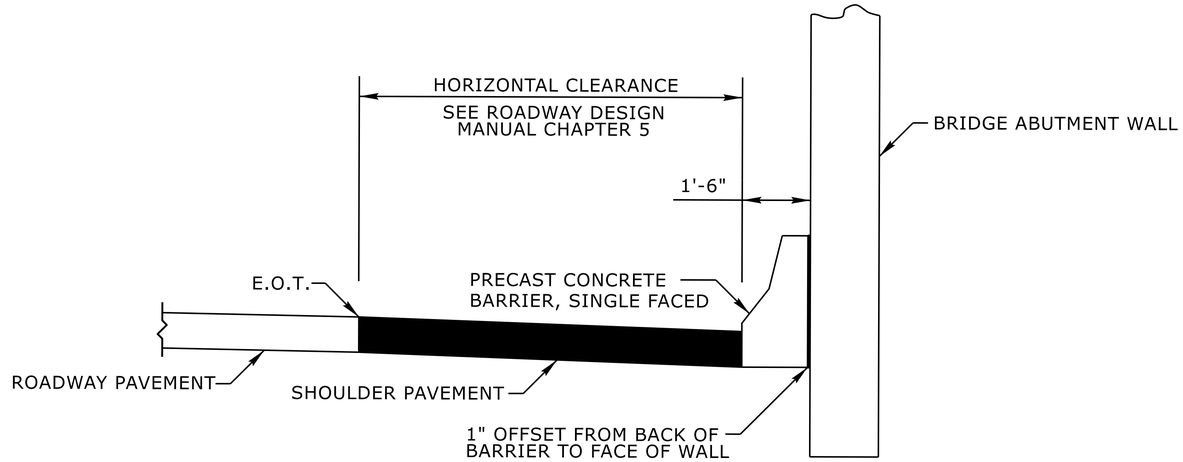

ELEVATION

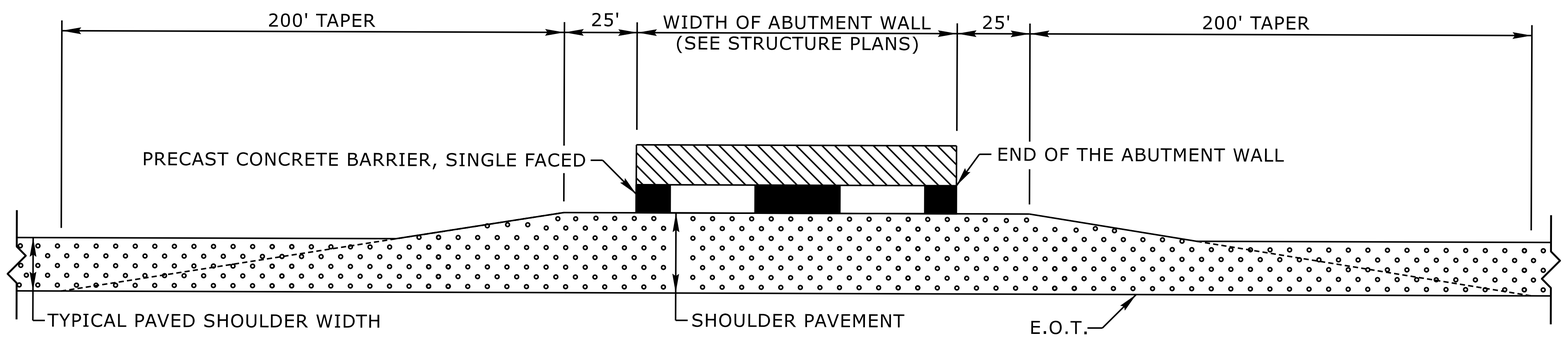

PLAN

NOTE:
1. SHOULDER PAVEMENT SHOULD BE CONSTRUCTED AS SHOWN IN THE PLANS WITH THE SAME PAVEMENT DESIGN USED ON THE PAVED SHOULDER APPROACHING THE STRUCTURE UNDERPASS.

STATE OF
NORTH CAROLINA
DEPT. OF TRANSPORTATION
DIVISION OF HIGHWAYS
RALEIGH, N.C.

ROADWAY DETAIL DRAWING FOR

GUIDE FOR PAVING SHOULDERS UNDER BRIDGES

METHOD IV

SHEET 1 OF 1

610D04

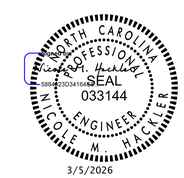

DOCUMENT NOT CONSIDERED FINAL UNLESS ALL SIGNATURES COMPLETED

CONTRACTS STANDARDS AND DEVELOPMENT UNIT
Office 919-707-6950 FAX 919-250-4119

SEE TITLE BLOCK

ORIGINAL BY: L.SMITH DATE: 9-17-2025
MODIFIED BY: DATE:
CHECKED BY: DATE:
FILE SPEC.:

Docusign Envelope ID: 41D44578-A63F-46D2-B6D5-C24D648C528D

PROJECT REFERENCE NO.	SHEET NO.
B-5833	2C-4

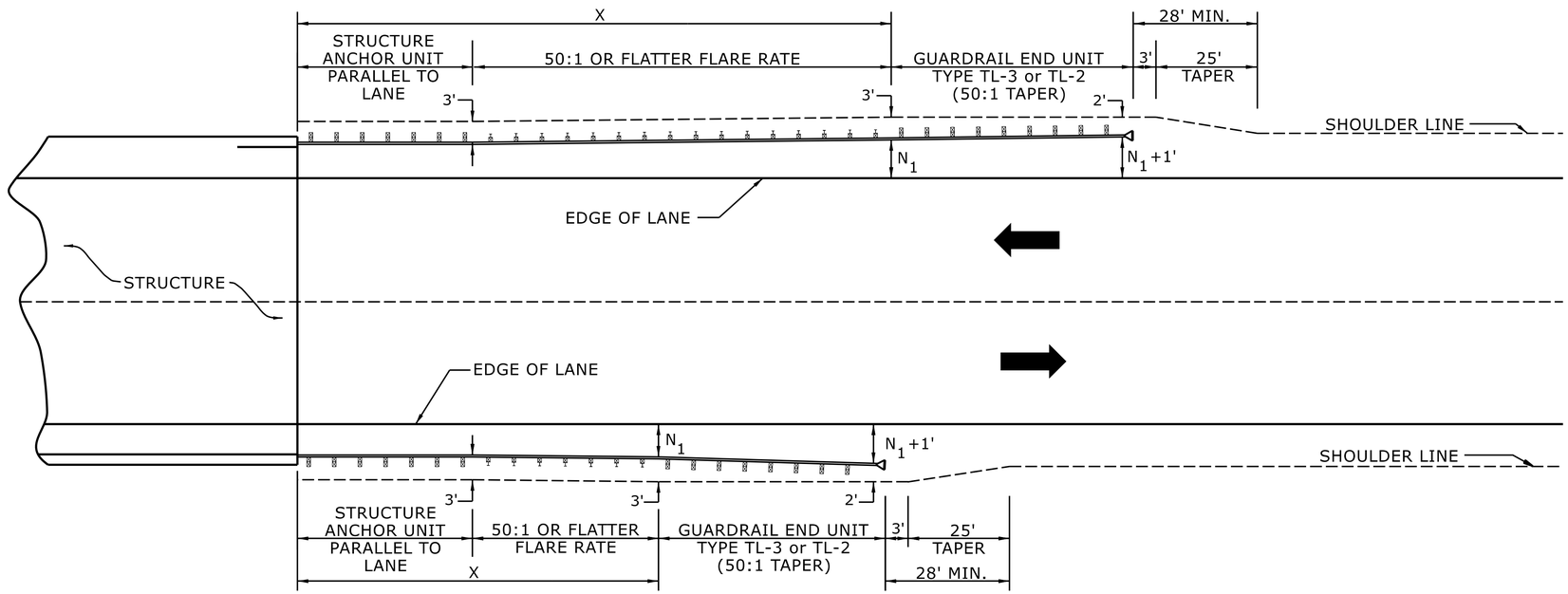

USE FLARE RATE AS THE CONTROL IF THE "N_1" DISTANCE IS NOT OBTAINED.
("N_1" IS BASED ON SHOULDER WIDTHS IN THE ROADWAY DESIGN MANUAL)

SEE STD. 862.03 FOR STRUCTURE ANCHOR UNITS

FOR POSTED SPEEDS ≥ 45MPH USE GREU TYPE TL-3
FOR POSTED SPEEDS < 45MPH USE GREU TYPE TL-2

GUARDRAIL LENGTH OF NEED (X) IS CALCULATED BASED ON THE AASHTO ROADSIDE DESIGN GUIDE.

LENGTHS AND OFFSETS FOR PROPOSED GUARDRAIL AT TWO LANE - TWO WAY LOCATIONS

STATE OF NORTH CAROLINA
DEPT. OF TRANSPORTATION
DIVISION OF HIGHWAYS
RALEIGH, N.C.

ROADWAY DETAIL DRAWING FOR
GUARDRAIL PLACEMENT

NORTH CAROLINA PROFESSIONAL SEAL 033144 ENGINEER NICOLE M. HACKLER
3/5/2026

SHEET 4 OF 15

862D01

DOCUMENT NOT CONSIDERED FINAL UNLESS ALL SIGNATURES COMPLETED

CONTRACTS STANDARDS AND DEVELOPMENT UNIT
Office 919-707-6950 FAX 919-250-4119

SEE TITLE BLOCK

ORIGINAL BY: S.CALHOUN DATE: 7-25-2024
MODIFIED BY: DATE:
CHECKED BY: DATE:
FILE SPEC.:

Docusign Envelope ID: 41D44578-A63F-46D2-B6D5-C24D648C528D

PROJECT REFERENCE NO.	SHEET NO.
B-5833	2C-5

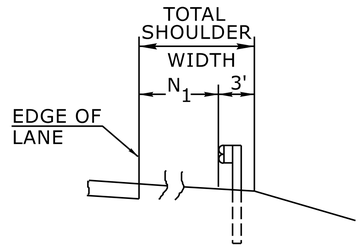

FILL SECTION

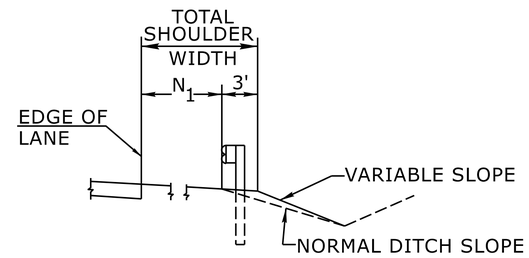

CUT SECTION

"N_1"= DISTANCE FROM EDGE OF LANE TO FACE OF GUARDRAIL WHERE GUARDRAIL IS PARALLEL TO LANE.

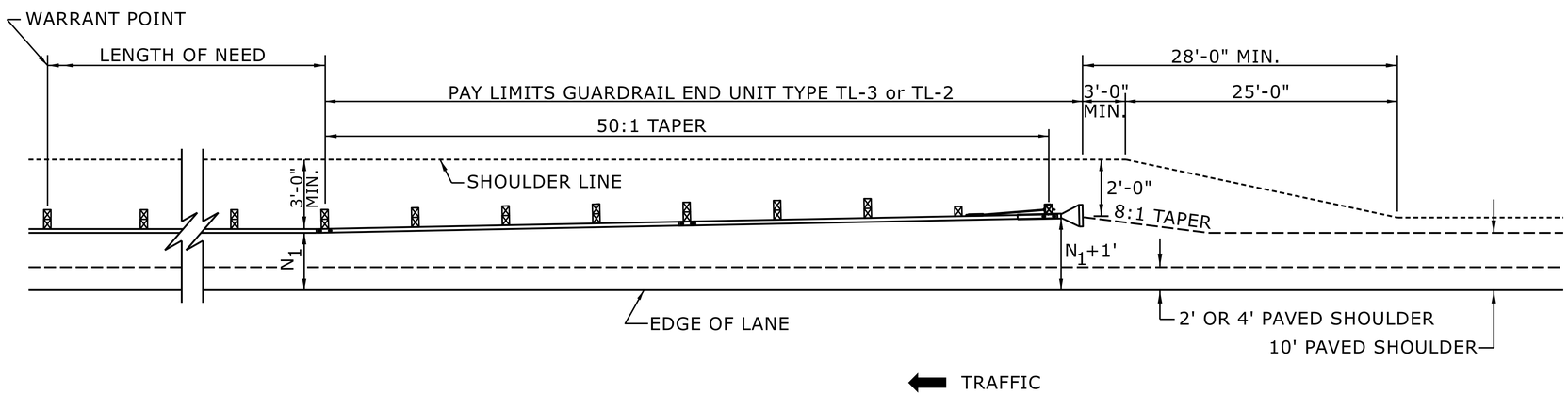

FOR POSTED SPEEDS ≥ 45mph USE GREU TYPE TL-3
FOR POSTED SPEEDS < 45mph USE GREU TYPE TL-2

DETAIL OF BEGINNING OF GUARDRAIL IN CUT OR FILL SECTION

STATE OF
NORTH CAROLINA
DEPT. OF TRANSPORTATION
DIVISION OF HIGHWAYS
RALEIGH, N.C.

ROADWAY DETAIL DRAWING FOR
GUARDRAIL PLACEMENT

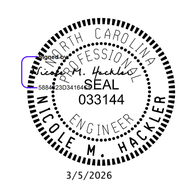

SHEET 6 OF 15

862D01

DOCUMENT NOT CONSIDERED FINAL
UNLESS ALL SIGNATURES COMPLETED

CONTRACTS STANDARDS AND DEVELOPMENT UNIT
Office 919-707-6950 FAX 919-250-4119

SEE TITLE BLOCK

ORIGINAL BY: S.CALHOUN DATE: 7-25-2024
MODIFIED BY: DATE:
CHECKED BY: DATE:
FILE SPEC.:

Docusign Envelope ID: 41D44578-A63F-46D2-B6D5-C24D648C528D

PROJECT REFERENCE NO.	SHEET NO.
B-5833	2C-6

NOTE: IF EXISTING GUARDRAIL IS LOWER THAN 29″, USE AN ADDITIONAL 12′-6″ LONG SECTION OF GUARDRAIL, FOR EVERY 1″ OF HEIGHT DIFFERENCE, TO TRANSITION FROM EXISTING GUARDRAIL TO PROPOSED 31″ GUARDRAIL.

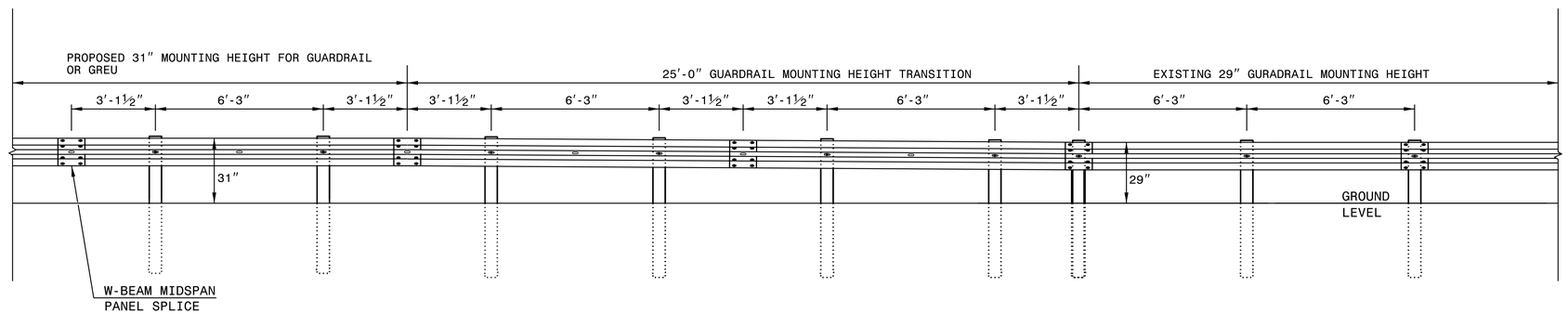

ELEVATION VIEW

TRANSITION FROM 29″ TO 31″ W-BEAM GUARDRAIL MOUNTING HEIGHT

STATE OF NORTH CAROLINA
DEPT. OF TRANSPORTATION
DIVISION OF HIGHWAYS
RALEIGH, N.C.

ROADWAY DETAIL DRAWING FOR
GUARDRAIL INSTALLATION

SHEET 5 OF 9

862D02

NORTH CAROLINA PROFESSIONAL SEAL 033144 ENGINEER NICOLE M. HACKLER

3/5/2026

DOCUMENT NOT CONSIDERED FINAL UNLESS ALL SIGNATURES COMPLETED

CONTRACTS STANDARDS AND DEVELOPMENT UNIT
Office 919-707-8950 FAX 919-250-4119

SEE TITLE BLOCK

ORIGINAL BY: K. Aldridge DATE: 02-25
MODIFIED BY: DATE:
CHECKED BY: DATE:
FILE SPEC.:

05-FEB-2025 07:53
U:\Special Details Revisions\862D02 Detail\862D02.dgn
$$$$USERNAME$$$$

Docusign Envelope ID: 5190BBEB-C1B1-49D6-A73E-E8FD674FBE1F

8/17/99

ENERGY DISSIPATOR BASIN #1 –RAMPD– 12+92 RT

(NOT TO SCALE)

PROJECT REFERENCE NO.	SHEET NO.
B-5833	2D-1
R/W SHEET NO.	

HYDRAULICS ENGINEER

NORTH CAROLINA PROFESSIONAL SEAL 044158 ENGINEER BENJAMIN J. HENEGAR

DocuSigned by: Benjamin J. Henegar, 5/20/2026 8:48:40 PM EDT

4/7/2026

DOCUMENT NOT CONSIDERED FINAL UNLESS ALL SIGNATURES COMPLETED

TGS ENGINEERS
TGS ENGINEERS
706 HILLSBOROUGH ST. SUITE 200
RALEIGH, NC 27603
PH (919) 773-8887
CORP. LICENSE NO.: C-0275

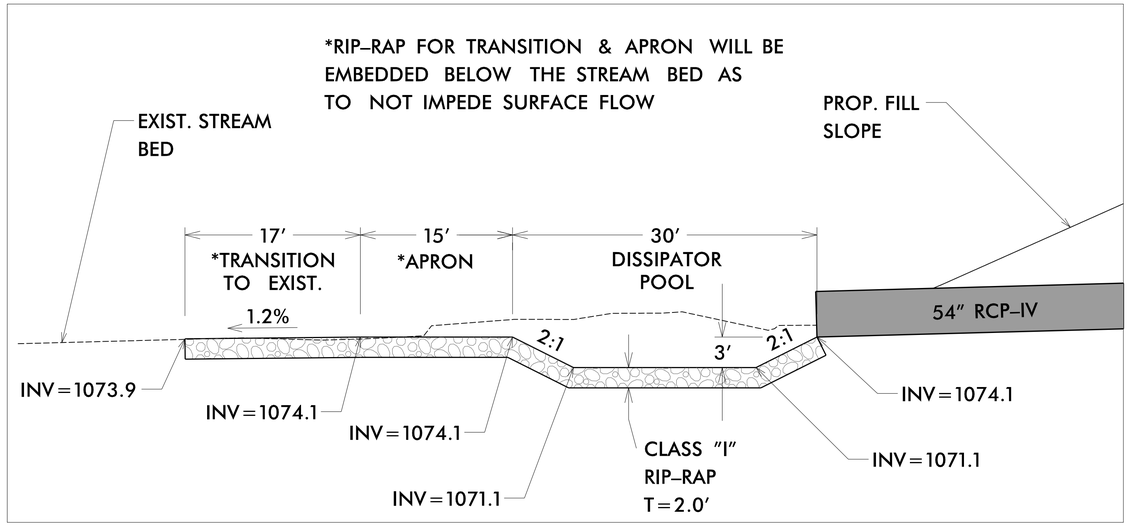

PROFILE VIEW

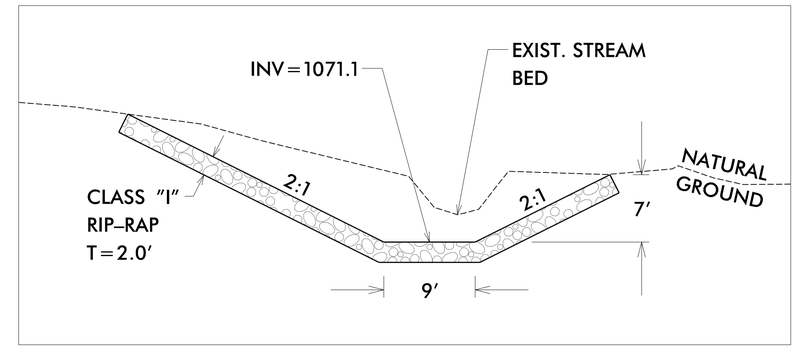

SECTION A–A

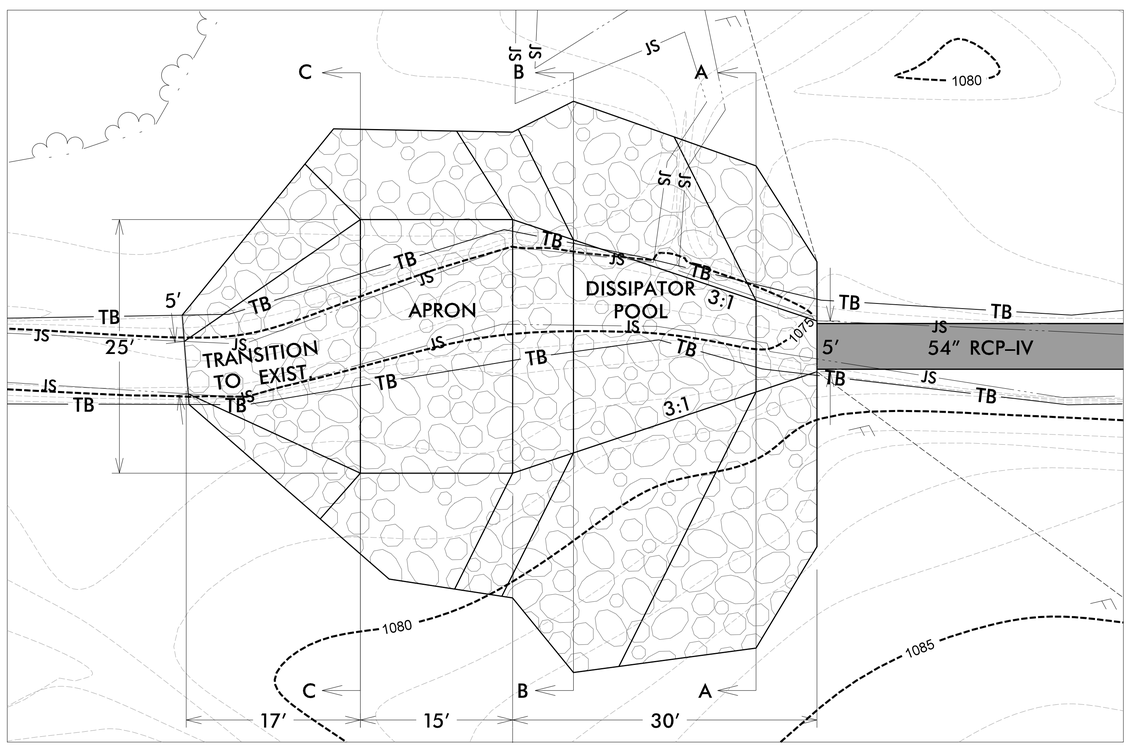

PLAN VIEW

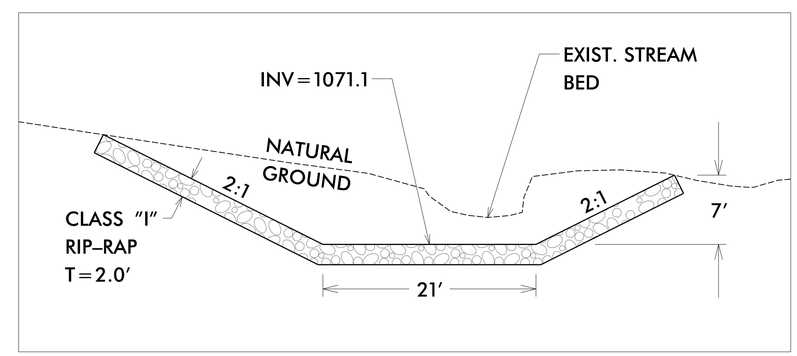

SECTION B–B

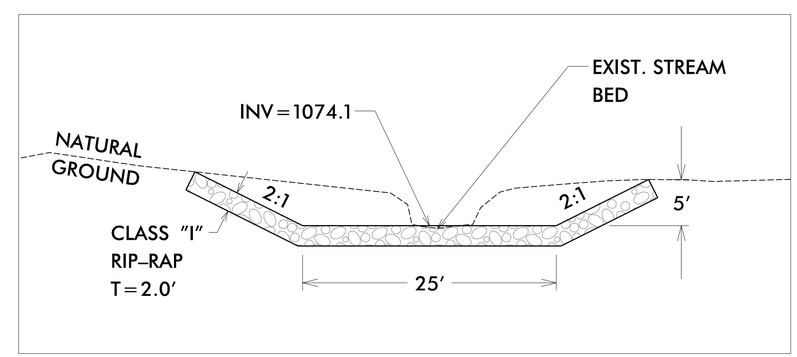

SECTION C–C

2/25/2026
X:\NCDOT\B-5833\Drainage\B-5833_hyd_Basin_1_PSH.dgn
benjhenegar

Docusign Envelope ID: 41D44578-A63F-46D2-B6D5-C24D648C528D

5/14/99

PROJECT REFERENCE NO.	SHEET NO.
B-5833	2D-2

GENERAL NOTES:

ALL CATCH BASINS OVER 3'-6" IN DEPTH TO BE PROVIDED WITH STEPS 12" ON CENTERS. STEPS SHALL BE IN ACCORDANCE WITH STD. 840.66.
ALL EXPOSED CORNERS TO BE CHAMFERED 1".
CLASS "B" CONCRETE TO BE USED THROUGHOUT.
2" PIPE WEEPHOLES TO BE PLACED AS DIRECTED BY ENGINEER.
THE 6" OPENING SHOWN MAY BE INCREASED TO 8" MAXIMUM IF DEEMED TO BE NECESSARY BY THE ENGINEER.
OPTIONAL CONSTRUCTION - MONOLITHIC POUR, 2" KEYWAY, OR #5 BAR DOWELS AT 12" CENTERS AS DIRECTED BY THE ENGINEER.
FORMS ARE TO BE USED FOR THE CONSTRUCTION OF THE BOTTOM SLAB.
IF REINFORCED CONCRETE PIPE IS SET IN BASE SLAB OF BOX, ADD TO BASE AS SHOWN ON STD. DWG. 840.00.
A STONE DRAIN CONSISTING OF 1 CUBIC FOOT OF NO. 78M STONE CONTAINED IN A BAG OF POROUS FABRIC SHALL BE PLACED AT EACH WEEP HOLE.
FOR 8' IN HEIGHT OR LESS USE 6" WALLS AND BOTTOM SLAB.
OVER 8' IN HEIGHT USE 8" WALLS AND BOTTOM SLAB. QUANTITIES TO BE ADJUSTED ACCORDINGLY.
DIMENSIONS MAY BE ADJUSTED AS DIRECTED BY THE ENGINEER.

| DIMS OF BOX & PIPE | | | | MIN. DIMENSIONS AND QUANTITIES FOR CONCRETE CATCH BASIN (BASED ON MIN. HEIGHT, H) | | | |

Docusign Envelope ID: 41D44578-A63F-46D2-B6D5-C24D648C528D

5/14/99

PROJECT REFERENCE NO.	SHEET NO.
B-5833	2D-3

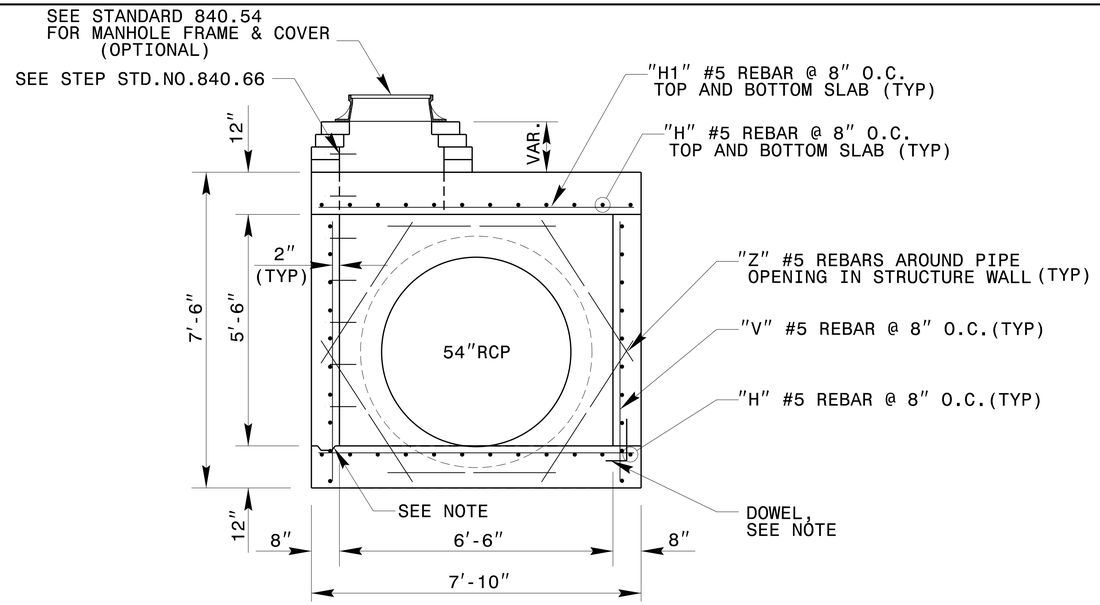

SECTION A-A

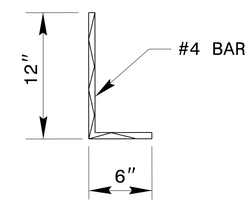

DOWEL

GENERAL NOTES:

USE CLASS "AA" CONCRETE THROUGHOUT.

PROVIDE ALL JUNCTION BOXES OVER 3'-6" IN DEPTH WITH STEPS 12" ON CENTER. USE STEPS WHICH COMPLY WITH STD. DRAWING 840.66.

OPTIONAL CONSTRUCTION - MONOLITHIC POUR, 2" KEYWAY, OR #4 BAR DOWELS AT 12" CENTERS AS DIRECTED BY THE ENGINEER.

USE FORMS FOR THE CONSTRUCTION OF THE BOTTOM SLAB.

INSTALL MANHOLE IN POSITION AS DIRECTED BY THE ENGINEER. CUT AND BEND ALL REBAR CROSSING THIS OPENING TO ALLOW 2" MINIMUM CONCRETE COVERAGE.

CHAMFER ALL EXPOSED CORNERS 1".

2" MINIMUM CONCRETE COVERAGE ON ALL REBAR.

IF REINFORCED CONCRETE PIPE IS SET IN BASE SLAB OR BOX, ADD TO BASE AS SHOWN IN STD. NO. 840.00.

MAKE ALL ADJUSTMENTS AS DIRECTED BY THE ENGINEER

BILL OF MATERIALS

BAR	NO.	SIZE	LENGTH	WEIGHT
H	44	#5	5'-0"	230
H1	25	#5	7'-6"	196
V	26	#5	6'-2"	168
Z	6	#5	4'-0"	25
TOTAL REINF. STEEL (LBS.)				619
TOTAL CONC. (CU. YDS.)				6.3

* 0.30 CU. YD. PER FOOT OF RISER HEIGHT
* 0.60 CU. YD. DEDUCTION FOR 1-54" RC PIPE

* NO DEDUCTION HAS BEEN MADE FOR PIPE OR CULVERT

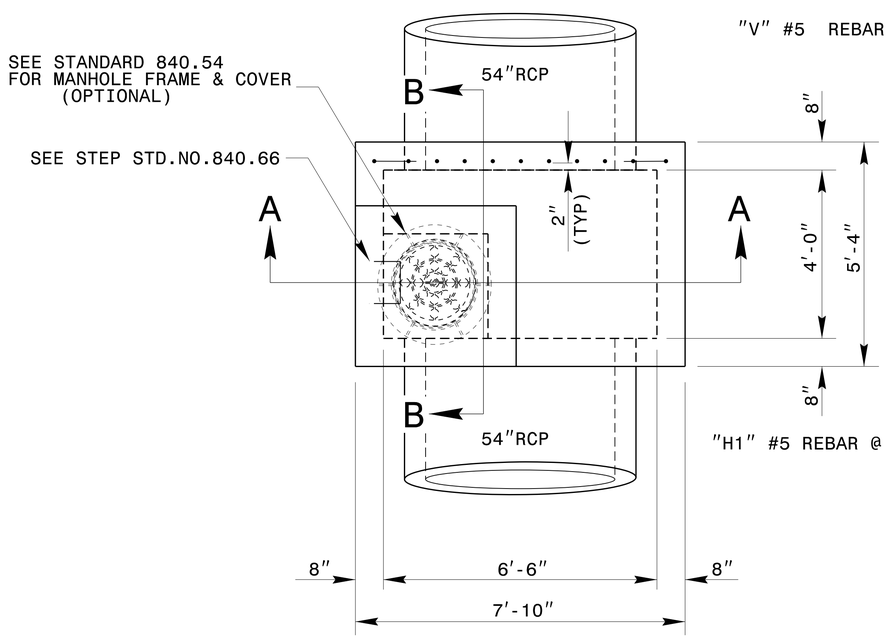

PLAN VIEW

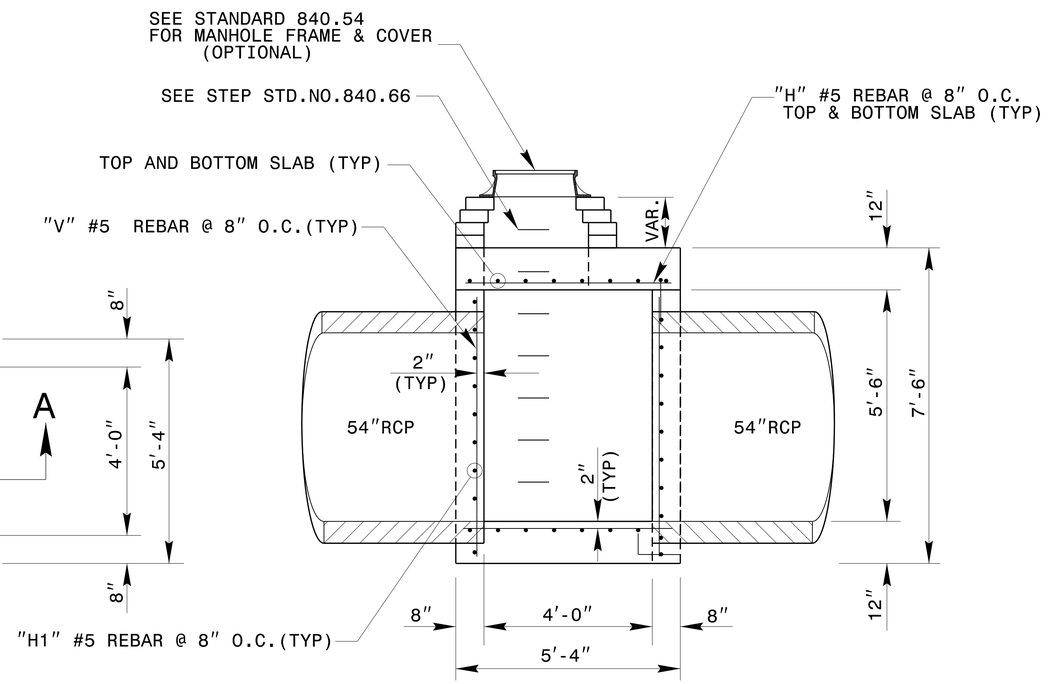

SECTION B-B

DOCUMENT NOT CONSIDERED FINAL UNLESS ALL SIGNATURES COMPLETED

CONTRACT STANDARDS & DEVELOPMENT UNIT
STANDARDS AND SPECIAL DESIGN
Office 919-707-6950 FAX 919-250-4119

TRAFFIC BEARING JUNCTION BOX FOR PROPOSED 54"RCP

ORIGINAL BY: DATE:
MODIFIED BY: nbritt DATE: 12/22/09
CHECKED BY: DATE:
FILE SPEC.: detail/nbritt/english/rural/r2233aa 4x4culv54tbjb.dgn

$$$$$$$SYSTIME$$$$$
$$$$$$$$$$$$$$$$$$$$$$$$$$$$$$$$$$$$$

Docusign Envelope ID: 41D44578-A63F-46D2-B6D5-C24D648C528D

PROJECT REFERENCE NO.	SHEET NO.
B-5833	2D-4

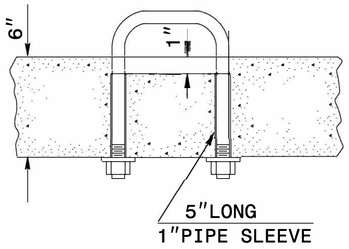

PARTIAL SECTION

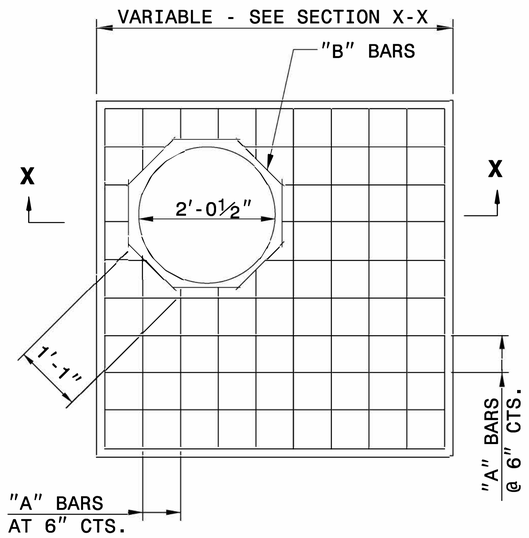

PLAN

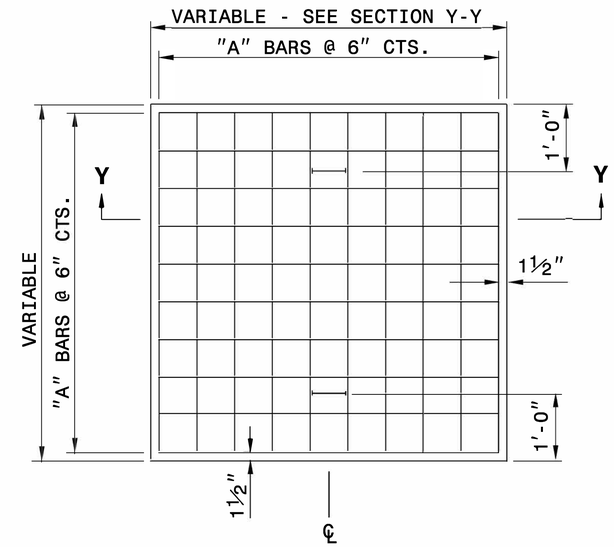

PLAN

GENERAL NOTES:

CONSTRUCT IN ACCORDANCE WITH SECTION 859 OF THE STANDARD SPECIFICATIONS.

THE DIMENSIONS FOR THE EXISTING BOXES ARE APPROXIMATE AND MAY VARY SLIGHTLY.

DETAIL INTENDED FOR NON-TRAFFIC BEARING DRAINAGE STRUCTURES.

BILL OF MATERIALS

REINFORCING STEEL				
CODE	SIZE	QTY.	LENGTH	REINF. STEEL LBS.
A	#4	20	4'-6"	60.12
B	#4	8	1'-1"	5.79
TOTAL				65.91 *
MASONRY				CU YDS
TOP SLAB CONCRETE CLASS "B"				.4326 *
BRICK MASONRY PER FT HT (MIN)				.4111

★ NOTE:
QUANTITIES BASED ON 3'-6" X 3'-6" DRAINAGE STRUCTURE. ADJUST QUANTITIES FOR LARGER STRUCTURES AND MANHOLE CONSTRUCTION.

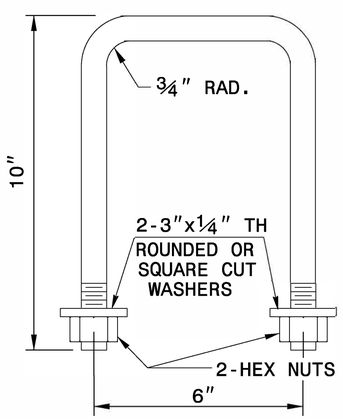

DETAIL OF HANDLE

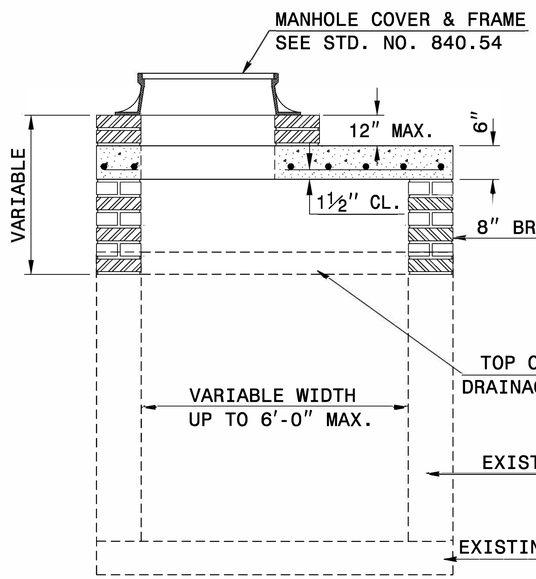

SECTION X-X

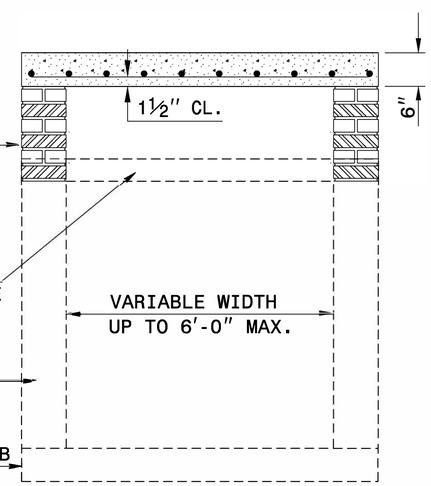

SECTION Y-Y

NORTH CAROLINA PROFESSIONAL SEAL 33144 ENGINEER
3/5/2026

DOCUMENT NOT CONSIDERED FINAL UNLESS ALL SIGNATURES COMPLETED

CONTRACT STANDARDS AND DEVELOPMENT UNIT
Office 919-707-6950 FAX 919-250-4119

DETAIL TO CONVERT EXISTING DI, CB, OTCB or GI TO JUNCTION BOX (MANHOLE OPTIONAL)

ORIGINAL BY: T.S.S. DATE: NOV.1997
MODIFIED BY: T.S.S. DATE: FEB.2000
CHECKED BY: DATE:
FILE SPEC.: ds174:/usr/details/stand/boxtojbe.dgn

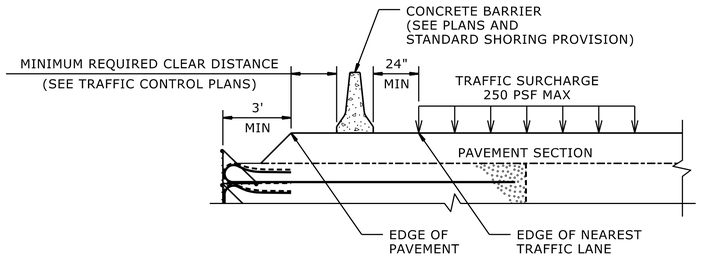

SURCHARGE CASE

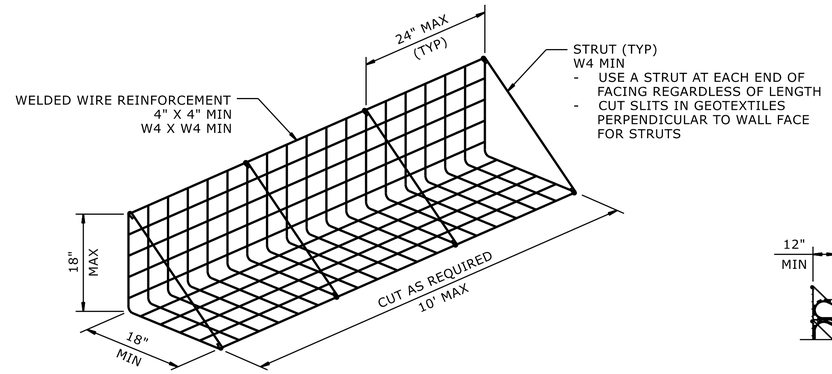

FACING DETAIL

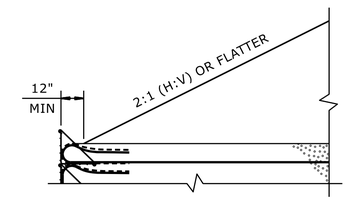

SLOPE CASE

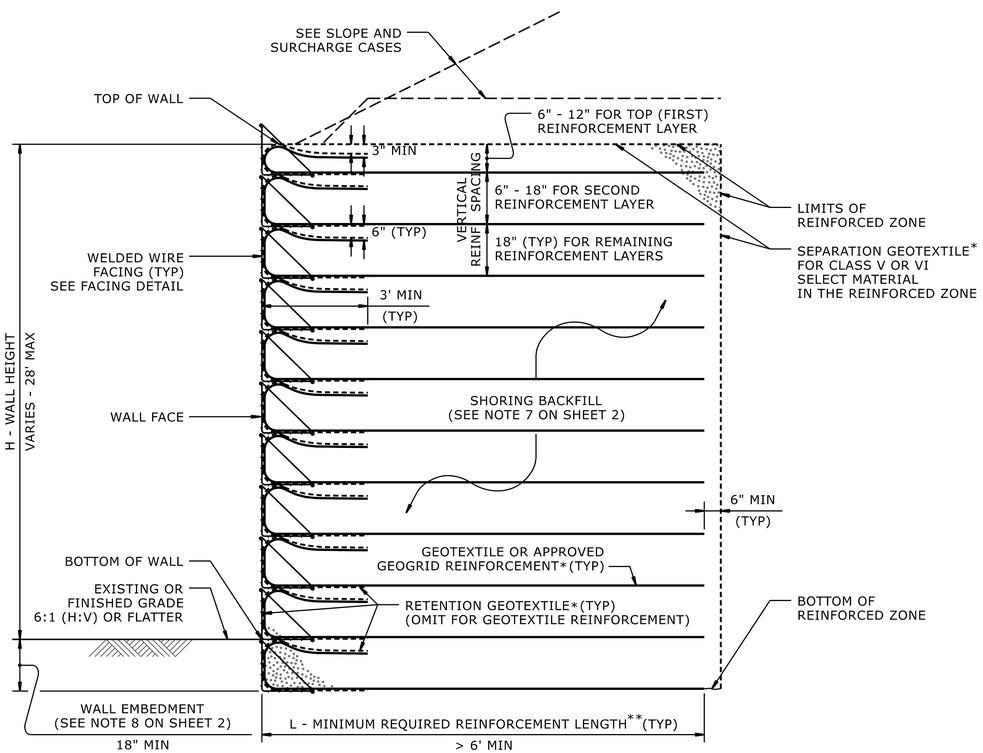

STANDARD TEMPORARY WALL

(FOR STANDARD TEMPORARY WALLS ON STRUCTURES,
SEE TEMPORARY WALL ON STRUCTURE DETAIL ON SHEET 2.)
*SEE GEOSYNTHETIC PLACEMENT DETAILS ON SHEET 2.
**SEE REINFORCEMENT TABLES ON SHEET 3.

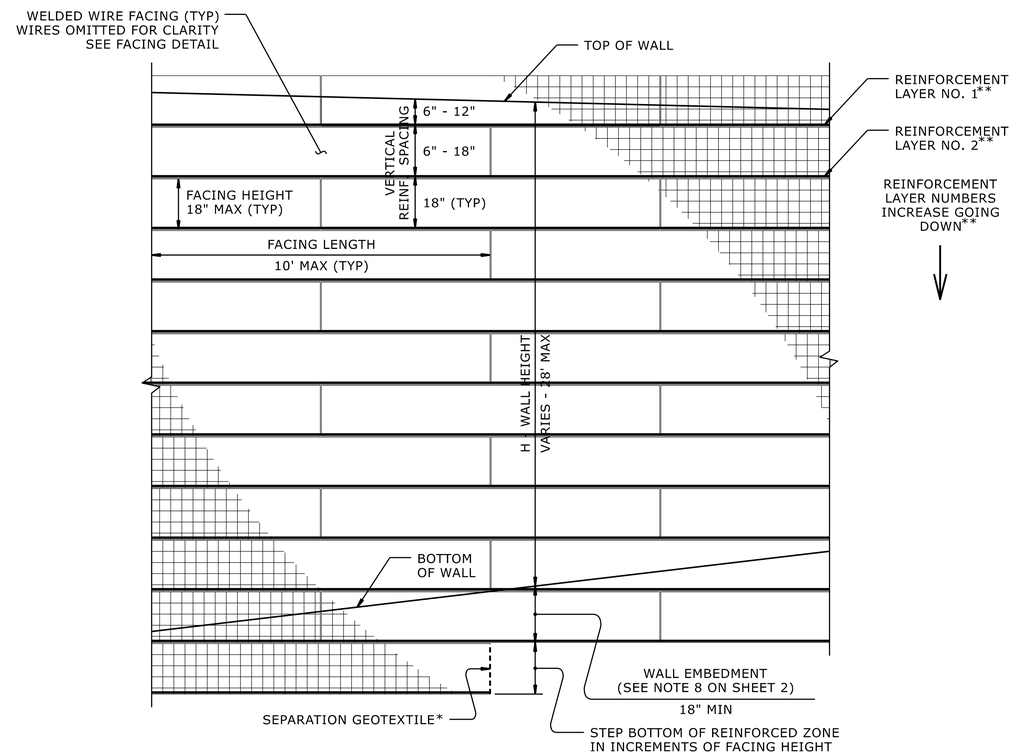

STANDARD TEMPORARY WALL - PARTIAL ELEVATION

*SEE GEOSYNTHETIC PLACEMENT DETAILS ON SHEET 2.
**SEE REINFORCEMENT TABLES ON SHEET 3.

B-5833

2G-1 | -

NORTH CAROLINA
DEPARTMENT
OF TRANSPORTATION

GEOTECHNICAL
ENGINEERING UNIT

GEOTECHNICAL
ENGINEER

DocuSigned by:
Scott A. Hidden 02/02/2026
F2D0A9F8...

NORTH CAROLINA
PROFESSIONAL
SEAL
022246
ENGINEER
SCOTT A. HIDDEN

DOCUMENT NOT CONSIDERED FINAL
UNLESS ALL SIGNATURES COMPLETED

STANDARD
DETAIL NO. 1801.02

GEOTECHNICAL STANDARD DETAIL FOR

TEMPORARY WALL (SHEET 1 OF 3)

DATE: 02-18-2025

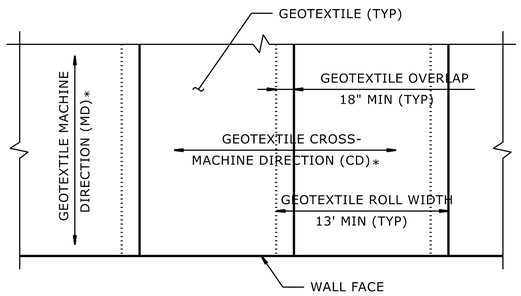

GEOTEXTILE PLACEMENT

(100% COVERAGE MIN FOR GEOTEXTILE REINFORCEMENT)

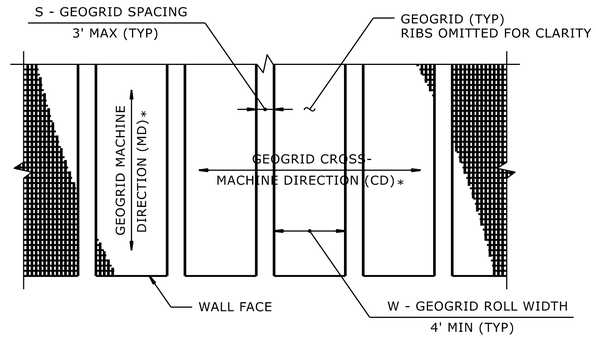

GEOGRID PLACEMENT

(80% COVERAGE MIN FOR GEOGRID REINFORCEMENT - $\frac{W}{W+S} \times 100 \geq 80\%$, SEE NOTE 11)

GEOSYNTHETIC PLACEMENT DETAILS

(PLAN VIEW)
*SEE NOTE 12.

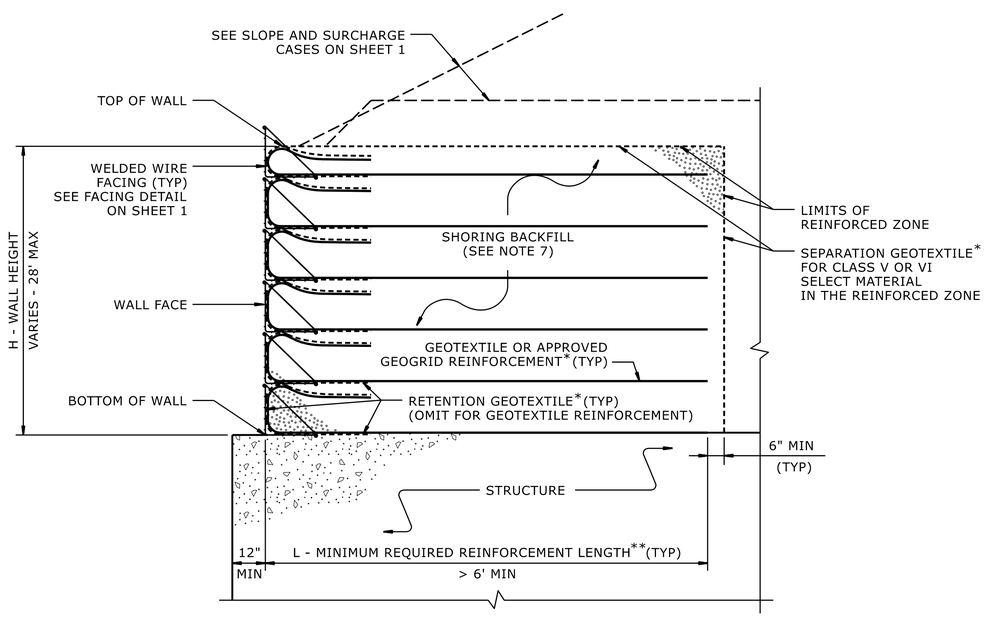

TEMPORARY WALL ON STRUCTURE DETAIL

*SEE GEOSYNTHETIC PLACEMENT DETAILS.
**SEE REINFORCEMENT TABLES ON SHEET 3.

NOTES:

1. AT THE CONTRACTOR'S OPTION, USE STANDARD TEMPORARY WALLS AS NOTED IN THE PLANS.
2. FOR STANDARD TEMPORARY WALLS, SEE STANDARD SHORING PROVISION.
3. STANDARD TEMPORARY WALLS ARE BASED ON THE FOLLOWING IN-SITU ASSUMED SOIL PARAMETERS:
   UNIT WEIGHT, γ = 120 PCF
   FRICTION ANGLE, φ = 30 DEGREES
   COHESION, c = 0 PSF
4. DO NOT USE STANDARD TEMPORARY WALLS IF ASSUMED SOIL PARAMETERS ARE NOT APPLICABLE.
5. DO NOT USE STANDARD TEMPORARY WALLS WHEN VERY LOOSE OR SOFT SOIL OR MUCK IS BELOW TEMPORARY WALLS.
6. USE GROUNDWATER ELEVATION NOTED IN THE PLANS. IF NO GROUNDWATER ELEVATION IS SHOWN IN THE PLANS, ASSUME GROUNDWATER DEPTH IS LESS THAN 7' BELOW BOTTOM OF REINFORCED ZONE. DO NOT USE STANDARD TEMPORARY WALLS IF GROUNDWATER OR FLOOD ELEVATION IS ABOVE BOTTOM OF REINFORCED ZONE.
7. DO NOT USE A-2-4 SOIL FOR STANDARD TEMPORARY WALLS AROUND CULVERTS OR IN THE REINFORCED ZONE OF STANDARD TEMPORARY WALLS FOR SLOPE CASES. DO NOT USE CLASS VI SELECT MATERIAL IN THE REINFORCED ZONE OF STANDARD TEMPORARY WALLS WITH GEOTEXTILE REINFORCEMENT.
8. WALL EMBEDMENT IS NOT REQUIRED FOR STANDARD TEMPORARY WALLS ON STRUCTURES OR ROCK AS DETERMINED BY THE ENGINEER.
9. DO NOT USE MORE THAN 4 DIFFERENT REINFORCEMENT STRENGTHS FOR EACH STANDARD TEMPORARY WALL.
10. GEOGRIDS FOR GEOGRID REINFORCEMENT ARE APPROVED FOR SHORT TERM DESIGN STRENGTHS (3-YEAR DESIGN LIFE) IN THE MD AND CD BASED ON MATERIAL TYPE. THE LIST OF APPROVED GEOGRIDS WITH DESIGN STRENGTHS IS AVAILABLE FROM: connect.ncdot.gov/resources/Geological/Pages/Products.aspx
    DEFINE MATERIAL TYPE FROM THE WEBSITE ABOVE FOR SHORING BACKFILL AS FOLLOWS:

MATERIAL TYPE	SHORING BACKFILL
BORROW	A-2-4 SOIL
FINE AGGREGATE	CLASS II, TYPE 1 OR CLASS III SELECT MATERIAL
COARSE AGGREGATE	CLASS V OR VI SELECT MATERIAL

11. FOR GEOGRID REINFORCEMENT WITH LESS THAN 100% COVERAGE, STAGGER REINFORCEMENT SO GEOGRIDS ARE CENTERED OVER GAPS IN THE REINFORCEMENT LAYER BELOW.
12. AT THE CONTRACTOR'S OPTION, REINFORCEMENT MAY BE INSTALLED WITH THE MD PARALLEL TO THE WALL FACE IF BOTH OF THE FOLLOWING CONDITIONS OCCUR:
    - W (REINFORCEMENT ROLL WIDTH) > (MINIMUM REQUIRED REINFORCEMENT LENGTH) + 4.5' AND
    - REINFORCEMENT STRENGTH IN CD > MINIMUM REQUIRED REINFORCEMENT STRENGTH IN MD.
13. SUBMIT A "STANDARD TEMPORARY WALL SELECTION FORM" AT LEAST 7 DAYS BEFORE STARTING TEMPORARY WALL CONSTRUCTION. STANDARD SHORING SELECTION FORMS ARE AVAILABLE FROM: connect.ncdot.gov/resources/Geological/Pages/Geotech_Forms_Details.aspx
14. DO NOT PLACE SHORING BACKFILL OR REINFORCEMENT UNTIL EXCAVATION DIMENSIONS AND FOUNDATION MATERIAL ARE APPROVED.
15. FOR STANDARD TEMPORARY WALLS WITH PILE FOUNDATIONS IN THE REINFORCED ZONE, DRIVE PILES THROUGH REINFORCEMENT AFTER CONSTRUCTING TEMPORARY WALLS.
16. DO NOT SPLICE OR OVERLAP REINFORCEMENT SO SEAMS ARE PARALLEL TO THE WALL FACE.
17. CONTACT THE ENGINEER WHEN EXISTING OR FUTURE OBSTRUCTIONS SUCH AS FOUNDATIONS, PAVEMENTS, PIPES, INLETS OR UTILITIES WILL INTERFERE WITH REINFORCEMENT.
18. FOR STANDARD TEMPORARY WALLS WITH INTERIOR ANGLES LESS THAN 90 DEGREES, WRAP GEOSYNTHETICS AT ACUTE CORNERS AS DIRECTED BY THE ENGINEER.
19. FOR STANDARD TEMPORARY WALLS WITH TOP OF WALL WITHIN 5' OF FINISHED GRADE, REMOVE TOP FACING AND INCORPORATE TOP REINFORCEMENT LAYER INTO FILL WHEN PLACING FILL IN FRONT OF WALL.

NORTH CAROLINA DEPARTMENT OF TRANSPORTATION

GEOTECHNICAL ENGINEERING UNIT

GEOTECHNICAL ENGINEER

DocuSigned by: Scott A. Hidden 10/2/2026

NORTH CAROLINA PROFESSIONAL SEAL 022246 ENGINEER SCOTT A. HIDDEN

DOCUMENT NOT CONSIDERED FINAL UNLESS ALL SIGNATURES COMPLETED

STANDARD DETAIL NO. 1801.02

GEOTECHNICAL STANDARD DETAIL FOR

TEMPORARY WALL (SHEET 2 OF 3)

DATE: 02-18-2025

5/26/20

SLOPE OR SURCHARGE CASE	GROUNDWATER DEPTH BELOW BOTTOM OF REINFORCED ZONE (SEE NOTE 6 ON SHEET 2) (FT)	SHORING BACKFILL TYPE IN THE REINFORCED ZONE (SEE NOTE 7 ON SHEET 2)	H - WALL HEIGHT (FT)																								
			< 4	5	6	7	8	9	10	11	12	13	14	15	16	17	18	19	20	21	22	23	24	25	26	27	28
SLOPE CASE	> 0	CLASS II, TYPE 1, CLASS III, CLASS V OR CLASS VI SELECT MATERIAL	6	6	7	8	9	11	12	13	13	14	15	16	17	18	19	20	21	22	23	24	24	25	26	27	27
SURCHARGE CASE	> 0 TO 7 FOR H < 20' > 0 TO 10 FOR H > 20'	ALL SHORING BACKFILL TYPES	6	7	7	8	8	9	9	10	11	11	12	12	13	14	14	15	16	17	17	18	19	19	20	21	22
	> 7 FOR H < 20' > 10 FOR H > 20'	A-2-4 SOIL	6	6	7	8	8	9	9	10	11	11	12	12	13	14	14	15	16	16	17	18	18	19	20	20	21
		CLASS II, TYPE 1 OR CLASS III SELECT MATERIAL	6	6	7	7	8	8	9	10	10	11	11	12	12	13	14	15	15	16	16	17	17	18	18	19	20
		CLASS V OR CLASS VI SELECT MATERIAL	6	6	7	7	7	8	8	9	9	10	10	11	12	13	13	14	14	15	15	16	17	17	18	19	19

L - MINIMUM REQUIRED REINFORCEMENT LENGTH (FT)

(FOR ALL REINFORCEMENT TYPES)

WALL HEIGHT (H) + WALL EMBEDMENT (FT)	NUMBER OF REINFORCEMENT LAYERS*
2.5 - 4	3
4 - 5.5	4
5.5 - 7	5
7 - 8.5	6
8.5 - 10	7
10 - 11.5	8
11.5 - 13	9
13 - 14.5	10
14.5 - 16	11
16 - 17.5	12
17.5 - 19	13
19 - 20.5	14
20.5 - 22	15
22 - 23.5	16
23.5 - 25	17
25 - 26.5	18
26.5 - 28	19
28 - 29.5	20

*BASED ON VERTICAL REINFORCEMENT SPACING SHOWN ON SHEET 1.

REINFORCEMENT LAYER NUMBER *	SHORING BACKFILL TYPE IN THE REINFORCED ZONE (SEE NOTE 7 ON SHEET 2)				
	SLOPE CASE		SURCHARGE CASE		
	CLASS II, TYPE 1 OR CLASS III SELECT MATERIAL	CLASS V SELECT MATERIAL	A-2-4 SOIL	CLASS II, TYPE 1 OR CLASS III SELECT MATERIAL	CLASS V SELECT MATERIAL
1	2400	2400	2400	2400	2400
2	2400	2400	2400	2400	2400
3	2400	2400	2400	2400	2400
4	2400	2400	2500	2400	2400
5	2500	2400	3000	2400	2400
6	3000	2400	3500	2800	2400
7	3500	2700	4000	3200	2600
8	4000	3100	4500	3600	2900
9	4500	3500	5000	4000	3200
10	5000	3900	5500	4400	3500
11	5500	4300	6000	4800	3800
12	6000	4700	6500	5200	4100
13	6500	5100	7000	5600	4400
14	7000	5400	7500	6000	4700
15	7500	5800	8000	6400	5000
16	8000	6200	8500	6800	5300
17	8500	6600	9000	7200	5600
18	9000	7000	9500	7600	5900
19	9500	7400	10000	8000	6200
20	10000	7800	10500	8400	6500

GEOTEXTILE REINFORCEMENT ULTIMATE TENSILE STRENGTH (LB/FT)

REINFORCEMENT LAYER NUMBER*	SHORING BACKFILL TYPE IN THE REINFORCED ZONE (SEE NOTE 7 ON SHEET 2)				
	SLOPE CASE		SURCHARGE CASE		
	CLASS II, TYPE 1 OR CLASS III SELECT MATERIAL	CLASS V OR CLASS VI SELECT MATERIAL	A-2-4 SOIL	CLASS II, TYPE 1 OR CLASS III SELECT MATERIAL	CLASS V OR CLASS VI SELECT MATERIAL
1	240	200	340	290	240
2	380	310	520	430	350
3	530	420	700	570	460
4	690	550	870	720	570
5	860	690	1050	860	680
6	1030	830	1220	1000	790
7	1200	970	1400	1150	900
8	1370	1110	1580	1290	1010
9	1550	1240	1750	1430	1120
10	1720	1380	1930	1580	1230
11	1890	1520	2100	1720	1340
12	2060	1660	2280	1860	1450
13	2240	1800	2450	2010	1560
14	2410	1940	2630	2150	1670
15	2580	2080	2800	2290	1780
16	2750	2220	2980	2440	1890
17	2930	2360	3160	2580	2000
18	3100	2500	3330	2720	2110
19	3270	2640	3510	2860	2220
20	3440	2780	3690	3000	2330

GEOGRID REINFORCEMENT SHORT-TERM DESIGN STRENGTH (LB/FT)

(SEE NOTE 10 ON SHEET 2.)

MINIMUM REQUIRED REINFORCEMENT STRENGTH IN MD

(SEE NOTE 9 ON SHEET 2.)
*SEE PARTIAL ELEVATION ON SHEET 1
FOR REINFORCEMENT LAYER NUMBERING.

B-5833

2G-3 | -

NORTH CAROLINA DEPARTMENT OF TRANSPORTATION

GEOTECHNICAL ENGINEERING UNIT

GEOTECHNICAL ENGINEER

DocuSigned by: Scott A. Hidden 02/02/2026

NORTH CAROLINA PROFESSIONAL SEAL 022246 ENGINEER SCOTT A. HIDDEN

DOCUMENT NOT CONSIDERED FINAL UNLESS ALL SIGNATURES COMPLETED

STANDARD DETAIL NO. 1801.02

GEOTECHNICAL STANDARD DETAIL FOR TEMPORARY WALL (SHEET 3 OF 3)

DATE: 02-18-2025

COMPUTED BY: VML DATE: 03 MARCH 2026
CHECKED BY: DBE DATE: 03 MARCH 2026

PROJECT REFERENCE NO.	SHEET NO.
B-5833	3B-1

STATE OF NORTH CAROLINA
DIVISION OF HIGHWAYS

SUMMARY OF EARTHWORK

IN CUBIC YARDS

LOCATION	UNCLASSIFIED EXCAVATION	UNDERCUT	EMBT+%	BORROW	WASTE
PHASE 1					
-L- STA 20+00.00 TO -L- 26+51.48 BRIDGE	1026		9773	8747	
BRIDGE -L- STA 29+01.48 TO -L- 35+00.00	1226		10473	9247	
-LDET- STA 10+00.00 TO 14+96.35 (CONSTRUCTION)	142		837	695	
-DRW1- STA 10+50.00 TO -DRW1- 15+26.56	8		5735	5727	
-RAMPD- STA 12+00.00 TO -RAMPD- 16+00.00	12		23095	23083	
-LOOPD- STA 12+50.00 TO -LOOPD- 14+00.00	2188		3151	963	
-LDET- STA 10+00.00 TO 14+96.35 (REMOVAL)	728		163		565
SUBTOTAL	5330		53228	48462	564
PHASE 2					
-L- STA 10+50.00 TO -L- 20+00.00	834		2976	2142	
-L- STA 35+00.00 TO -L- 41+50.00	331		621	290	
-Y1- STA 11+00.00 TO -Y1- 11+94.74	90		5		85
-Y2- STA 10+12.00 TO -Y2- 11+60.00	1		362	361	
-Y4- STA 12+30.00 TO -Y4- 13+61.91	9		55	46	
-RAMPD- STA 10+15.19 TO -RAMPD- 12+00.00			5343	5343	
-RAMPD- STA 16+00.00 TO -RAMPD- 18+00.00	289		849	560	
-LOOPD- STA 10+15.27 TO -LOOPD- 12+50.00	922		1357	435	
-LOOPD- STA 14+00.00 TO -LOOPD- 17+50.00	1666		944		722
SUBTOTAL	4142		12512	9177	807
PHASE 3					
-Y3- STA 11+93.37 RT. TO -Y3- 16+75.99 RT.	412		40		372
-Y3- STA 13+86.88 LT. TO -Y3- 18+95.12 LT.	362		5		357
-LOOPA- STA 10+14.76 TO -LOOPA- 14+50.00	155		1214	1059	
-RAMPA- STA 10+14.77 TO -RAMPA- 15+50.00	1210		1321	111	
SUBTOTAL	2139		2581	1171	729
TOTAL	11611		68320	58810	2100
MATERIAL FOR SHOULDER CONSTRUCTION			1423	1423	
LOSS DUE TO CLEARING & GRUBBING	-400			400	
WASTE IN LIEU OF BORROW				-2100	-2100
PROJECT TOTAL	11211		69743	58532	
EST. 5% TO REPLACE TOP SOIL ON BORROW PIT				2927	
GRAND TOTAL	11211		69743	61458	
SAY	11780			64540	

PER GEOTECHNICAL RECOMMENDATIONS DATED MARCH 13, 2019:
ESTIMATED UNDERCUT = 1000 CY (CONTINGENCY, AS DIRECTED BY THE ENGINEER)
SELECT GRANULAR MATERIAL = 1350 CY (CONTINGENCY, AS DIRECTED BY THE ENGINEER)
GEOTEXTILE FOR SOIL STABILIZATION = 1350 SY (CONTINGENCY, AS DIRECTED BY THE ENGINEER)

DDE = 1470 CY

Earthwork quantities are calculated using Roadway Design Unit Guidelines. These earthwork quantities are based in part on subsurface data provided by the Geotechnical Engineering Unit.

Approximate quantities only. Clearing and Grubbing, Unclassified Excavation, Fine Grading, and Removal of Existing Pavement, will be paid for at the contract lump sum price for "Grading".

REMOVAL OF EXISTING CONCRETE PAVEMENT SUMMARY

IN SQUARE YARDS

SURVEY LINE	STATION	STATION	LOCATION LT/RT/CL	SY
-RAMPD-	10+45	22+39	CL	2099
-LOOPD-	10+80	19+51	CL	1527
-LOOPA-	10+36	14+81	CL	942
-RAMPA-	10+26	16+80	CL	1318
			TOTAL:	5886
			SAY:	5890

REMOVAL OF EXISTING ASPHALT PAVEMENT SUMMARY

IN SQUARE YARDS

SURVEY LINE	STATION	STATION	LOCATION LT/RT/CL	SY
-L-	17+56	18+29	RT	12.6
-L-	18+93	26+60	RT	2046.9
-L-	30+22	35+58	RT	1791.8
-L-	36+48	41+00	LT	180.3
-L-	36+76	38+67	RT	71.7
-L-	38+67	41+00	RT	68.9
-Y1-	11+51	12+06	LT/RT	124.6
-Y2-	10+23	10+67	LT	42.2
-RAMPD-	10+44	22+39	RT	568.6
-RAMPD-	10+95	22+39	LT	481.2
-LOOPD-	10+90	19+51	RT	328.7
-LOOPD-	11+04	19+51	LT	397.7
-Y3-	11+93	16+76	RT	166.3
-Y3-	13+86	18+95	LT	188.6
-LOOPA-	10+35	14+81	LT	220.7
-LOOPA-	10+53	14+81	RT	211.2
-RAMPA-	10+26	16+81	LT	293.4
-RAMPA-	10+33	16+81	RT	293.0
-Y4-	13+44	13+64	LT	4.4
-LDET-	10+25	14+70	LT	912.7
			TOTAL:	8405.5
			SAY:	8410

SUMMARY OF WOVEN WIRE FENCE, 47" FABRIC

IN LINEAR FEET AND EACH

STATION TO STATION	LT. or RT.	FABRIC LF	LINE POSTS EA	TERMINAL POSTS EA
-L- 22+00.00 to -DRW1- 13+63.21	LT/RT	207	11	7
-RAMPD- 10+78.86 TO -RAMPD- 16+34.22	RT	649	41	10
-L- 29+23.06 TO -L- 33+00.00	LT	380	23	7
-L- 33+60.00 TO -Y4- 13+00.00	LT/RT	220	12	7
NOTE: LT. OR RT. INDICATES LEFT OR	TOTAL	1456	87	31
RIGHT OF THE MAIN LINE.	SAY	1460	88	31

SHOULDER BERM GUTTER SUMMARY

IN LINEAR FEET

SURVEY LINE	STATION	STATION	LOCATION	LENGTH (LF)
-L-	25+03.74	26+63.21	RT	159.5
-Y3-	11+93.13	13+40.69	RT	147.6
-Y3-	17+29.49	18+52.25	LT	122.8
			TOTAL:	429.9
			SAY:	430

SUMMARY OF CABLE GUIDERAIL

IN LINEAR FEET AND EACH

LINE	BEGIN STATION	END STATION	LOC.	SINGLE FACED LENGTH (LF)	DOUBLE FACED LENGTH (LF)	INTERMEDIATE ANCHORS (EA)	TERMINAL ANCHORS (EA)	REMOVE EX. GUIDERAIL (LF)
-Y3-	CONTINGENCY	QUANTITIES	MED.		200		2	200
			TOTAL:		200		2	200
			SAY:		200		2	200
ADDITIONAL GUIDERAIL POSTS			SAY 10 EA (CONTINGENCY)					

"N" = DISTANCE FROM EDGE OF LANE TO FACE OF GUARDRAIL.
TOTAL SHOULDER WIDTH = DISTANCE FROM EDGE OF TRAVEL LANE TO SHOULDER BREAK POINT.
FLARE LENGTH = DISTANCE FROM LAST SECTION OF PARALLEL GUARDRAIL TO END OF GUARDRAIL.
W = TOTAL WIDTH OF FLARE FROM BEGINNING OF TAPER TO END OF GUARDRAIL.
G = GATING IMPACT ATTENUATOR TYPE 350
NG = NON-GATING IMPACT ATTENUATOR TYPE 350

GUARDRAIL SUMMARY

SURVEY LINE	BEG. STA.	END STA.	LOCATION	LENGTH STRAIGHT	LENGTH SHOP CURVED	LENGTH DOUBLE FACED	WARRANT POINT APPROACH END	WARRANT POINT TRAILING END	"N" DIST. FROM E.O.L.	TOTAL SHOUL. WIDTH	FLARE LENGTH APPROACH END	FLARE LENGTH TRAILING END	W APPROACH END	W TRAILING END	ANCHORS TYPE GREU, TL-3	CAT-1	AT-1	TYPE III	B-77	TYPE GREU, TL-2	25' CLEAR SPAN			IMPACT ATTENUATOR TYPE TL-3 EA	G	NG	SINGLE FACED GUARDRAIL	REMOVE EXISTING GUARDRAIL	REMOVE AND STOCKPILE EXISTING GUARDRAIL	REMARKS
-L-	11+53.39	13+48.38	LT	181.25'	37.50'		13+48.38	12+15.75	8'	11'	6.25	50'	4'	1'	1		1				1									RAD=20'
-L-	11+10.19	12+22.62	RT	112.50'			13+35.50	13+64.60	8'	11'	50'	50'	1'	1'	2															
-L-	12+59.24	14+09.24	RT	150.00'			13+35.50	13+64.60	8'	11'	50'	50'	1'	1'	2						1									
-L- /-DRW1-	-L- 21+30.50	-DRW1- 13+58.42	LT /RT	300.00'	37.50'		-DRW1- 14+50.00	-L- 21+30.50	VAR 6'-8'	VAR 9'-11'	25'	50'	0.5'	1'	1					1										RAD=22'
-L- /-RAMPD-	-L- 22+50.10	-RAMPD- 17+51.25	RT	768.75'	62.50'		-RAMPD- 11+00.00	-RAMPD- 18+00.00	VAR 10'-12'	VAR 13'-15'	50'		1'		1	1												750.73'		RAD=50'/REMOVE -L- 22+21 TO -RAMPD- 17+28
-LOOPD-	15+80.18	17+60.78	RT	193.75			17+60.78	15+80.18	VAR 4'-11'	VAR 7'-14'						1												927.42'		REMOVE DOUBLE G/R FROM 11+90 TO 17+61
-DRW1- /-L-	-DRW1- 12+21.70	-L- 26+26.36	LT	510.375'	25.00'		-L- 26+26.36	-DRW1- 12+21.70	VAR 6'-8'	VAR 9'-11'		25'		0.5'					1	1								295.59'		RAD=22'/REMOVE -L- 23+21 TO EXIST. BRIDGE
-LOOPD- /-L-	-LOOPD- 11+21.37	-L- 26+76.60	LT /RT	179.125'	112.50'		-LOOPD- 11+21.37	-L- 26+76.60	VAR 5'-14'	VAR 8'-17'	6.25		4'				1		1									97.46'		RAD=60'/REMOVE -L- 25+61 TO EXIST. BRIDGE
-L-	28+76.36	35+08.77	LT	635.375'			34+00.00	28+76.36	8'	11'	50'		1'		1				1									228.79'		REMOVE FROM EXIST. BRIDGE TO -L- 32+46
-L-	29+26.60	30+24.47	RT	97.875'			29+26.60	30+24.47	8'	11'		50'		1'	1				1									219.31'		REMOVE FROM EXIST. BRIDGE TO -L- 32+87
-Y3-	11+93.13	13+40.69	RT	147.875'			11+93.13	13+40.69	VAR.	VAR.									1									312.12'		REMOVE FROM -Y3- 11+93 TO 14+99
-Y3-	17+29.49	19+02.25	LT	172.875'			19+02.25	17+29.49	VAR.	VAR.	50'		1'		1				1									151.06'		REMOVE FROM -Y3- 17+36 TO 18+87
-Y3-	14+34.72	15+03.59	MED	95.75'			15+03.59												2					1		X		212.00'		REMOVE FROM -Y3- 15+05 TO 17+17
-Y3-	15+73.59	16+42.47	MED	95.75'			15+73.59												2					1		X		210.71'		REMOVE FROM -Y3- 15+18 TO 17+29
		SUBTOTAL (LF)		3641.25'										TOTAL ANCHORS OR ATTENUATORS (EA)	10	2	2		10	2	2			2		X		3405.19'		
		LESS ANCHORS (LF)		903.75'										ANCHOR UNIT LENGTH (LF)	50'	6.25'	6.25'	18.75'	22.875'	25'	50'								
		TOTAL GUARDRAIL (LF)		2737.50'										DEDUCTION PER TYPE (LF)	500'	12.5'	12.5'		228.75'	50'	100'							3410'		
		SAY GUARDRAIL (LF)		2737.50'	275.00'		ADDITIONAL GUARDRAIL POSTS: SAY 10 EA							TOTAL DEDUCTION (LF)	903.75'														

12/06/07

3/3/2026
R:\Roadway\Proj\b5833_rdy_psh_3b-1.dgn
(Jessica Lowery)

TGSLTW1014

COMPUTED BY:	BJH	DATE:	09-09-24
CHECKED BY:	REL	DATE:	09-09-24

NORTH CAROLINA DEPARTMENT OF TRANSPORTATION
DIVISION OF HIGHWAYS

PROJECT NO.	SHEET NO.
B-5833	3D-1

Note: Invert Elevations indicated are for Bid Purposes only and shall not be used for project construction stakeout. See "Standard Specifications For Roads and Structures, Section 300-5".

LIST OF PIPES, ENDWALLS, ETC. (FOR PIPES 48 INCHES & UNDER)

| LINE & STATION / SIZE / THICKNESS OR GAUGE | OFFSET | STRUCTURE NUMBER FROM | STRUCTURE NUMBER TO | TOP ELEVATION FT. | INVERT ELEVATION FT. | INVERT ELEVATION FT. | MINIMUM REQUIRED SLOPE % | Side Drain Pipe (RCP, CSP, CAAP, HDPE, or PVC) 12 | 15 | 18 | 24 | 30 | 36 | 42 | 48 | | DO NOT USE RCP | DO NOT USE CSP | DO NOT USE CAAP | DO NOT USE HDPE | DO NOT USE PVC | R. C. PIPE CLASS III 12 | 15 | 18 | 24 | 30 | 36 | 42 | 48 | R. C. PIPE CLASS IV 12 | 15 | 18 | 24 | 30 | 36 | 42 | 48 | R. C. PIPE CLASS V 12 | 15 | 18 | 24 | 30 | 36 | 42 | 48 | ENDWALLS STD. 838.01 OR STD. 838.11 (UNLESS NOTED OTHERWISE) CY | QUANTITIES FOR DRAINAGE STRUCTURES (NOTE: TOTAL LIN. FT. FOR PAY QUANTITY SHALL BE A + (1.3 X B)) 0' THRU 5' EACH | A 5' THRU 10' LIN. FT. | B 10' AND ABOVE LIN. FT. | C.B. STD. 840.01 OR STD. 840.02 | FRAME, GRATES, AND HOOD STD. 840.03 GRATE TYPE E | F | G | CONCRETE TRANSITIONAL SECTION T.B.D.I. STD. 852.06 | C.B. STD. 852.05 | OPEN THROAT C.B. STD. 840.04 OR STD. 840.05 | D.I. STD. 840.14 OR STD. 840.15 | D.I. FRAME AND GRATES STD. 840.16 | G.D.I. TYPE "A" STD. 840.17 OR STD. 840.26 | G.D.I. TYPE "B" STD. 840.18, 840.27, OR 840.45 | G.D.I. TYPE "D" STD. 840.19 OR STD. 840.28 | G.D.I. (W.S. FLAT) FRAME WITH GRATE STD. 840.20 | G.D.I. (W.S. FLAT) FRAME W/ 2 GRATES STD. 840.20 | G.D.I. (W.S. SAG) FRAME W/ GRATE STD. 840.22 | G.D.I. (W.S. SAG) FRAME W/ 2 GRATES STD. 840.22 | G.D.I. (N.S. SAG) FRAME W/ GRATE STD. 840.24 | G.D.I. (N.S. SAG) FRAME W/ 2 GRATES STD. 840.24 | G.D.I. (N.S. FLAT) FRAME W/ GRATE STD. 840.29 | G.D.I. (N.S. FLAT) FRAME W/ 2 GRATES STD. 840.29 | J.B. STD. 840.31, 840.32, OR 840.45 | T.B.J.B. STD. 840.34 OR 840.46 | T.B.D.I. STD. 840.35 OR 840.46 | M.H. STD. 840.51, STD. 840.52, OR STD. 840.53 | M.H. FRAME AND COVER STD. 840.54 | 4-SIDED OPEN THROAT C.B. SEE DETAIL 2D-2 | CONVERT EXISTING C.B. TO J.B. | CONVERT EXISTING C.B. TO D.I. | CONVERT EXISTING D.I. TO J.B. | CONVERT EXISTING J.B. TO D.I. | ADJUST C.B. | ADJUST D.I. | | FLOWABLE FILL CY | CONCRETE COLLARS CL. "B" STD. 840.72 CY | CONCRETE AND BRICK PIPE PLUG STD. 840.71 CY | PIPE REMOVAL LIN. FT. | REMARKS |
|---|---|---|---

TGSLTW1014

COMPUTED BY:	BJH	DATE:	09-09-24
CHECKED BY:	REL	DATE:	09-09-24

NORTH CAROLINA DEPARTMENT OF TRANSPORTATION
DIVISION OF HIGHWAYS

PROJECT NO.	SHEET NO.
B-5833	3D-2

Note: Invert Elevations indicated are for Bid Purposes only and shall not be used for project construction stakeout. See "Standard Specifications For Roads and Structures, Section 300-5".

LIST OF PIPES, ENDWALLS, ETC. (FOR PIPES 48 INCHES & UNDER)

| LINE & STATION / SIZE / THICKNESS OR GAUGE | OFFSET | STRUCTURE NUMBER FROM | TO | TOP ELEVATION FT. | INVERT ELEVATION FT. | INVERT ELEVATION FT. | MINIMUM REQUIRED SLOPE % | Side Drain Pipe (RCP, CSP, CAAP, HDPE, or PVC) 12 | 15 | 18 | 24 | 30 | 36 | 42 | 48 | DO NOT USE RCP | DO NOT USE CSP | DO NOT USE CAAP | DO NOT USE HDPE | DO NOT USE PVC | R. C. PIPE CLASS III 12 | 15 | 18 | 24 | 30 | 36 | 42 | 48 | R. C. PIPE CLASS IV 12 | 15 | 18 | 24 | 30 | 36 | 42 | 48 | R. C. PIPE CLASS V 12 | 15 | 18 | 24 | 30 | 36 | 42 | 48 | ENDWALLS STD. 838.01 OR STD. 838.11 (UNLESS NOTED OTHERWISE) CY | QUANTITIES FOR DRAINAGE STRUCTURES (NOTE: TOTAL LIN. FT. FOR PAY QUANTITY SHALL BE A + (1.3 X B)) 0' THRU 5' EACH | A: 5' THRU 10' LIN. FT. | B: 10' AND ABOVE LIN. FT. | C.B. STD. 840.01 OR STD. 840.02 | FRAME, GRATES, AND HOOD STD. 840.03 GRATE TYPE E | F | G | CONCRETE TRANSITIONAL SECTION T.B.D.I. STD. 852.06 | C.B. STD. 852.05 | OPEN THROAT C.B. STD. 840.04 OR STD. 840.05 | D.I. STD. 840.14 OR STD. 840.15 | D.I. FRAME AND GRATES STD. 840.16 | G.D.I. TYPE "A" STD. 840.17 OR STD. 840.26 | G.D.I. TYPE "B" STD. 840.18, 840.27, OR 840.45 | G.D.I. TYPE "D" STD. 840.19 OR STD. 840.28 | G.D.I. (W.S. FLAT) FRAME WITH GRATE STD. 840.20 | G.D.I. (W.S. FLAT) FRAME W/ 2 GRATES STD. 840.20 | G.D.I. (W.S. SAG) FRAME W/ GRATE STD. 840.22 | G.D.I. (W.S. SAG) FRAME W/ 2 GRATES STD. 840.22 | G.D.I. (N.S. SAG) FRAME W/ GRATE STD. 840.24 | G.D.I. (N.S. SAG) FRAME W/ 2 GRATES STD. 840.24 | G.D.I. (N.S. FLAT) FRAME W/ GRATE STD. 840.29 | G.D.I. (N.S. FLAT) FRAME W/ 2 GRATES STD. 840.29 | J.B. STD. 840.31, 840.32, OR 840.45 | T.B.J.B. STD. 840.34 OR 840.46 | T.B.D.I. STD. 840.35 OR 840.46 | M.H. STD. 840.51, STD. 840.52, OR STD. 840.53 | M.H. FRAME AND COVER STD. 840.54 | 4-SIDED OPEN THROAT C.B. SEE DETAIL 2D-2 | CONVERT EXISTING C.B. TO J.B. | CONVERT EXISTING C.B. TO D.I. | CONVERT EXISTING D.I. TO J.B. | CONVERT EXISTING J.B. TO D.I. | ADJUST C.B. | ADJUST D.I. | FLOWABLE FILL CY | CONCRETE COLLARS CL. "B" STD. 840.72 CY | CONCRETE AND BRICK PIPE PLUG STD. 840.71 CY | PIPE REMOVAL LIN. FT. | REMARKS |
|---|---|---|---

TGSLTW1014

COMPUTED BY:	BJH	DATE:	09-09-24
CHECKED BY:	REL	DATE:	09-09-24

NORTH CAROLINA DEPARTMENT OF TRANSPORTATION
DIVISION OF HIGHWAYS

PROJECT NO.	SHEET NO.
B-5833	3D-3

Note: Invert Elevations indicated are for Bid Purposes only and shall not be used for project construction stakeout. See "Standard Specifications For Roads and Structures, Section 300-5".

LIST OF PIPES, ENDWALLS, ETC. (FOR PIPES 48 INCHES & UNDER)

| LINE & STATION / SIZE / THICKNESS OR GAUGE | OFFSET | STRUCTURE NUMBER FROM | STRUCTURE NUMBER TO | TOP ELEVATION FT. | INVERT ELEVATION FT. | INVERT ELEVATION FT. | MINIMUM REQUIRED SLOPE % | Side Drain Pipe (RCP, CSP, CAAP, HDPE, or PVC) 12 | 15 | 18 | 24 | 30 | 36 | 42 | 48 | DO NOT USE RCP | DO NOT USE CSP | DO NOT USE CAAP | DO NOT USE HDPE | DO NOT USE PVC | R. C. PIPE CLASS III 12 | 15 | 18 | 24 | 30 | 36 | 42 | 48 | R. C. PIPE CLASS IV 12 | 15 | 18 | 24 | 30 | 36 | 42 | 48 | R. C. PIPE CLASS V 12 | 15 | 18 | 24 | 30 | 36 | 42 | 48 | ENDWALLS STD. 838.01 OR STD. 838.11 (UNLESS NOTED OTHERWISE) CY | QUANTITIES FOR DRAINAGE STRUCTURES (NOTE: TOTAL LIN. FT. FOR PAY QUANTITY SHALL BE A + (1.3 X B)) 0' THRU 5' EACH | A 5' THRU 10' LIN. FT. | B 10' AND ABOVE LIN. FT. | C.B. STD. 840.01 OR STD. 840.02 | FRAME, GRATES, AND HOOD STD. 840.03 GRATE TYPE E | F | G | CONCRETE TRANSITIONAL SECTION T.B.D.I. STD. 852.06 | C.B. STD. 852.05 | OPEN THROAT C.B. STD. 840.04 OR STD. 840.05 | D.I. STD. 840.14 OR STD. 840.15 | D.I. FRAME AND GRATES STD. 840.16 | G.D.I. TYPE "A" STD. 840.17 OR STD. 840.26 | G.D.I. TYPE "B" STD. 840.18, 840.27, OR 840.45 | G.D.I. TYPE "D" STD. 840.19 OR STD. 840.28 | G.D.I. (W.S. FLAT) FRAME WITH GRATE STD. 840.20 | G.D.I. (W.S. FLAT) FRAME W/ 2 GRATES STD. 840.20 | G.D.I. (W.S. SAG) FRAME W/ GRATE STD. 840.22 | G.D.I. (W.S. SAG) FRAME W/ 2 GRATES STD. 840.22 | G.D.I. (N.S. SAG) FRAME W/ GRATE STD. 840.24 | G.D.I. (N.S. SAG) FRAME W/ 2 GRATES STD. 840.24 | G.D.I. (N.S. FLAT) FRAME W/ GRATE STD. 840.29 | G.D.I. (N.S. FLAT) FRAME W/ 2 GRATES STD. 840.29 | J.B. STD. 840.31, 840.32, OR 840.45 | T.B.J.B. STD. 840.34 OR 840.46 | T.B.D.I. STD. 840.35 OR 840.46 | M.H. STD. 840.51, STD. 840.52, OR STD. 840.53 | M.H. FRAME AND COVER STD. 840.54 | 4-SIDED OPEN THROAT C.B. SEE DETAIL 2D-2 | CONVERT EXISTING C.B. TO J.B. | CONVERT EXISTING C.B. TO D.I. | CONVERT EXISTING D.I. TO J.B. | CONVERT EXISTING J.B. TO D.I. | ADJUST C.B. | ADJUST D.I. | FLOWABLE FILL CY | CONCRETE COLLARS CL. "B" STD. 840.72 CY | CONCRETE AND BRICK PIPE PLUG STD. 840.71 CY | PIPE REMOVAL LIN. FT. | REMARKS |
|---|---|---|---

TGSLTW1014

COMPUTED BY:	BJH	DATE:	09-09-24
CHECKED BY:	REL	DATE:	09-09-24

NORTH CAROLINA DEPARTMENT OF TRANSPORTATION
DIVISION OF HIGHWAYS

PROJECT NO.	SHEET NO.
B-5833	3D-4

Note: Invert Elevations indicated are for Bid Purposes only and shall not be used for project construction stakeout. See "Standard Specifications For Roads and Structures, Section 300-5".

LIST OF PIPES, ENDWALLS, ETC. (FOR PIPES 54 INCHES & OVER)

| LINE & STATION / SIZE / THICKNESS OR GAUGE | OFFSET | STRUCTURE NUMBER FROM | STRUCTURE NUMBER TO | TOP ELEVATION FT. | INVERT ELEVATION FT. | INVERT ELEVATION FT. | MINIMUM REQUIRED SLOPE % | Side Drain Pipe (RCP, CSP, CAAP, HDPE, or PVC) 54 | 60 | 66 | 72 | 78 | 84 | | DO NOT USE RCP | DO NOT USE CSP | DO NOT USE CAAP | DO NOT USE HDPE | DO NOT USE PVC | R. C. PIPE CLASS III 54 | 60 | 66 | 72 | 78 | 84 | | R. C. PIPE CLASS IV 54 | 60 | 66 | 72 | 78 | 84 | | R. C. PIPE CLASS V 54 | 60 | 66 | 72 | 78 | 84 | | STRUCTURAL PLATE PIPE 60 | 66 | 72 | | | REINFORCED ENDWALLS CY | DRAINAGE STRUCTURE MASONRY CY | C.B. STD. 840.01 OR STD. 840.02 | FRAME, GRATES, AND HOOD STD. 840.03 GRATE TYPE E | F | G | | CONCRETE TRANSITIONAL SECTION T.B.D.I. STD. 852.06 | C.B. STD. 852.05 | OPEN THROAT C.B. STD. 840.04 OR STD. 840.05 | CONCRETE BRIDGE APPROACH D.I. STD. 840.13 | D.I. STD. 840.14 OR STD. 840.15 | D.I. FRAME AND GRATES STD. 840.16 | G.D.I. TYPE "A" STD. 840.17 OR STD. 840.26 | G.D.I. TYPE "B" STD. 840.18, 840.27, OR 840.45 | G.D.I. TYPE "D" STD. 840.19 OR STD. 840.28 | G.D.I. (W.S. FLAT) FRAME WITH GRATE STD. 840.20 | G.D.I. (W.S. FLAT) FRAME W/ 2 GRATES STD. 840.20 | G.D.I. (W.S. SAG) FRAME W/ GRATE STD. 840.22 | G.D.I. (W.S. SAG) FRAME W/ 2 GRATES STD. 840.22 | G.D.I. (N.S. SAG) FRAME W/ GRATE STD. 840.24 | J.B. STD. 840.31, 840.32, OR 840.45 | ANGLED VANE GRATES AND FRAMES STD. 840.33 | T.B.J.B. STD. 840.34 OR 840.46 | T.B.D.I. STD. 840.35 OR 840.46 | T.B.D.I. FOR STEEL GRATES STD. 840.36 | STEEL FRAME WITH TWO GRATES STD. 840.37 | TEMP STEEL PLATE COVER MASONRY DRAINAGE | SPRING BOX STD. 840.41 | M.H. STD. 840.51, STD. 840.52, OR STD. 840.53 | M.H. FRAME AND COVER STD. 840.54 | SPECIAL DESIGN TBJB, SEE DETAIL 2D-3 | CONVERT EXISTING C.B. TO J.B. | CONVERT EXISTING C.B. TO D.I. | CONVERT EXISTING D.I. TO J.B. | CONVERT EXISTING J.B. TO D.I. | ADJUST C.B. | ADJUST D.I. | | FLOWABLE FILL CY | CONCRETE COLLARS CL. "B" STD. 840.72 CY | CONCRETE AND BRICK PIPE PLUG STD. 840.71 CY | PIPE REMOVAL LIN. FT. | REMARKS |
|---|---|---|---

COMPUTED BY:	BJH	DATE:	9/9/2024
CHECKED BY:	REL	DATE:	9/9/2024

(08-05-21)

TIP/PROJECT NO.	SHEET NO.
B-5833	3D- 5

STATE OF NORTH CAROLINA
DIVISION OF HIGHWAYS

Note: Not intended for use in determining bid quantities. Only a stormwater control measure device summary list for easy reference and location.

SUMMARY OF STORMWATER CONTROL MEASURES

CONST SHEET NO.	SCM TYPE	LINE	STATION	Location LT/RT/CL	Latitude	Longitude
5	Riprap Energy Dissipator Basin	RAMPD	12+92	RT	36.198367	80.813168

SUMMARY OF STORMWATER CONTROL MEASURES

CONST SHEET NO.	SCM TYPE	LINE	STATION	Location LT/RT/CL	Latitude	Longitude

SUMMARY OF STORMWATER CONTROL MEASURES

CONST SHEET NO.	SCM TYPE	LINE	STATION	Location LT/RT/CL	Latitude	Longitude

COMPUTED BY: Eddie Beverly DATE: 11-26-24
CHECKED BY: Siping Yang DATE: 11-26-24

(2-3-23)

STATE OF NORTH CAROLINA
DIVISION OF HIGHWAYS

PROJECT NO.	SHEET NO.
B-5833	3G-1

SUMMARY OF SUBSURFACE DRAINAGE

LINE	Station	Station	Location LT/RT/CL	Drain Type* UD/BD/SD	LF
CONTINGENCY				SD	250
				TOTAL LF:	250

*UD = Underdrain
*BD = Blind Drain
*SD = Subsurface Drain

SUMMARY OF AGGREGATE SUBGRADE/STABILIZATION

LINE	Station	Station	Aggregate Type* ASU(1/2)/ AST	Aggregate Thickness INCHES [8" for ASU(2)]	Shallow Undercut CY	Class IV Subgrade Stabilization TONS	Geotextile for Subgrade Stabilization SY	Stabilizer Aggregate TONS	Class IV Aggregate Stabilization TONS
CONTINGENCY				12"	150	300	450		
			TOTAL CY/TONS/SY:		150	300**	450**	0	0

*ASU(1/2) = Aggregate Subgrade (Type 1 or 2)
*AST = Aggregate Stabilization
**Total tons of "Class IV Subgrade Stabilization" and total square yards of "Geotextile for Soil Stabilization" are only the estimated quantities for ASU(1/2)/AST and may only represent a portion of the subgrade stabilization and geotextile quantities shown in the Item Sheets of the Proposal.

PROJ. REFERENCE NO.	SHEET NO.
B-5833	3P-1

STATE OF NORTH CAROLINA
DIVISION OF HIGHWAYS

PARCEL INDEX SHEET

PARCEL No.	SHEET No.	PROPERTY OWNER NAME
1	4	MICHEAL J. WADDELL
2	4	SAMUEL L. BENTON - LE SARAH P. BENTON - LE RANDY LEE BENTON CINDY J. BENTON
3	4	JAMIE CAUDILL
4	4	RYAN D. BLEDSOE ASHLEY BLEDSOE
5	4	NOVELLA KIRK
6	4	KIMBERLY FAYE HAYNES DAVID GRAY SWAIM TRUSTEES OF TRINITY PENTECOSTAL CHURCH
7	4	CHERYL V. BLEDSOE
8	4	RYAN D. BLEDSOE ASHLEY BLEDSOE
9	4	JO ANN C. BARBER
10	4	KENNETH WARD CARTER JESSE CONNIE CARTER
11	4 & 5	ASMC LLC
11A	5	ASMC LLC
11B	5	ASMC LLC
12	4 & 5	JACKSON
13	5	INDIGO HOSPITALITY ONE, LLC
14	5 & 6	MARION G. WELBORN FAMILY LIMITED PARTNERSHIP
15	6	LANNY G. WILKINS BENNY H. WILKINS
16	6	ANDREA NICOLE MARSH

PARCEL No.	SHEET No.	PROPERTY OWNER NAME

Docusign Envelope ID: E03116D9-9111-4A69-87F1-46AF0CF86082

8/17/99

SEE SHEET 2B-2
FOR INTERSECTION DETAILS

SEE SHEET 07 FOR -L- PROFILE
SEE SHEET 08 FOR -Y1- & -Y2- PROFILES

DRIVE RADII ARE 10' UNLESS OTHERWISE NOTED
CHANNELIZATION RADII ARE 3' UNLESS OTHERWISE NOTED
RADII DIMENSIONS ARE TO FACE OF CURB (F/C) UNLESS OTHERWISE NOTED

REVISIONS

-L-

PI Sta 17+87.66	PI Sta 22+16.73
Δ = 6° 34' 02.4" (LT)	Δ = 13° 17' 34.0" (RT)
D = 3° 47' 39.9"	D = 3° 47' 39.9"
L = 173.08'	L = 350.32'
T = 86.63'	T = 175.95'
R = 1,510.00'	R = 1,510.00'
SE = 0.05	SE = 0.05
Lr = 125'	Lr = 125'

-Y1-

PI Sta 10+91.08
Δ = 18° 34' 00.1" (RT)
D = 17° 37' 46.1"
L = 105.32'
T = 53.12'
R = 325.00'

-Y2-

PI Sta 12+09.78
Δ = 48° 13' 26.2" (LT)
D = 25° 48' 32.1"
L = 186.85'
T = 99.36'
R = 222.00'

① = -L- POC Sta.18+61.28= -Y1- POT Sta. 12+06.74

② = -L- POC Sta.18+64.39= -Y2- POT Sta. 10+00.00

③ = -L- PT Sta. 18+74.11

DETAIL 8
STANDARD BASE DITCH
(Not to Scale)

Natural Ground, 2:1, d, D, B, 2:1, Natural Ground

*Rip-Rap to be embedded below stream bed.

Min. D= 3.0 Ft.
Max. d= 3.0 Ft.
B= 4.0 Ft.

Type of Liner= *Class 'I' Rip-Rap

-DRW1- STA. 12+27 RT (FROM STR. #0531)

PROJECT REFERENCE NO.	SHEET NO.
B-5833	04

R/W SHEET NO.

ROADWAY DESIGN ENGINEER
STATE OF NORTH CAROLINA PROFESSIONAL SEAL 027418 ENGINEER MARCUS LOWERY
3/5/2026

HYDRAULICS ENGINEER
STATE OF NORTH CAROLINA PROFESSIONAL SEAL 044158 ENGINEER BENJAMIN J. VERNICKAR
3/5/2026

DOCUMENT NOT CONSIDERED FINAL UNLESS ALL SIGNATURES COMPLETED

TGS ENGINEERS
706 HILLSBOROUGH ST. SUITE 200
RALEIGH, NC 27603
PH (919) 773-8887
CORP. LICENSE NO.: C-0275

NAD 83 NA 2011

BEGIN TIP PROJECT B-5833
-L- POT Sta. 10+50.00

-L- POT Sta. 10+00.00

BEGIN CONSTRUCTION
-L- POT 10+15.00

-Y1- POT Sta. 10+00.00
S 24° 11' 15.5" W
-Y1- PC Sta. 10+37.96
-Y1- PT Sta. 11+43.27

-L- PC Sta. 17+01.03

-Y2- PC Sta. 11+10.42

BEGIN CONSTRUCTION
-Y1- POC 11+00.00

END CONSTRUCTION
-Y2- POC 12+30.00

-Y2- PT Sta. 12+97.27

-L- STA. 21+00.00 MATCHLINE SEE SHEET 05

-L- PC Sta. 20+40.78

S 41° 09' 54.1" E
S 42° 45' 15.6" W
S 41° 03' 48.1" W
S 47° 43' 56.5" E

① MICHEAL J. WADDELL
DB 702 PG 472
PB 1PG 67

② SAMUEL L. BENTON - LE
SARAH P. BENTON - LE
RANDY LEE BENTON
CINDY J. BENTON
DB 1162 PG 149

③ JAMIE CAUDILL
DB 1335 PG 364
PB 1PG 67

④ RYAN D. BLEDSOE
ASHLEY BLEDSOE
DB 920 PG 172
DB 920 PG 176

⑤ NOVELLA KIRK
DB 237 PG 344
PB 3 PG 305

⑥ KIMBERLY FAYE HAYNES
DAVID GRAY SWAIM
TRUSTEES OF TRINITY
PENTECOSTAL CHURCH
DB 946 PG 527

⑦ CHERYL V. BLEDSOE
DB 464 PG 744

⑧ RYAN D. BLEDSOE
ASHLEY BLEDSOE
DB 1158 PG 131

⑨ JO ANN C. BARBER
WB 14E PG 347
DB 940 PG 256

⑩ KENNETH WARD CARTER
JESSE CONNIE CARTER
WB 08E PG 121
DB 384 PG 790

⑪ ASMC LLC
DB 1255 PG 599

⑫ SHARON V. JACKSON (LE)
AMBER LEIGH JACKSON
TYLER SCOTT JACKSON
DB 1039 PG 360

13 INDIGO HOSPITALITY ONE, LLC
DB 1222 PG 88

RANDY STEPHEN ASHLEY
AMANDA LOU ASHLEY
DB 230 PG 663

MICHEAL J. WADDELL
DB 702 PG 472
PB 1PG 67

FLETCHER SMITH & ASSOCIATES, LTD
DB 861PG 185

NOVELLA KIRK
DB 407 PG 204
PB 3 PG 305

CULVERT CHANNEL IMPROVEMENTS (DOWNSTREAM) SEE DETAIL 2

CULVERT CHANNEL IMPROVEMENTS (UPSTREAM) SEE DETAIL 1

SPEC. LATERAL 'V' DITCH SEE DETAIL 3
CLASS 'B' RIP-RAP
EST. 50 TONS
EST. 130 SYGF

CLASS 'B' RIP-RAP
EST. 2 TONS
EST. 7 SYGF

CLASS 'B' RIP-RAP
EST. 3 TONS
EST. 10 SYGF

4' STD. BASE DITCH
SEE DETAIL 8
CLASS 'I' RIP-RAP
EST. 250 TONS
EST. 1000 CY DDE
L=190 FT
S=1.9%

CLASS 'B' RIP-RAP
EST. 2 TONS
EST. 7 SYGF

SPEC. CUT DITCH SEE DETAIL 4

FALSE SUMP SEE DETAIL 5

FENCE TO BE RESET BY PROPERTY OWNER

DO NOT DISTURB PORCH

SEAL ABANDONED WELL

PROPERTY LINE = CENTER OF BRANCH

TO JONESVILLE

PIN OAK RD SR1433

WILKINS RD SR1393

MOUNTAIN CHEST RD SR1394

UNKNOWN SIZE & MATERIAL

DETAIL 1
CULVERT CHANNEL IMPROVEMENTS (UPSTREAM)
(Not to Scale)

CLASS 'I' RIP-RAP (TO BE EMBEDED BELOW STREAMBED)
PROP. EXCAVATION
1.5' (MIN.)
2:1 (MAX)
PROP CHANNEL BED EXIST. TO 7'
LENGTH=30' (FROM CULVERT FACE)
EST. 50 CY EXCAVATION
EST. 60 TONS CLASS 'I' RIP-RAP

-L- STA. 13+60 RT

DETAIL 2
CULVERT CHANNEL IMPROVEMENTS (DOWNSTREAM)
(Not to Scale)

CLASS 'I' RIP-RAP (TO BE EMBEDED BELOW STREAMBED)
PROP. EXCAVATION
1.5' (MIN.)
2:1 (MAX)
PROP CHANNEL BED 7' TO EXIST.
LENGTH=45' (FROM CULVERT FACE)
EST. 70 CY EXCAVATION
EST. 80 TONS CLASS 'I' RIP-RAP

-L- STA. 12+15 LT

DETAIL 3
SPECIAL LATERAL 'V' DITCH
(Not to Scale)

Natural Ground, 2:1, d, D, 4:1 or Flatter, Fill Slope, Geotextile

Type of Liner= Class 'B' Rip-Rap
Min. D= 1.5 Ft.
Max. d= 1.5 Ft.

FROM -L- STA. 12+24 TO STA. 13+34 LT

DETAIL 4
SPECIAL CUT DITCH
(Not to Scale)

Natural Ground, 4:1, D, 4:1 or Flatter, Front Ditch Slope

Min. D=1.5 Ft.

FROM -L- STA. 16+50 TO STA. 20+50 LT
FROM -L- STA. 20+00 TO STA. 20+61 RT

DETAIL 5
FALSE SUMP
(Not to Scale)

Outside Ditch Traffic Flow, 6:1, 2:1, 1.5', 2', GI etc.

S=Ditch Slope
℄ Proposed Ditch

-L- STA. 19+90 RT

11/20/2024
I:\Projects\NCDOT\B-5833\Roadway\Proj\b5833_rdy_psh_04.dgn
(Description Coming)

Docusign Envelope ID: E03116D9-9111-4A69-87F1-46AF0CF86082

PROJECT REFERENCE NO.	SHEET NO.
B-5833	05
R/W SHEET NO.	

ROADWAY DESIGN ENGINEER
STEVEN J. LOWERY
NORTH CAROLINA PROFESSIONAL SEAL 027418 ENGINEER
MARCUS LOWERY
3/5/2026

HYDRAULICS ENGINEER
BENJAMIN J. VENEGAS
NORTH CAROLINA PROFESSIONAL SEAL 044158 ENGINEER
BENJAMIN J. VENEGAS
3/5/2026

DOCUMENT NOT CONSIDERED FINAL UNLESS ALL SIGNATURES COMPLETED

TGS ENGINEERS
706 HILLSBOROUGH ST. SUITE 200
RALEIGH, NC 27603
PH (919) 773-8887
CORP. LICENSE NO.: C-0275

-DRWI- POT Sta. 10+00.00
BEGIN CONSTRUCTION

-L-
PI Sta 22+16.73
Δ = 13° 17' 34.0" (RT)
D = 3° 47' 39.9"
L = 350.32'
T = 175.95'
R = 1,510.00'
SE = 0.05
Lr = 125'

PI Sta 35+80.40
Δ = 19° 22' 00.5" (RT)
D = 2° 29' 28.0"
L = 777.43'
T = 392.46'
R = 2,300.00'
SE = 0.04
Lr = 100'

-Y3- POT Sta. 10+00.00

① = -L- POC Sta. 23+58.07= -RAMPD- POT Sta. 10+00.00
② = -L- POC Sta. 23+74.56= -DRWI- POT Sta. 15+41.78
③ = -L- PT Sta. 23+91.10= -LOOPD- POT Sta. 10+00.00
④ = -DRWI- PT Sta. 14+56.19

-RAMPD-
PI Sta 15+14.80
Δ = 79° 48' 27.8" (LT)
D = 19° 05' 54.9"
L = 417.87'
T = 250.87'
R = 300.00'
SE = 0.08
(MATCH EXIST)

PI Sta 19+19.36
Δ = 2° 11' 19.2" (RT)
D = 7° 09' 43.1"
L = 30.56'
T = 15.28'
R = 800.00'

PI Sta 19+87.87
Δ = 7° 10' 02.0" (RT)
D = 6° 44' 26.4"
L = 106.33'
T = 53.23'
R = 850.00'

PI Sta 21+00.74
Δ = 14° 39' 00.9" (RT)
D = 12° 19' 18.0"
L = 118.90'
T = 59.78'
R = 465.00'

PI Sta 23+13.12
Δ = 19° 19' 38.4" (RT)
D = 6° 21' 58.3"
L = 303.59'
T = 153.25'
R = 900.00'

-DRWI-
PI Sta 14+11.25
Δ = 35° 30' 50.8" (RT)
D = 38° 11' 49.9"
L = 92.98'
T = 48.04'
R = 150.00'
SE = 0.04

-LOOPD-
PI Sta 15+47.73
Δ = 97° 59' 42.0" (LT)
D = 21° 13' 14.4"
L = 461.79'
T = 310.57'
R = 270.00'
SE = 0.08
(MATCH EXIST)

PI Sta 17+47.07
Δ = 32° 30' 49.5" (LT)
D = 34° 43' 29.0"
L = 93.63'
T = 48.11'
R = 165.00'
(MATCH EXIST)

PI Sta 18+80.67
Δ = 60° 11' 11.0" (LT)
D = 37° 41' 40.5"
L = 159.67'
T = 88.09'
R = 152.00'

-LOOPA-
PI Sta 12+88.19
Δ = 86° 29' 04.5" (RT)
D = 26° 46' 25.4"
L = 323.02'
T = 201.26'
R = 214.00'
SE = 0.08
(MATCH EXIST)
-L- PC Sta. 31+87.94

PI Sta 14+72.65
Δ = 23° 36' 29.8" (RT)
D = 19° 05' 54.9"
L = 123.61'
T = 62.70'
R = 300.00'
(MATCH EXIST)

PI Sta 15+68.37
Δ = 4° 49' 52.7" (RT)
D = 6° 56' 41.8"
L = 69.57'
T = 34.80'
R = 825.00'

DETAIL 10
STANDARD 'V' DITCH
(Not to Scale)
Natural Ground, 2:1, D, d, 2:1, Natural Ground, Geotextile
Type of Liner= Class 'B' Rip-Rap
Min. D= 2.0 Ft.
Max. d= 2.0 Ft.
-LOOPD- STA. 17+03 to 17+20 LT
-LOOPD- STA. 17+20 to 21+06 LT

DETAIL 9
CONCRETE DITCH BEHIND RETAINING WALL
(Not to Scale)
RETAINING WALL, BOND BREAKER, VARIES, 2:1, NATURAL GROUND, D, B, 4"
D= 1.0'
B= 0' (0' TO 2.0')
-Y3- STA. 13+41 TO STA. 14+12 RT
-Y3- STA. 14+88 TO STA. 15+53 RT
-Y3- STA. 15+19 TO STA. 15+89 LT
-Y3- STA. 16+65 TO STA. 17+29 LT

NAD 83 NA 2011

MARION WELBORN
JEWELL W. WELBORN
DB 1081 PG 311
DB 50 PG 201

MARION G. WELBORN
FAMILY LIMITED PARTNERSHIP
DB 726 PG 168

(13) INDIGO HOSPITALITY ONE, LLC
DB 1222 PG 88

(11) ASMC LLC
DB 1255 PG 599

(11A) ASMC LLC
DB 1255 PG 599

(11B) ASMC LLC
DB 1255 PG 599

(12) SHARON V. JACKSON (LE)
AMBER LEIGH JACKSON
TYLER SCOTT JACKSON
DB 1039 PG 360

(14) MARION G. WELBORN
FAMILY LIMITED PARTNERSHIP
DB 574 PG 156
PB 8 PG 827

-L- POT Sta. 27+76.48=
-Y3- POT Sta. 15+38.59

END BRIDGE
-L- POT 29+01.48

END APP. SLAB
-L- POT 29+14.87

BEGIN APP. SLAB
-L- POT 26+38.09

BEGIN BRIDGE
-L- POT 26+51.48

-LOOPD- PC Sta. 12+37.16
-LOOPD- PCC Sta. 19+52.25

END CONSTRUCTION
-LOOPD- POC 19+51.35

-LOOPD- PCC Sta. 16+98.95
-LOOPD- PCC Sta. 17+92.58

-RAMPD- PC Sta. 12+63.93
-RAMPD- PT Sta. 16+81.80
-RAMPD- PC Sta. 19+04.08
-RAMPD- PCC Sta. 19+34.64
-RAMPD- PCC Sta. 20+40.97
-RAMPD- PCC Sta. 21+59.86

END CONSTRUCTION
-RAMPD- POC 22+38.90

-LOOPA- PCC Sta. 14+09.95
-LOOPA- PCC Sta. 15+33.56
-LOOPA- PCC Sta. 16+03.13

END CONSTRUCTION
-LOOPA- POC 14+80.93

MATCHLINE -L- STA. 21+00.00 SEE SHEET 04

MATCHLINE -L- STA. 34+00.00 SEE SHEET 06

MATCHLINE -LOOPA- STA. 13+50.00 SEE SHEET 06

MATCHLINE -Y3- STA. 23+00.00 SEE SHEET 06

-DRW1-
350/550
75/125 175/250
-L- US 21 BUS
3,250/3,625 3,825/4,250
575/625 850/950 975/1175 1150/1325
-RAMPD- I-77 SB
-LOOPD- I-77 SB
2026/2046 ADT

SEE SHEET 2B-2 FOR INTERSECTION DETAILS

SEE SHEET 07 FOR -L- PROFILE
SEE SHEET 08 FOR -DRW1 PROFILE
SEE SHEET 09 FOR -RAMPD- PROFILE
SEE SHEET 09 FOR -LOOPD- PROFILE
SEE SHEET 10 FOR -Y3- PROFILE
SEE SHEET 11 FOR -LOOPA- PROFILE

CHANNELIZATION RADII ARE 3' UNLESS OTHERWISE NOTED

RADII DIMENSIONS ARE TO FACE OF CURB (F/C) UNLESS OTHERWISE NOTED

DRIVE RADII ARE 10' UNLESS OTHERWISE NOTED

DETAIL 4
SPECIAL CUT DITCH
(Not to Scale)
Natural Ground, 4:1, D, 4:1 or Flatter, Front Ditch Slope
Min. D=1.5 Ft.
FROM -L- STA. 21+50 TO STA. 22+50 RT
FROM -LOOPD- STA. 11+00 TO STA. 11+50 LT
FROM -L- STA. 30+50 TO STA. 34+00 RT

DETAIL 5
FALSE SUMP
(Not to Scale)
Outside Ditch Traffic Flow, 6:1, 2:1, 1.5', 2', GI etc., S
S=Ditch Slope
℄ Proposed Ditch
-LOOPD- STA. 11+64 LT

REVISIONS

8/17/99

3/3/2026
S:\Projects\NCDOT\B-5833\Roadway\Proj\b5833_rdy_psh_05.dgn
(User: mjlowery)

Docusign Envelope ID: E03116D9-9111-4A69-87F1-46AF0CF86082

PROJECT REFERENCE NO.	SHEET NO.
B-5833	06
R/W SHEET NO.	

ROADWAY DESIGN ENGINEER
N.C. PROFESSIONAL SEAL 027418 ENGINEER MARCUS LOWERY
3/5/2026

HYDRAULICS ENGINEER
N.C. PROFESSIONAL SEAL 044158 ENGINEER BENJAMIN J. HERNICAR
3/5/2026

DOCUMENT NOT CONSIDERED FINAL UNLESS ALL SIGNATURES COMPLETED

TGS ENGINEERS
706 HILLSBOROUGH ST. SUITE 200
RALEIGH, NC 27603
PH (919) 773-8887
CORP. LICENSE NO.: C-0275

NAD 83 NA 2011

① = -L- POC Sta. 35+81.31= -LOOPA- POT Sta. 10+00.00
② = -L- POC Sta. 35+97.31= -Y4- POT Sta. 13+76.70
③ = -L- POC Sta. 36+13.35= -RAMPA- POT Sta. 10+00.00
④ = -RAMPA- PC Sta. 10+29.17

END TIP PROJECT B-5833
-L- POC Sta. 41+00.00

-L-

PI Sta 35+80.40	PI Sta 41+08.44
Δ = 19° 22' 00.5" (RT)	Δ = 10° 53' 48.1" (RT)
D = 2° 29' 28.0"	D = 3° 49' 11.0"
L = 777.43'	L = 285.27'
T = 392.46'	T = 143.07'
R = 2,300.00'	R = 1,500.00'
SE = 0.04	SE = EXIST.
Lr = 100'	

-RAMPA-

PI Sta 12+79.27	PI Sta 15+90.37	PI Sta 17+39.05
Δ = 31° 03' 34.4" (LT)	Δ = 13° 37' 04.8" (LT)	Δ = 10° 51' 43.1" (LT)
D = 6° 21' 58.3"	D = 9° 19' 53.6"	D = 7° 09' 43.1"
L = 487.88'	L = 145.93'	L = 151.66'
T = 250.10'	T = 73.31'	T = 76.06'
R = 900.00'	R = 614.00'	R = 800.00'
SE = 0.06	(MATCH EXIST)	(MATCH EXIST)
(MATCH EXIST)		

-LOOPA-

PI Sta 12+88.19
Δ = 86° 29' 04.5" (RT)
D = 26° 46' 25.4"
L = 323.02'
T = 201.26'
R = 214.00'
SE = 0.08
(MATCH EXIST)

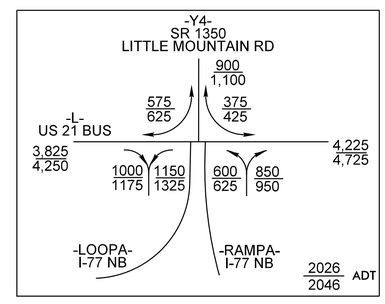

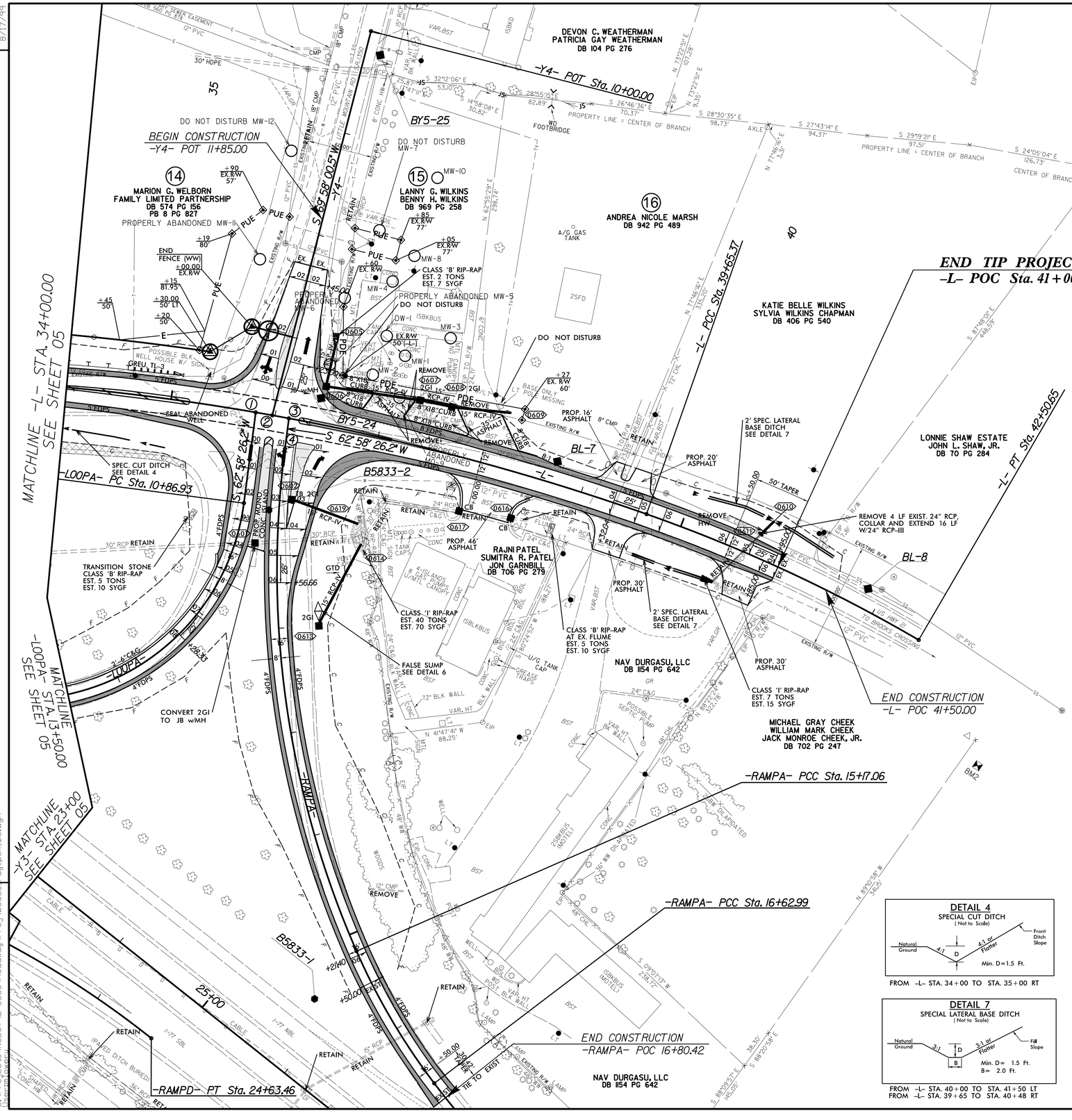

FROM -L- STA. 34+00 TO STA. 35+00 RT

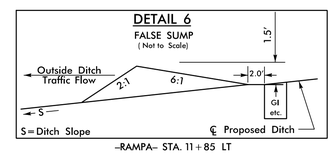

-RAMPA- STA. 11+85 LT

FROM -L- STA. 40+00 TO STA. 41+50 LT
FROM -L- STA. 39+65 TO STA. 40+48 RT

SEE SHEET 2B-2 FOR INTERSECTION DETAILS

SEE SHEETS 07 & 08 FOR -L- PROFILE
SEE SHEET 10 FOR -Y3- PROFILE
SEE SHEET 10 FOR -Y4- PROFILE
SEE SHEET 11 FOR -LOOPA- PROFILE
SEE SHEET 11 FOR -RAMPA- PROFILE

DRIVE RADII ARE 10' UNLESS OTHERWISE NOTED
CHANNELIZATION RADII ARE 3' UNLESS OTHERWISE NOTED
RADII DIMENSIONS ARE TO FACE OF CURB (F/C) UNLESS OTHERWISE NOTED

REVISIONS

8/17/99

2/5/2026
c:\Users\...\Projects\NCDOT\B-5833\Roadway\Proj\b5833_rdy_psh_06.dgn
User: mlowery

Docusign Envelope ID: E03116D9-9111-4A69-87F1-46AF0CF86082

5/28/99

TGS ENGINEERS
706 HILLSBOROUGH ST. SUITE 200
RALEIGH, NC 27603
PH (919) 773-8887
CORP. LICENSE NO.: C-0275

PROJECT REFERENCE NO.	SHEET NO.
B-5833	07

ROADWAY DESIGN ENGINEER
NORTH CAROLINA PROFESSIONAL SEAL 027418 ENGINEER MARCUS LOWERY
3/5/2026

HYDRAULICS ENGINEER
NORTH CAROLINA PROFESSIONAL SEAL 044158 ENGINEER BENJAMIN J. HENSGEN
3/5/2026

DOCUMENT NOT CONSIDERED FINAL UNLESS ALL SIGNATURES COMPLETED

EXISTING GROUND
PROPOSED GRADE
LEFT DITCH GRADE
RIGHT DITCH GRADE

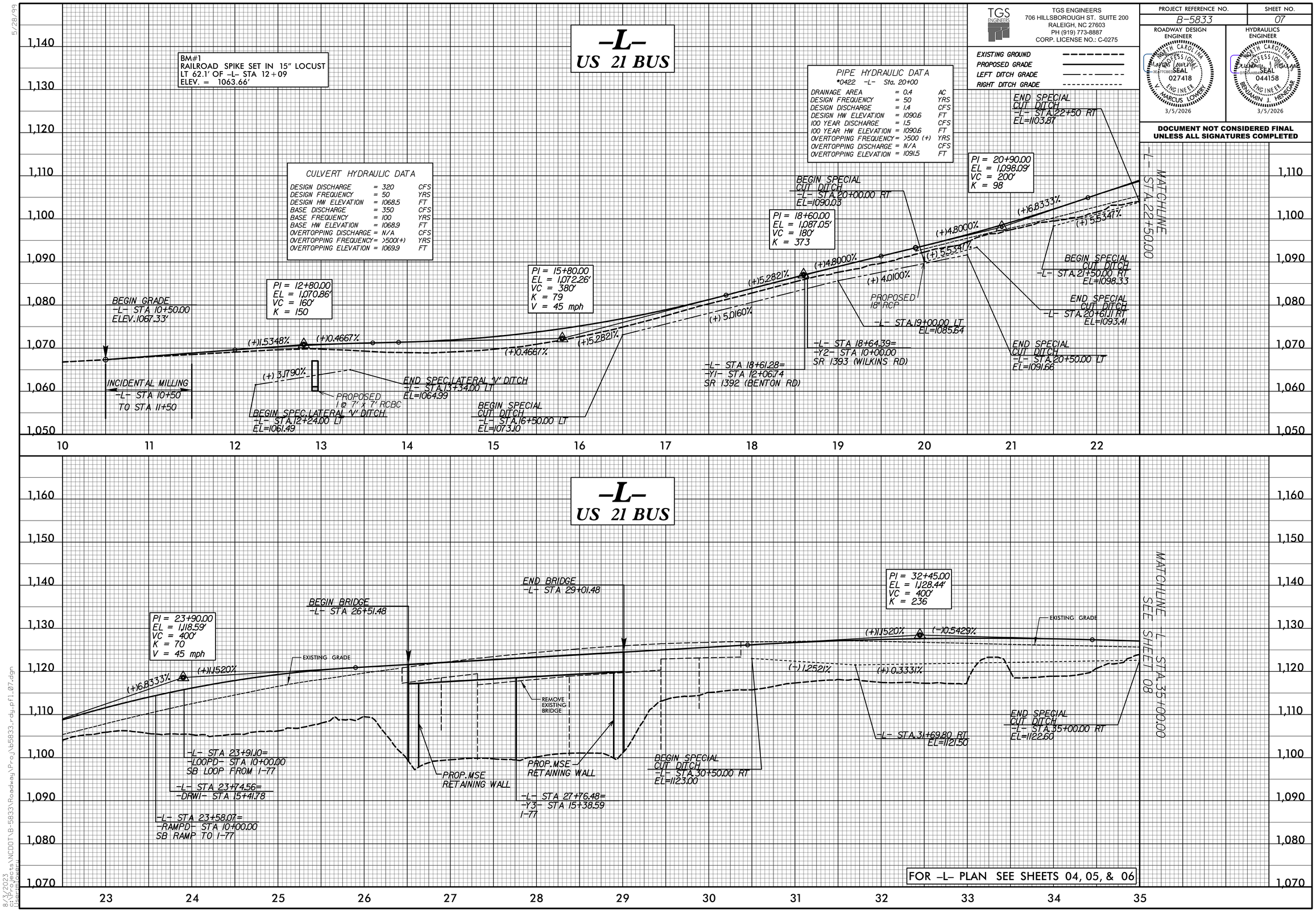

FOR -L- PLAN SEE SHEETS 04, 05, & 06

8/3/2023
R:\Roadway\Proj\B5833_rdy_pf1_07.dgn

Docusign Envelope ID: E03116D9-9111-4A69-87F1-46AF0CF86082

5/28/99

TGS ENGINEERS
706 HILLSBOROUGH ST. SUITE 200
RALEIGH, NC 27603
PH (919) 773-8887
CORP. LICENSE NO.: C-0275

PROJECT REFERENCE NO.	SHEET NO.
B-5833	08

ROADWAY DESIGN ENGINEER — NORTH CAROLINA PROFESSIONAL SEAL 027418 — MARCUS LOWERY — 3/5/2026

HYDRAULICS ENGINEER — NORTH CAROLINA PROFESSIONAL SEAL 044158 — BENJAMIN J. HENSCHOR — 3/5/2026

DOCUMENT NOT CONSIDERED FINAL UNLESS ALL SIGNATURES COMPLETED

EXISTING GROUND
PROPOSED GRADE
LEFT DITCH GRADE
RIGHT DITCH GRADE

-L- US 21 BUS

PIPE HYDRAULIC DATA
*0610 -L- Sta. 40+64

DRAINAGE AREA	= 3.8	AC
DESIGN FREQUENCY	= 50	YRS
DESIGN DISCHARGE	= 10	CFS
DESIGN HW ELEVATION	= 1124.3	FT
100 YEAR DISCHARGE	= 11	CFS
100 YEAR HW ELEVATION	= 1124.4	FT
OVERTOPPING FREQUENCY	= >500 (+)	YRS
OVERTOPPING DISCHARGE	= N/A	CFS
OVERTOPPING ELEVATION	= 1124.8	FT

BM#2
RAILROAD SPIKE SET IN 20" POPLAR
N=894352' E=1466072'
ELEV. = 1133.16'

BEGIN 2' SPEC. LATERAL BASE DITCH
-L- STA 40+00.00 LT
EL=1124.18

PI = 39+10.00
EL = 1,124.83'
VC = 340'
K = 166

-L- STA 40+79.04 LT
EL=1122.65

END GRADE
-L- STA 41+00.00
ELEV.1127.68'

EXISTING 24" RCP

(-)0.5429%
(+)1.5000%
(-)1.9357%
(+)3.9111%
(+)0.4249%

INCIDENTAL MILLING
-L- STA 40+00
TO STA 41+00

END 2' SPEC. LATERAL BASE DITCH
-L- STA 41+50.00 LT
EL=1125.43

-L- STA 36+13.35=
-RAMPA- STA 10+00.00
NB RAMP FROM I-77

-L- STA 35+97.31=
-Y4- STA 13+76.70
SR 1350 (LITTLE MOUNTAIN RD)

-L- STA 35+81.31=
-LOOPA- STA 10+00.00
NB RAMP TO I-77

BEGIN 2' SPEC. LATERAL BASE DITCH
-L- STA 39+85.15 RT
EL=1118.29

END 2' SPEC. LATERAL BASE DITCH
-L- STA 40+47.52 RT
EL=1118.64

MATCHLINE -L- STA 35+00.00 SEE SHEET 07

FOR -L- PLAN SEE SHEET 06

-Y1- SR 1392

BEGIN GRADE
-Y1- STA 11+00.00
ELEV.1089.71'

PI = 11+82.00
EL = 1,086.67'
VC = 20'
K = 8

END GRADE
-Y1- STA 11+94.74=
-L- STA 18+61.28
(12' LT)
ELEV.1086.53'

PROPOSED 18" RCP

(-)13.7073%
(-)1.0989%
(+)4.0000%

PIPE HYDRAULIC DATA
*0416 -Y1- Sta. 11+71

DRAINAGE AREA	= 1.3	AC
DESIGN FREQUENCY	= 25	YRS
DESIGN DISCHARGE	= 4.0	CFS
DESIGN HW ELEVATION	= 1086.0	FT
100 YEAR DISCHARGE	= 4.7	CFS
100 YEAR HW ELEVATION	= 1086.1	FT
OVERTOPPING FREQUENCY	= >500 (+)	YRS
OVERTOPPING DISCHARGE	= N/A	CFS
OVERTOPPING ELEVATION	= 1087.3	FT

-Y1- STA 12+06.74=
-L- STA 18+61.28
ELEV.1087.01'

FOR -Y1- PLAN SEE SHEET 04

-Y2- SR 1393

BEGIN GRADE
-Y2- STA 10+12.00=
-L- STA 18+64.72
(12' RT)
ELEV.1087.62'

END GRADE
-Y2- STA 11+60.00
ELEV.1083.03'

PI = 10+32.00
EL = 1,087.42'
VC = 40'
K = 14

PI = 11+15.00
EL = 1,084.15'
VC = 90'
K = 62

(-)1.0000%
(-)3.9398%
(+)3.8333%
(-)2.4889%

-Y2- STA 10+00.00=
-L- STA 18+64.39
ELEV.1087.16'

INCIDENTAL MILLING
-Y2- STA 11+00
TO STA 11+60

FOR -Y2- PLAN SEE SHEET 04

-DRW1-

BEGIN GRADE
-DRW1- STA 10+50.00
ELEV.1093.21'

PI = 12+30.00
EL = 1,092.67'
VC = 220'
K = 21

PI = 13+90.00
EL = 1,108.67'
VC = 100'
K = 23

PI = 15+04.06
EL = 1,115.12'
VC = 45'
K = 12

END GRADE
-DRW1- STA 15+26.56=
-L- STA 23+70.82
(14.75' LT)
ELEV.1115.57'

(-)0.3000%
(+)10.0000%
(+)10.0000%
(+)5.6549%
(+)2.0000%
(-)2.9566%

-DRW1- STA 15+41.78=
-L- STA 23+74.56
ELEV.1115.12'

INCIDENTAL MILLING
-DRW1- STA 10+00
TO STA 11+00

PROPOSED 60" RCP

PIPE HYDRAULIC DATA
*0530-DRW1- Sta. 13+01

DRAINAGE AREA	= 70	AC
DESIGN FREQUENCY	= 10	YRS
DESIGN DISCHARGE	= 100	CFS
DESIGN HW ELEVATION	= 1090.8	FT
100 YEAR DISCHARGE	= 140	CFS
100 YEAR HW ELEVATION	= 1092.1	FT
OVERTOPPING FREQUENCY	= 500	YRS
OVERTOPPING DISCHARGE	= 170	CFS
OVERTOPPING ELEVATION	= 1093.0	FT

FOR -DRW1- PLAN SEE SHEET 05

8/13/2023
R:\Roadways\Projects\NCDOT\B-5833\Roadway\Proj\b5833_rdy_pf1_08.dgn
(Henry Lowery)

Docusign Envelope ID: E03116D9-9111-4A69-87F1-46AF0CF86082

5/28/99

TGS ENGINEERS
706 HILLSBOROUGH ST. SUITE 200
RALEIGH, NC 27603
PH (919) 773-8887
CORP. LICENSE NO.: C-0275

PROJECT REFERENCE NO.	SHEET NO.
B-5833	09

ROADWAY DESIGN ENGINEER
NORTH CAROLINA PROFESSIONAL SEAL 027418 ENGINEER MARCUS LOWERY
3/5/2026

HYDRAULICS ENGINEER
NORTH CAROLINA PROFESSIONAL SEAL 044158 ENGINEER BENJAMIN J. HENSCHAR
3/5/2026

DOCUMENT NOT CONSIDERED FINAL UNLESS ALL SIGNATURES COMPLETED

EXISTING GROUND
PROPOSED GRADE
LEFT DITCH GRADE
RIGHT DITCH GRADE

-RAMPD-
TO SB I-77

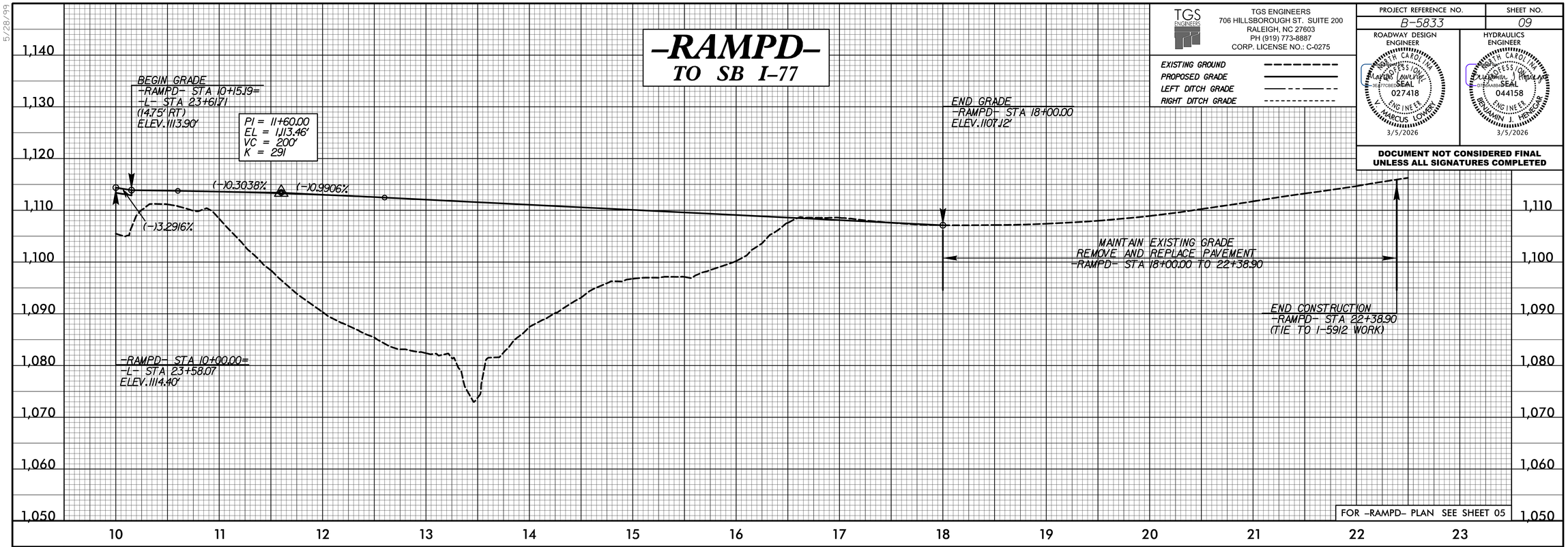

FOR -RAMPD- PLAN SEE SHEET 05

-LOOPD-
FROM SB I-77

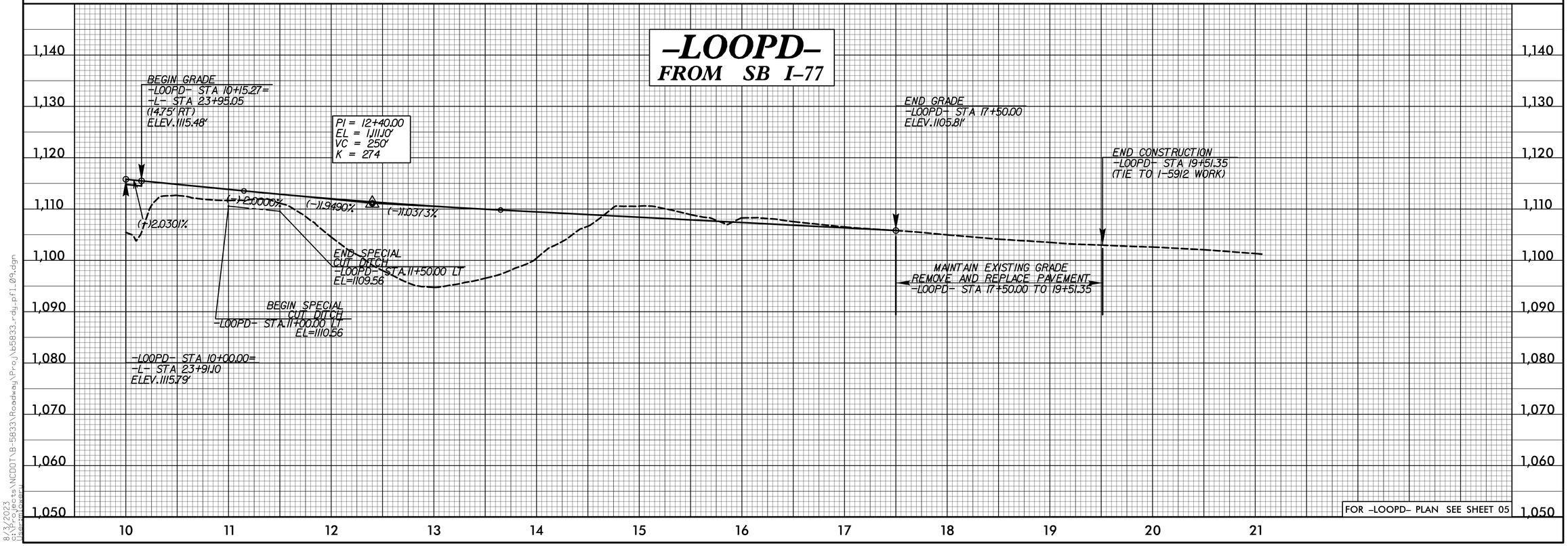

FOR -LOOPD- PLAN SEE SHEET 05

8/3/2023
R:\Roadway\Projects\NCDOT\B-5833\Roadway\Proj\b5833_rdy_pf1_09.dgn
(Benjamin Henschar)

Docusign Envelope ID: E03116D9-9111-4A69-87F1-46AF0CF86082

5/28/99

TGS ENGINEERS
706 HILLSBOROUGH ST. SUITE 200
RALEIGH, NC 27603
PH (919) 773-8887
CORP. LICENSE NO.: C-0275

PROJECT REFERENCE NO.	SHEET NO.
B-5833	10

ROADWAY DESIGN ENGINEER
NORTH CAROLINA PROFESSIONAL SEAL 027418 ENGINEER MARCUS LOWERY
DocuSigned by: Marcus Lowery
3/5/2026

HYDRAULICS ENGINEER
NORTH CAROLINA PROFESSIONAL SEAL 044158 ENGINEER BENJAMIN J. HENSCHEL
DocuSigned by: Benjamin Henschel
3/5/2026

DOCUMENT NOT CONSIDERED FINAL UNLESS ALL SIGNATURES COMPLETED

EXISTING GROUND
PROPOSED GRADE
LEFT DITCH GRADE
RIGHT DITCH GRADE

–Y3– I–77

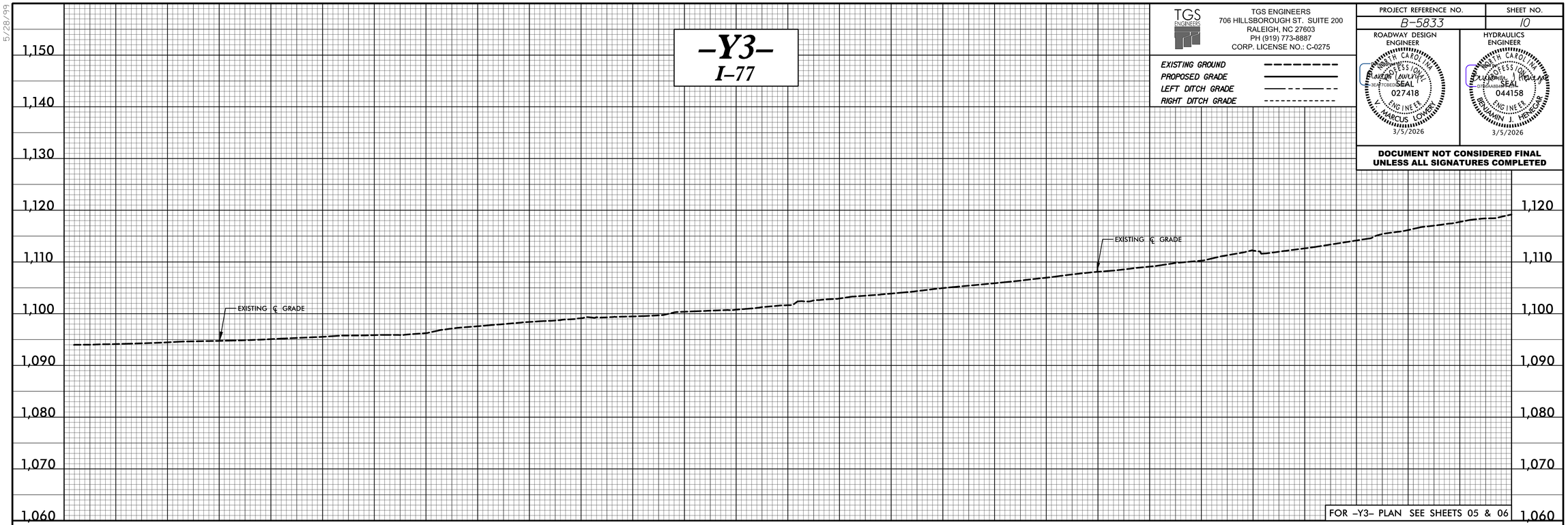

FOR –Y3– PLAN SEE SHEETS 05 & 06

–Y3– I–77

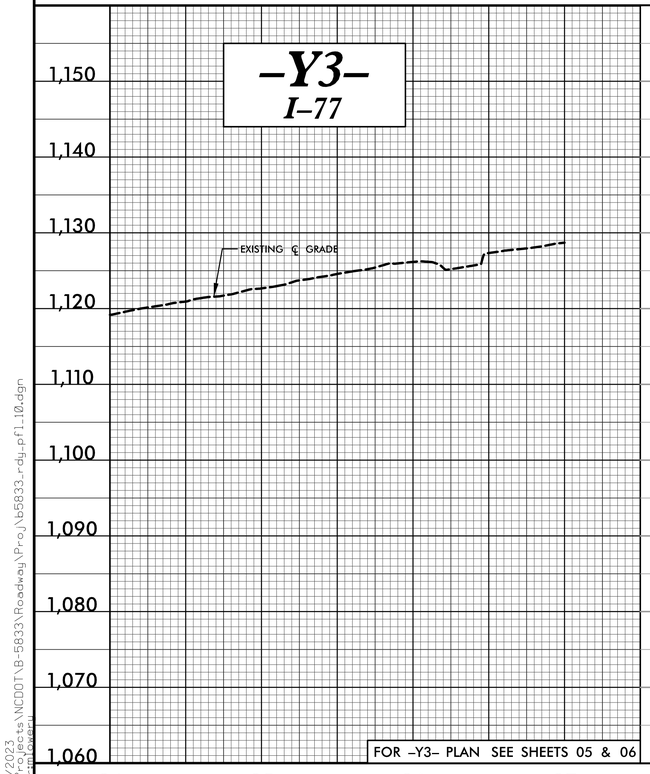

FOR –Y3– PLAN SEE SHEETS 05 & 06

–Y4– SR 1350

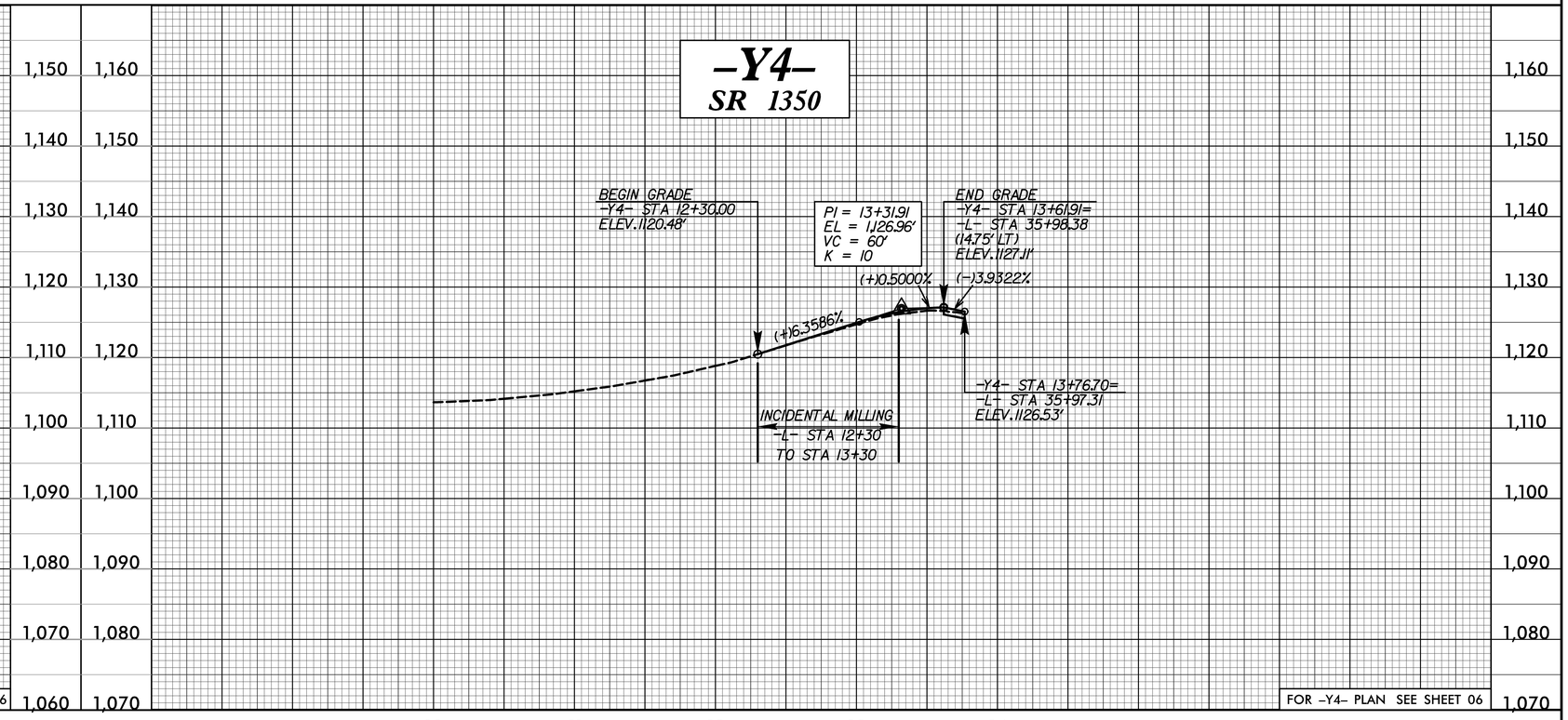

FOR –Y4– PLAN SEE SHEET 06

8/31/2023
R:\Roadway\Proj\B5833_rdy_pfl_10.dgn
(Henschel, Lowery)

Docusign Envelope ID: E03116D9-9111-4A69-87F1-46AF0CF86082

5/28/99

TGS ENGINEERS
706 HILLSBOROUGH ST. SUITE 200
RALEIGH, NC 27603
PH (919) 773-8887
CORP. LICENSE NO.: C-0275

PROJECT REFERENCE NO.	SHEET NO.
B-5833	11

ROADWAY DESIGN ENGINEER
NORTH CAROLINA PROFESSIONAL SEAL 027418 ENGINEER MARCUS LOWERY
3/5/2026

HYDRAULICS ENGINEER
NORTH CAROLINA PROFESSIONAL SEAL 044158 ENGINEER BENJAMIN J. HENSGEN
3/5/2026

DOCUMENT NOT CONSIDERED FINAL UNLESS ALL SIGNATURES COMPLETED

EXISTING GROUND
PROPOSED GRADE
LEFT DITCH GRADE
RIGHT DITCH GRADE

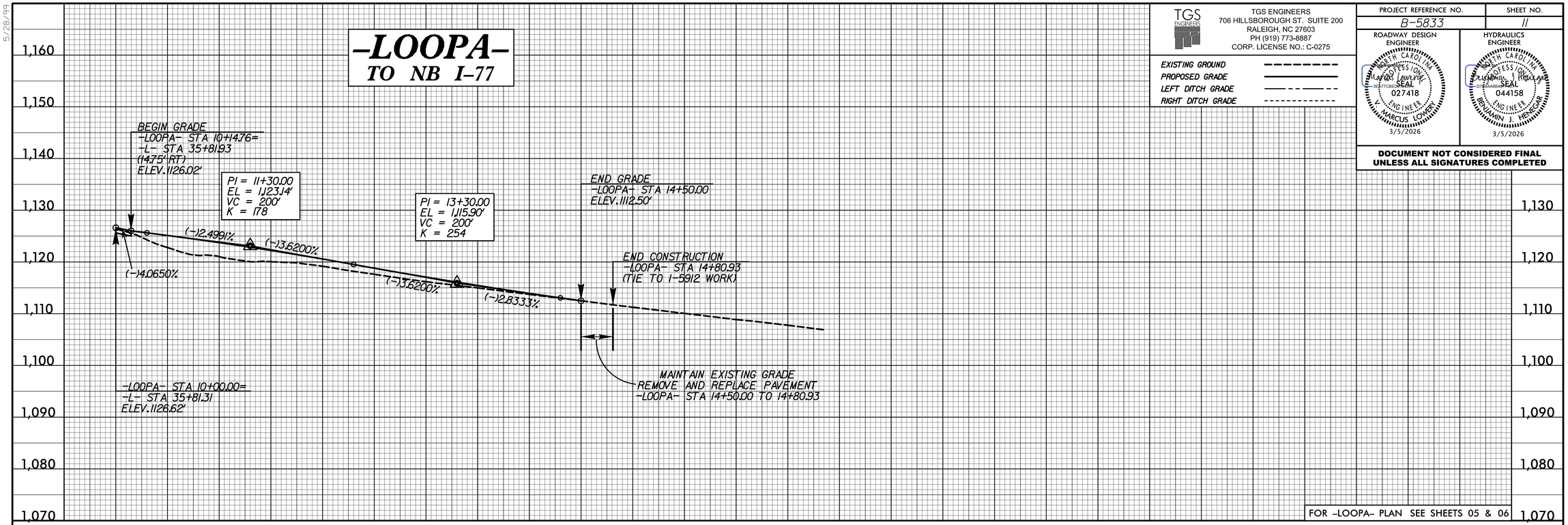

FOR -LOOPA- PLAN SEE SHEETS 05 & 06

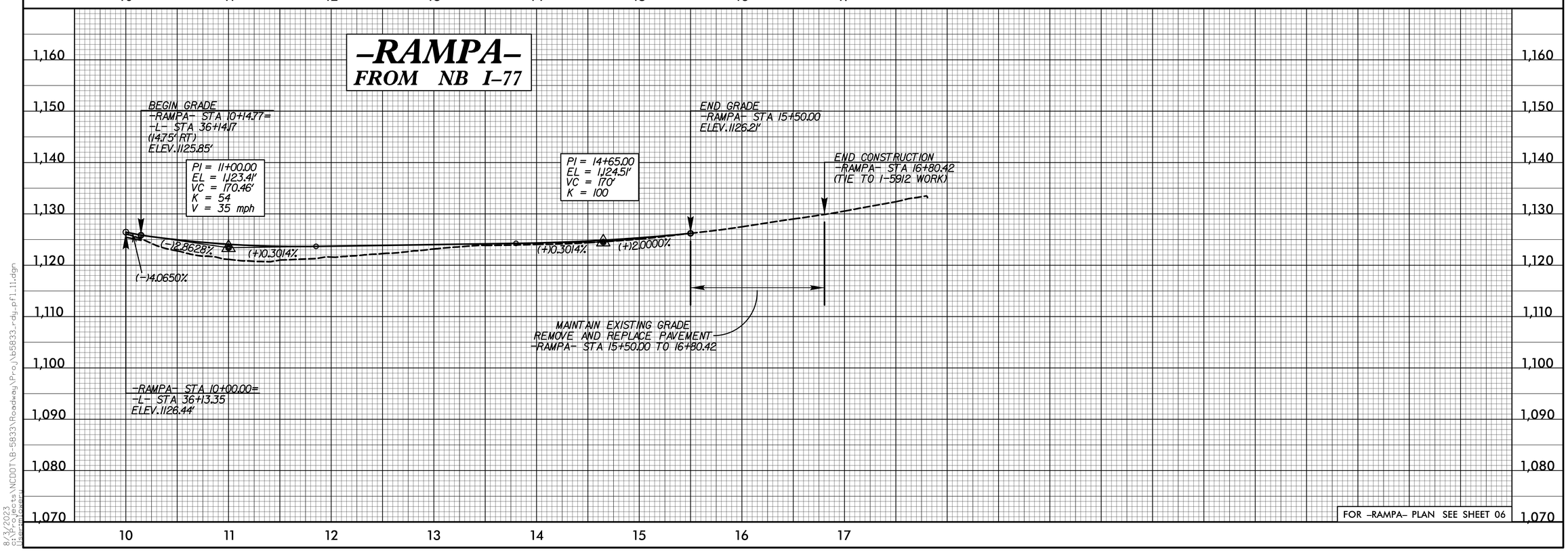

FOR -RAMPA- PLAN SEE SHEET 06

8/3/2023
R:\Roadway\Plans\NCDOT\B-5833\Roadway\Proj\b5833_rdy_pfl_11.dgn
(Hensgen, Lowery)