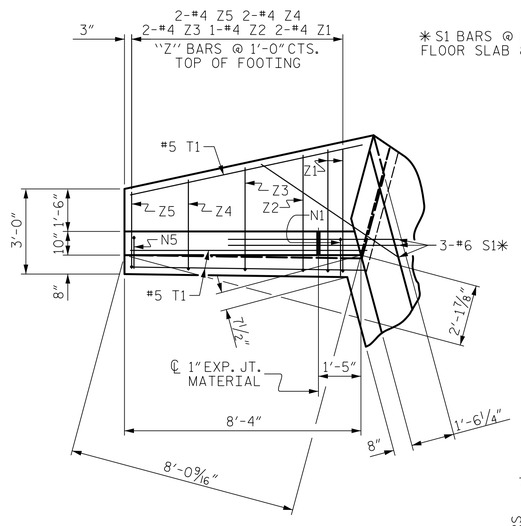

PLAN W4

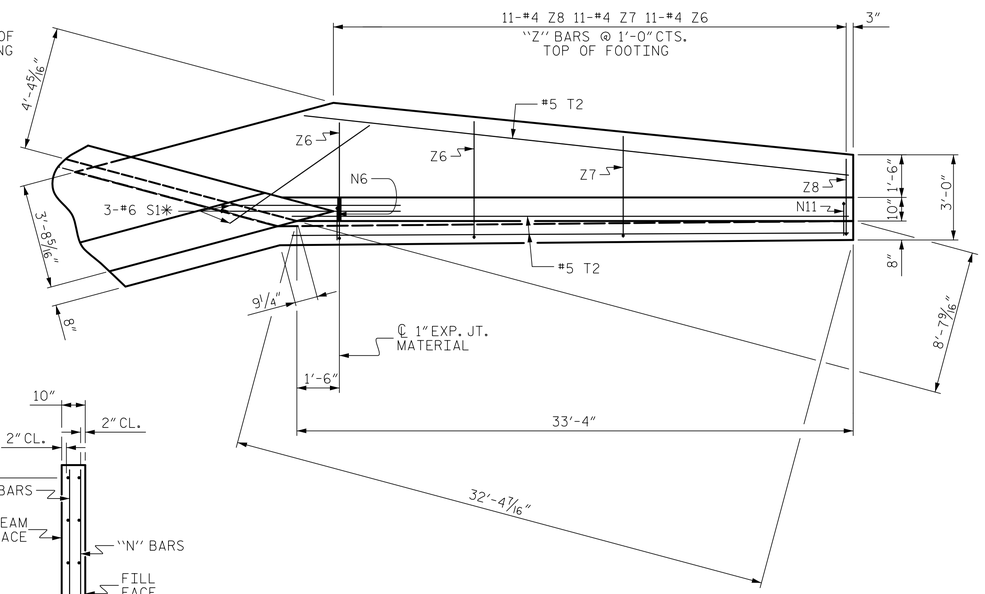

PLAN W3

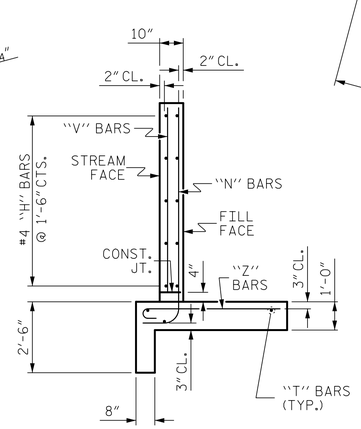

TYPICAL WING SECTION

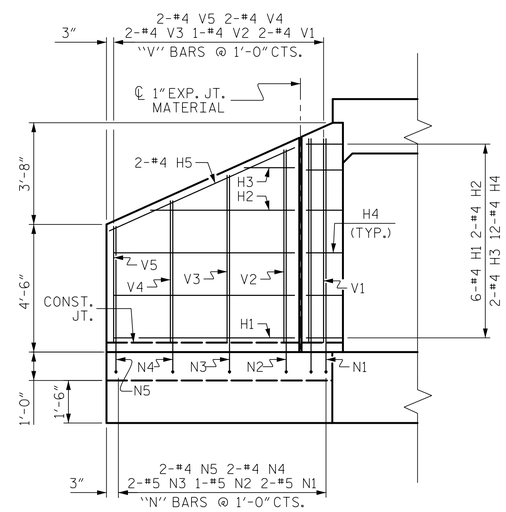

ELEVATION W4

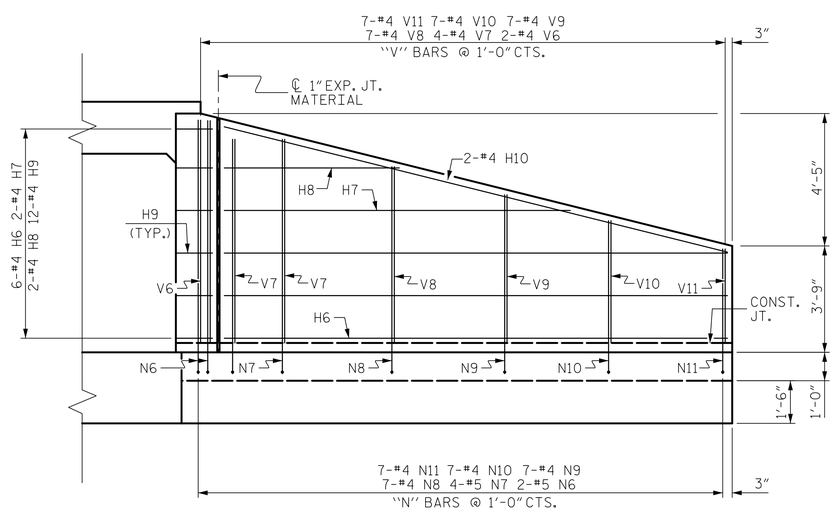

ELEVATION W3

BAR TYPES

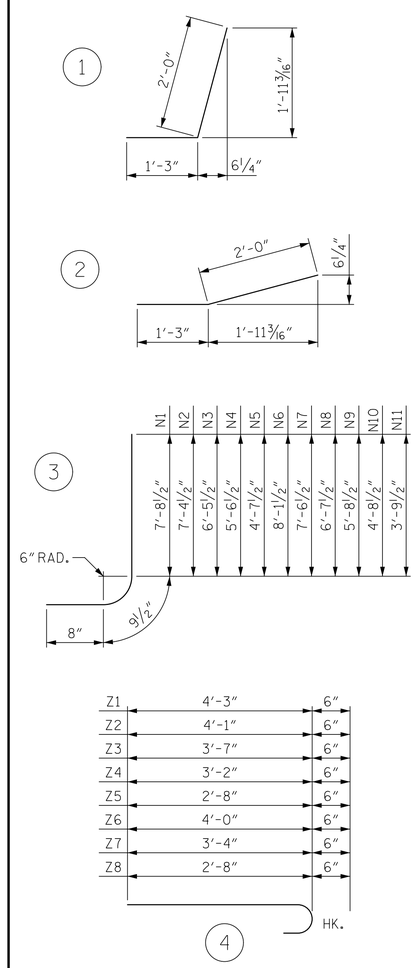

ALL BAR DIMENSIONS ARE OUT TO OUT.

BILL OF MATERIAL WINGS W3 & W4

BAR	NO.	SIZE	TYPE	LENGTH	WEIGHT
H1	6	#4	STR	6'-5"	26
H2	2	#4	STR	5'-1"	7
H3	2	#4	STR	1'-9"	2
H4	12	#4	1	3'-3"	26
H5	2	#4	STR	7'-0"	9
H6	6	#4	STR	31'-5"	126
H7	2	#4	STR	21'-0"	28
H8	2	#4	STR	9'-9"	13
H9	12	#4	2	3'-3"	26
H10	2	#4	STR	31'-8"	42
N1	2	#5	3	9'-2"	19
N2	1	#5	3	8'-10"	9
N3	2	#5	3	7'-11"	17
N4	2	#4	3	7'-0"	9
N5	2	#4	3	6'-1"	8
N6	2	#5	3	9'-7"	20
N7	4	#5	3	9'-0"	38
N8	7	#4	3	8'-1"	38
N9	7	#4	3	7'-2"	34
N10	7	#4	3	6'-2"	29
N11	7	#4	3	5'-3"	25
S1	6	#6	STR	6'-0"	54
T1	3	#5	STR	8'-4"	26
T2	3	#5	STR	33'-4"	104
V1	2	#4	STR	7'-0"	9
V2	1	#4	STR	6'-7"	4
V3	2	#4	STR	5'-10"	8
V4	2	#4	STR	4'-10"	6
V5	2	#4	STR	4'-1"	5
V6	2	#4	STR	7'-6"	10
V7	4	#4	STR	7'-0"	19
V8	7	#4	STR	6'-1"	28
V9	7	#4	STR	5'-1"	24
V10	7	#4	STR	4'-2"	19
V11	7	#4	STR	3'-3"	15
Z1	2	#4	4	4'-9"	6
Z2	1	#4	4	4'-7"	3
Z3	2	#4	4	4'-1"	5
Z4	2	#4	4	3'-8"	5
Z5	2	#4	4	3'-2"	4
Z6	12	#4	4	4'-6"	36
Z7	11	#4	4	3'-10"	28
Z8	11	#4	4	3'-2"	23

REINFORCING STEEL FOR 2 WINGS	992	LBS
CLASS A CONCRETE		
2 WINGS	16.2	CY
1 HEADWALL	0.8	CY
1 END CURTAIN WALL	0.8	CY
TOTAL	17.8	CY

NOTES

A 3 FOOT STRIP OF FILTER FABRIC SHALL BE ATTACHED TO THE FILL FACE OF THE WING COVERING THE ENTIRE LENGTH OF THE EXPANSION JOINT.

G1 BARS IN HEADWALL ARE INCLUDED WITH THE BARREL REINFORCING STEEL.

PROJECT NO. B-5833

YADKIN COUNTY

STATION: 12+93.03 -L-

SHEET 9 OF 9

NORTH CAROLINA PROFESSIONAL SEAL 20125 ENGINEER

Matthew G. Chick, Jr.

5FBCC2F3A4DC413...

11/20/2025

DOCUMENT NOT CONSIDERED FINAL UNLESS ALL SIGNATURES COMPLETED

TGS ENGINEERS
706 HILLSBOROUGH STREET
SUITE 200
RALEIGH, NC 27603
PH (919) 773-8887
CORP. LICENSE NO.: C-0275

STATE OF NORTH CAROLINA
DEPARTMENT OF TRANSPORTATION
RALEIGH

WINGS FOR CONCRETE BOX CULVERT STAGE II

30° SKEW

REVISIONS						
NO.	BY:	DATE:	NO.	BY:	DATE:	
1			3			
2			4			

SHEET NO. C-9

TOTAL SHEETS 9

DRAWN BY :	ZCS	DATE :	3/22
CHECKED BY :	MGC	DATE :	3/22
DESIGN ENGINEER OF RECORD:	ZCS	DATE :	3/22

8/4/2023
X:\NCDOT\B-5833\Structures\Final plans\DGNs\Culvert\411_017_B-5833_CU09_982099.dgn
User:ZSmith