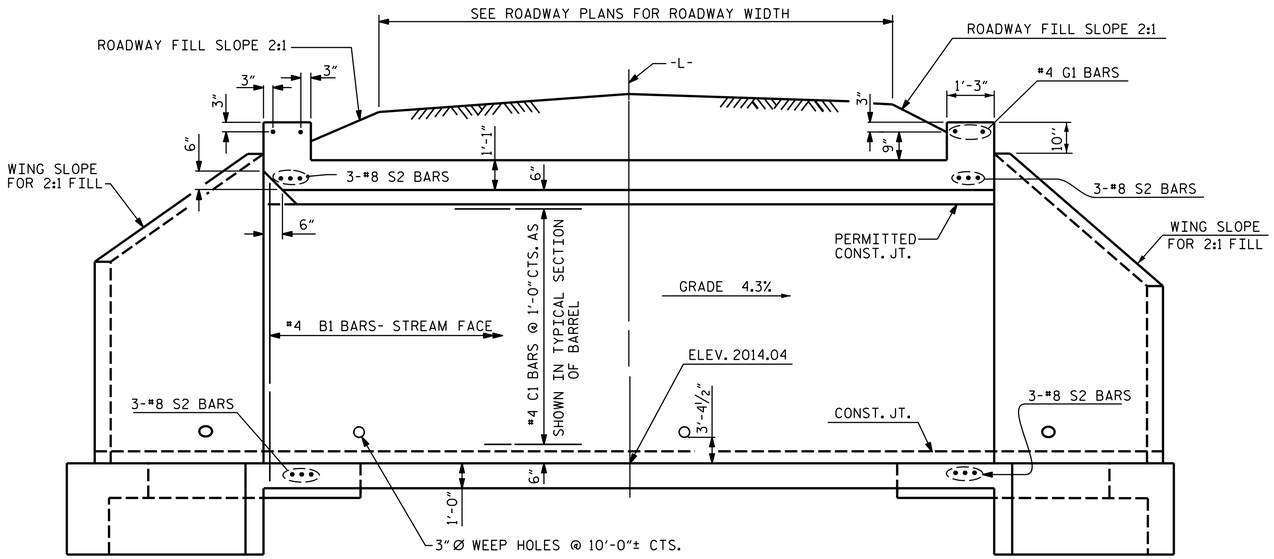

CULVERT SECTION NORMAL TO ROADWAY

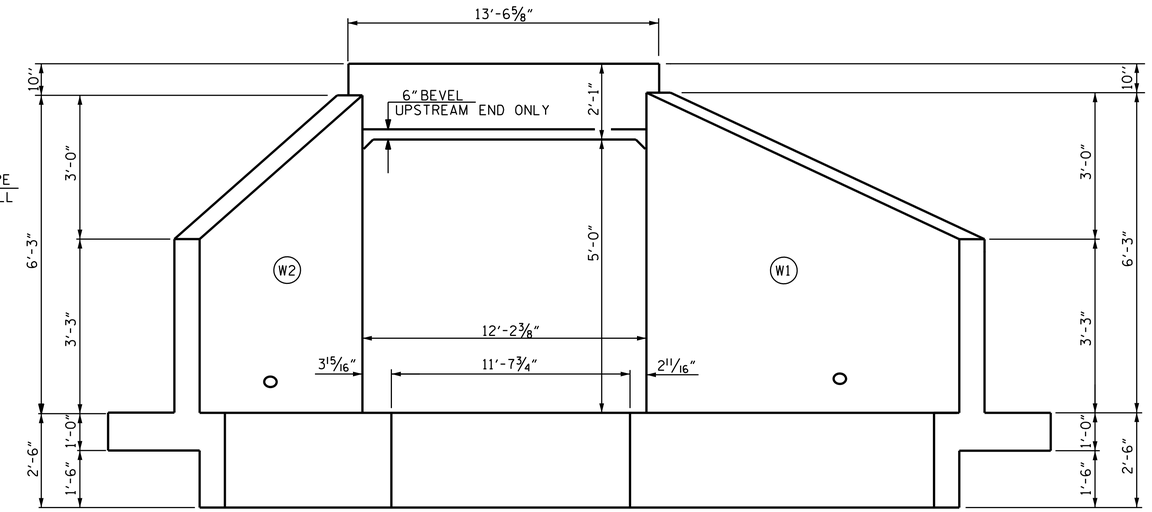

END ELEVATION NORMAL TO SKEW

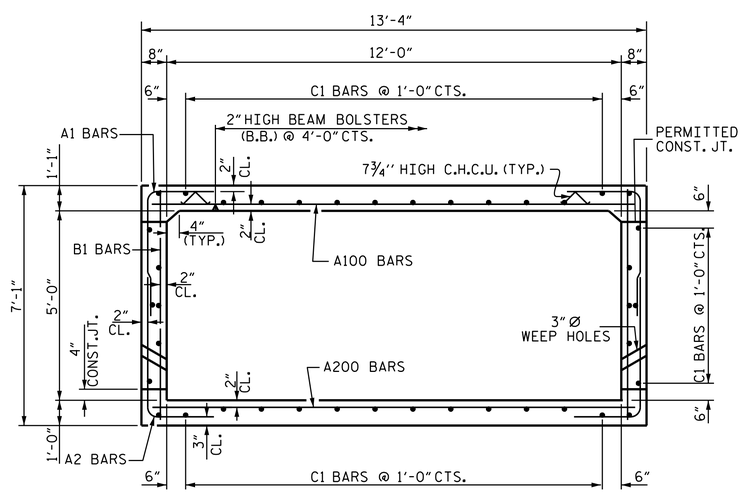

RIGHT ANGLE SECTION OF BARREL

THERE ARE 40 "C" BARS IN SECTION OF BARREL

PROJECT NO. A-0009CD

GRAHAM COUNTY

STATION: 99+82.00 -Y2-

SHEET 3 OF 6

NORTH CAROLINA PROFESSIONAL SEAL 20125 ENGINEER MARSHALL G. GRESS, JR.

Marshall G. Gress, Jr.

5FBCC2F3A4DC413...

2/18/2026

DOCUMENT NOT CONSIDERED FINAL UNLESS ALL SIGNATURES COMPLETED

TGS ENGINEERS
201 W. MARION ST STE 200
SHELBY, NC 28150
PH (704) 476-0003
CORP. LICENSE NO.: C-0275

STATE OF NORTH CAROLINA
DEPARTMENT OF TRANSPORTATION
RALEIGH

SINGLE 12 FT. X 5 FT.
CONCRETE BOX CULVERT
79°-39'-00" SKEW

REVISIONS						SHEET NO.
NO.	BY:	DATE:	NO.	BY:	DATE:	C1-3
1			3			TOTAL SHEETS
2			4			6

DRAWN BY :	ZCS	DATE :	06/21
CHECKED BY :	MGC	DATE :	10/21
DESIGN ENGINEER OF RECORD :	ZCS	DATE :	10/21

9/17/2025
X:\NCDOT\A-0009\Structures\A-0009CD\STR. #1 99+82.00 -Y2-\Final Plans\DGNs\411_005_A-0009CD_SMU_CU03.dgn
User:ZSmith

STR. #1