STATE OF NORTH CAROLINA
DEPT. OF TRANSPORTATION
DIVISION OF HIGHWAYS
RALEIGH, N.C.

ENGLISH DETAIL DRAWING FOR
MINIMUM DEPTH
CONCRETE CATCH BASIN
12" THRU 84" PIPE

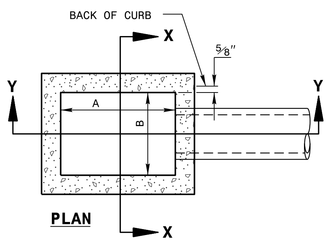

PLAN

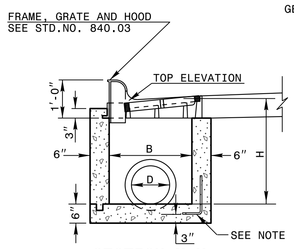

SECTION X-X

GENERAL NOTES:

USE CLASS "B" CONCRETE THROUGHOUT.

PROVIDE ALL CATCH BASINS OVER 3'-6" IN DEPTH WITH STEPS 12" ON CENTER. USE STEPS WHICH COMPLY WITH STD. DRAWING 840.66.

OPTIONAL CONSTRUCTION - MONOLITHIC POUR, 2" KEYWAY, OR #4 BAR DOWELS AT 12" CENTERS AS DIRECTED BY THE ENGINEER.

USE FORMS FOR THE CONSTRUCTION OF THE BOTTOM SLAB.

IF REINFORCED CONCRETE PIPE IS SET IN BOTTOM SLAB OF BOX, ADD TO SLAB AS SHOWN ON STD. NO. 840.00.

USE TYPE "E", "F" AND "G" GRATES UNLESS OTHERWISE INDICATED.

FOR 8'-0" IN HEIGHT OR LESS USE 6" WALLS AND BOTTOM SLAB. OVER 8'-0" TO 16'-0" IN HEIGHT USE 8" WALLS AND BOTTOM SLAB. ADJUST QUANTITIES ACCORDINGLY.

CONSTRUCT WITH PIPE CROWNS MATCHING.

CHAMFER ALL EXPOSED CORNERS 1".

** FOR STRUCTURES WITH PIPE LARGER THAN 54", MAKE THE TOP SLAB 8" THICK.

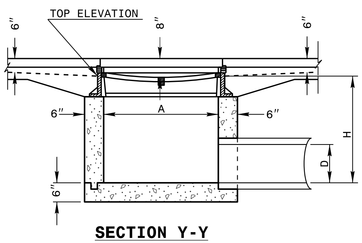

SECTION Y-Y

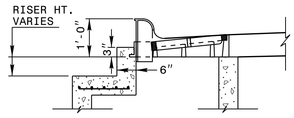

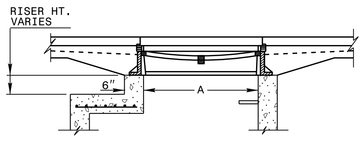

DETAIL SHOWING METHOD OF RISER CONSTRUCTION

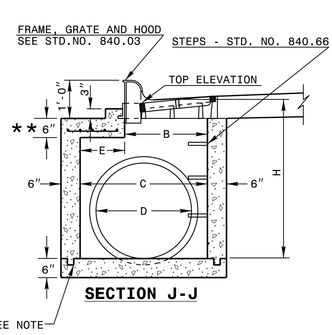

SECTION J-J

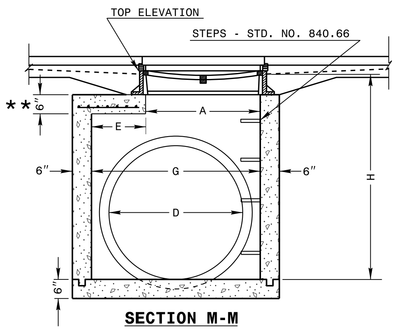

SECTION M-M

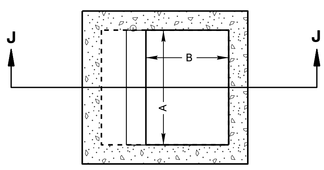

PLAN

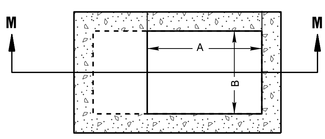

PLAN

SHEET 1 OF 2
840D02

STATE OF NORTH CAROLINA
DEPT. OF TRANSPORTATION
DIVISION OF HIGHWAYS
RALEIGH, N.C.

ENGLISH DETAIL DRAWING FOR
MINIMUM DEPTH
CONCRETE CATCH BASIN
12" THRU 84" PIPE

** FOR STRUCTURES WITH PIPE LARGER THAN 54", MAKE THE TOP SLAB 8" THICK.

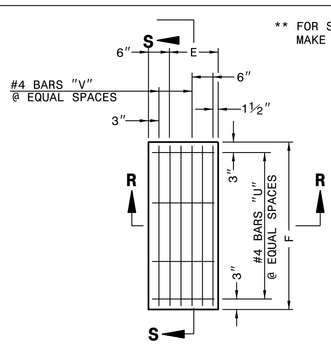

PLAN OF TOP SLAB

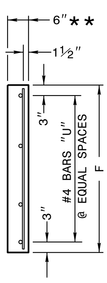

SECTION S-S

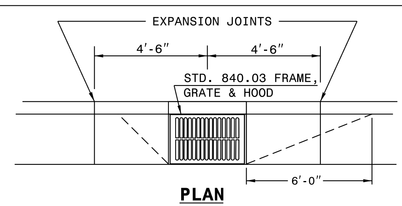

PLAN

CURB AND GUTTER WITH CATCH BASIN ON STEEP GRADES

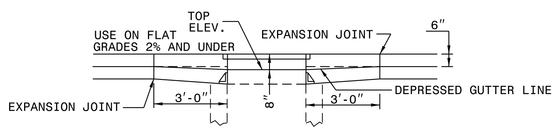

ELEVATION

NORMAL CURB AND GUTTER ON LIGHT GRADES

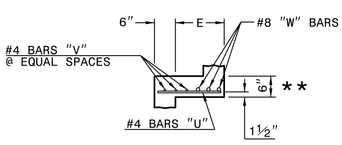

SECTION R-R

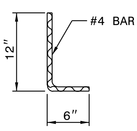

DOWEL

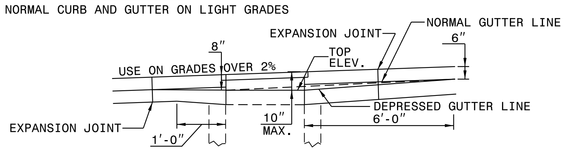

ELEVATION

NORMAL CURB AND GUTTER ON STEEP GRADES

* RISER HAS .228 CUBIC YARDS OF CONCRETE PER FOOT HEIGHT

MINIMUM DIMENSIONS AND QUANTITIES FOR CONCRETE CATCH BASIN(BASED ON MIN. HEIGHT, H, WITH NO RISER) *

DIMENSIONS OF BOX AND PIPE						COVER DIMENSION		BARS-U		BARS-V		BARS-W			CU.YDS. CONC. IN BOX			DEDUCTIONS ONE PIPE	
PIPE	SPAN	WIDTH	WIDTH	SPAN	MIN. HEIGHT									TOTAL LBS.	TOP SLAB	BOTTOM SLAB	TOT. CONC. FOR MINIMUM HEIGHT, H		
D	A	B	C	G	H	E	F	NO.	LENGTH	NO.	LENGTH	NO.	LENGTH					C.M.	R.C.
12"	3'-0"	2'-2"	--	--	2'-0"	--	--	--	--	--	--	--	--	--	--	0.235	0.772	0.015	0.026
15"	3'-0"	2'-2"			2'-3"											0.235	0.829	0.023	0.036
18"	3'-0"	2'-2"			2'-6"											0.235	0.887	0.033	0.049
24"	3'-0"	2'-2"			3'-1"											0.235	1.001	0.059	0.085
30"	3'-0"	2'-2"	3'-4"	3'-4"	3'-10"	1'-2"	4'-4"	4	1'-5"	2	4'-1"	3	4'-1"	39	0.123	0.347	1.433	0.092	0.127
36"	3'-0"	2'-2"	3'-10"	3'-10"	4'-6"	1'-8"	4'-10"	4	1'-11"	3	4'-7"	3	4'-7"	43	0.161	0.432	1.714	0.132	0.178
42"	3'-0"	2'-2"	4'-5"	4'-5"	4'-11"	2'-2"	5'-5"	5	2'-5"	4	5'-2"	3	5'-2"	47	0.200	0.543	1.738	0.180	0.243
48"	3'-0"	2'-2"	5'-0"	5'-0"	5'-6"	2'-10"	6'-0"	5	3'-1"	4	5'-9"	3	5'-9"	51	0.235	0.667	2.052	0.235	0.317
54"	3'-0"	2'-2"	5'-7"	5'-7"	6'-0"	3'-5"	6'-7"	6	3'-8"	5	6'-4"	3	6'-4"	56	0.289	0.802	2.387	0.297	0.401
60"	3'-0"	2'-2"	6'-3"	6'-3"	6'-6"	4'-1"	7'-3"	6	4'-4"	5	7'-0"	3	7'-0"	61	0.340	0.973	2.722	0.363	0.546
66"	3'-0"	2'-2"	6'-11"	6'-11"	7'-0"	4'-9"	7'-11"	7	5'-0"	6	7'-8"	3	7'-8"	66	0.391	1.160	3.057	0.440	0.655
72"	3'-0"	2'-2"	7'-6"	7'-6"	7'-6"	5'-3"	8'-6"	7	5'-6"	6	8'-3"	3	8'-3"	72	0.442	1.340	3.392	0.524	0.774
78"	3'-0"	2'-2"	8'-1"	8'-1"	8'-0"	5'-11"	9'-1"	8	6'-2"	7	8'-10"	3	8'-10"	78	0.493	1.530	3.727	0.615	0.893
84"	3'-0"	2'-2"	8'-9"	8'-9"	8'-6"	6'-7"	9'-9"	8	6'-10"	7	9'-6"	3	9'-6"	84	0.544	1.760	4.062	0.713	1.010

SHEET 2 OF 2
840D02

STATE OF NORTH CAROLINA
DEPT. OF TRANSPORTATION
DIVISION OF HIGHWAYS
RALEIGH, N.C.

ENGLISH DETAIL DRAWING FOR
MINIMUM DEPTH
CONCRETE CATCH BASIN
12" THRU 84" PIPE

CONTRACT STANDARDS AND DEVELOPMENT UNIT
Office 919-707-6950 FAX 919-250-4119

SEE PLATE FOR TITLE

ORIGINAL BY: 2002 Std.840.01 DATE:
MODIFIED BY: E.E. WARD DATE: 3-1-02
CHECKED BY: DATE:
FILE SPEC.: s:Special Details/jhowerton/840d02.dgn

DOCUMENT NOT CONSIDERED FINAL UNLESS ALL SIGNATURES COMPLETED

NORTH CAROLINA PROFESSIONAL SEAL ENGINEER 33144 03/04/2026

PROJECT REFERENCE NO. BR-0168
SHEET NO. 2C-6