Docusign Envelope ID: C876013F-E4B9-488C-8F49-C62B1FC74525

Prepared in the Office of:

AECOM

AECOM TECHNICAL SERVICES OF NORTH CAROLINA, INC.
5438 WADE PARK BLVD, SUITE 200, RALEIGH, NC 27607
919-461-1100
F - 0342

DOCUMENT NOT CONSIDERED FINAL UNLESS ALL SIGNATURES COMPLETED

PROJECT REFERENCE NO.	SHEET NO.
U-5302	UC-3E

DESIGNED BY: KKPT
DRAWN BY: ZS
CHECKED BY:
APPROVED BY: SDS
REVISED: CRC

NORTH CAROLINA DEPARTMENT OF TRANSPORTATION

UTILITIES ENGINEERING SEC.
PHONE:(919)707-6690
FAX:(919)250-4151

NORTH CAROLINA PROFESSIONAL SEAL 058684 ENGINEER CATHERINE R. CANGEMI

Signed by: Catherine R. Cangemi
7B8D2BE6EBAB415...
1/19/2026

UTILITY CONSTRUCTION

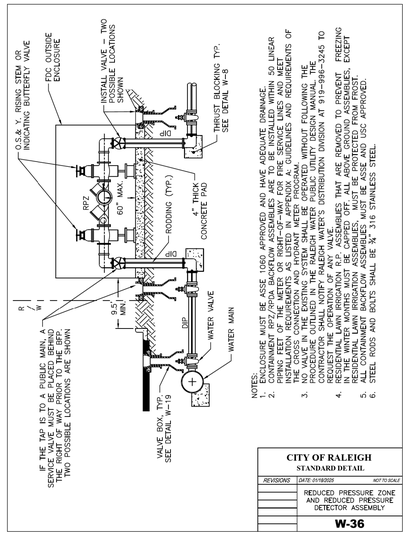

NOTES:
1. ENCLOSURE MUST BE ASSE 1060 APPROVED AND HAVE ADEQUATE DRAINAGE.
2. CONTAINMENT RPZ/RPDA BACKFLOW ASSEMBLIES ARE TO BE INSTALLED WITHIN 50 LINEAR PIPING FEET OF THE METER OR RIGHT-OF-WAY FOR FIRE SERVICE LINES AND MEET INSTALLATION REQUIREMENTS AS LISTED IN APPENDIX A: GUIDELINES AND REQUIREMENTS OF THE CROSS CONNECTION AND HYDRANT METER PROGRAM.
3. NO VALVE IN THE EXISTING SYSTEM SHALL BE OPERATED WITHOUT FOLLOWING THE PROCEDURE OUTLINED IN THE RALEIGH WATER PUBLIC UTILITY DESIGN MANUAL. THE CONTRACTOR SHALL NOTIFY RALEIGH WATER'S DISTRIBUTION DIVISION AT 919-996-3245 TO REQUEST THE OPERATION OF ANY VALVE.
4. RESIDENTIAL LAWN IRRIGATION R.P. ASSEMBLIES THAT ARE REMOVED TO PREVENT FREEZING DAMAGE DURING THE WINTER MONTHS MUST BE CLOSED OUT AS LARGE CROSS ASSEMBLIES, EXCEPT RESIDENTIAL LAWN IRRIGATION ASSEMBLIES, MUST BE PROTECTED FROM FROST.
5. ALL CONTAINMENT BACKFLOW ASSEMBLIES MUST BE ASSE AND USC APPROVED.
6. STEEL RODS AND BOLTS SHALL BE ¾" 316 STAINLESS STEEL.

CITY OF RALEIGH
STANDARD DETAIL

REVISIONS	DATE: 01/19/2020	NOT TO SCALE
	REDUCED PRESSURE ZONE AND REDUCED PRESSURE DETECTOR ASSEMBLY	
	W-36	

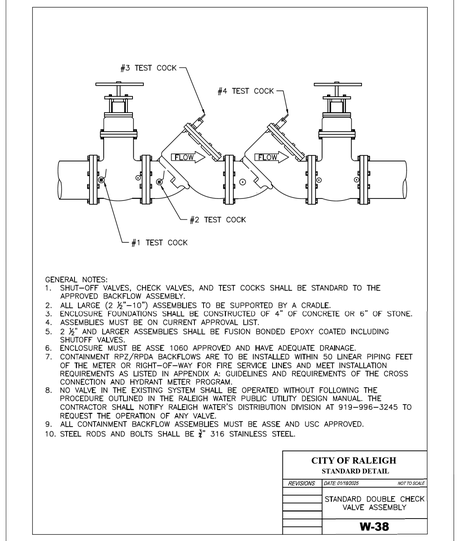

GENERAL NOTES:
1. SHUT-OFF VALVES, CHECK VALVES, AND TEST COCKS SHALL BE STANDARD TO THE APPROVED BACKFLOW ASSEMBLY.
2. ALL LARGE (2 ½"–10") ASSEMBLIES TO BE SUPPORTED BY A CRADLE.
3. ENCLOSURE FOUNDATIONS SHALL BE CONSTRUCTED OF 4" OF CONCRETE OR 6" OF STONE.
4. ASSEMBLIES MUST BE ON CURRENT APPROVAL LIST.
5. 2 ½" AND LARGER ASSEMBLIES SHALL BE FUSION BONDED EPOXY COATED INCLUDING SHUTOFF VALVES.
6. ENCLOSURE MUST BE ASSE 1060 APPROVED AND HAVE ADEQUATE DRAINAGE.
7. CONTAINMENT RPZ/RPDA BACKFLOWS ARE TO BE INSTALLED WITHIN 50 LINEAR PIPING FEET OF THE METER OR RIGHT-OF-WAY FOR FIRE SERVICE LINES AND MEET INSTALLATION REQUIREMENTS AS LISTED IN APPENDIX A: GUIDELINES AND REQUIREMENTS OF THE CROSS CONNECTION AND HYDRANT METER PROGRAM.
8. NO VALVE IN THE EXISTING SYSTEM SHALL BE OPERATED WITHOUT FOLLOWING THE PROCEDURE OUTLINED IN THE RALEIGH WATER PUBLIC UTILITY DESIGN MANUAL. THE CONTRACTOR SHALL NOTIFY RALEIGH WATER'S DISTRIBUTION DIVISION AT 919-996-3245 TO REQUEST THE OPERATION OF ANY VALVE.
9. ALL CONTAINMENT BACKFLOW ASSEMBLIES MUST BE ASSE AND USC APPROVED.
10. STEEL RODS AND BOLTS SHALL BE ¾" 316 STAINLESS STEEL.

CITY OF RALEIGH
STANDARD DETAIL

REVISIONS	DATE: 01/19/2020	NOT TO SCALE
	STANDARD DOUBLE CHECK VALVE ASSEMBLY	
	W-38	

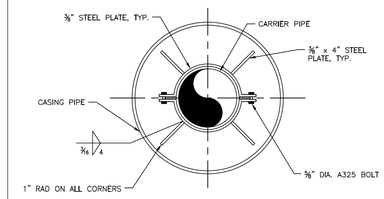

NOTE:
USE A MINIMUM OF TWO SPIDERS PER PIPE JOINT ONE FOURTH OF THE PIPE JOINT LENGTH IN FROM BOTH THE BELL AND SPIGOT ENDS.

CITY OF RALEIGH
STANDARD DETAIL

REVISIONS	DATE: 01/19/2020	NOT TO SCALE
	PIPE ALIGNMENT GUIDE	
	W-40	

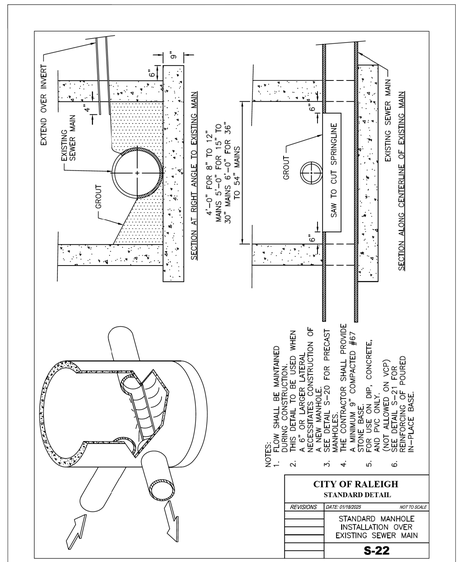

NOTES:
1. FLOW SHALL BE MAINTAINED THROUGH THE MANHOLE WHEN A 6" OR LARGER LATERAL IS BEING CONSTRUCTED OF A NEW MANHOLE.
2. USE DETAIL S-20 FOR PRECAST STONE BASE.
3. A MINIMUM 4" COMPACTED #67 STONE BASE.
4. THE CONTRACTOR SHALL PROVIDE AND PUT ON UP, CONCRETE, AND PUT ON HCP) (NOT ALLOWED ON HCP) USE DETAIL S-21 FOR REINFORCING OF POURED IN-PLACE BASE.

CITY OF RALEIGH
STANDARD DETAIL

REVISIONS	DATE: 01/19/2020	NOT TO SCALE
	STANDARD MANHOLE INSTALLATION OVER EXISTING SEWER MAIN	
	S-22	

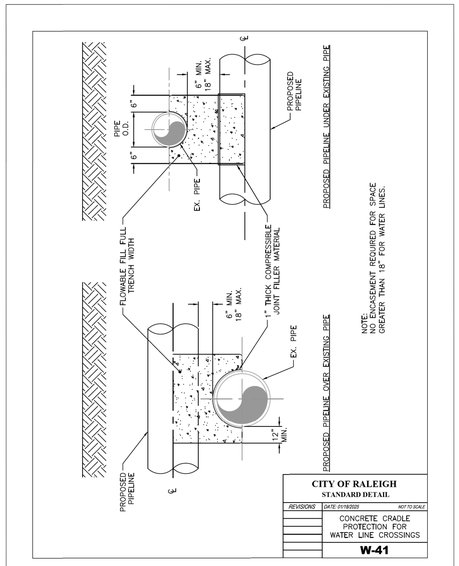

CITY OF RALEIGH
STANDARD DETAIL

REVISIONS	DATE: 01/19/2020	NOT TO SCALE
	CONCRETE CRADLE PROTECTION FOR WATER LINE CROSSINGS	
	W-41	

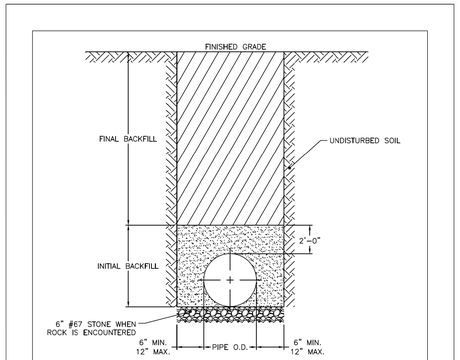

NOTES:
1. FOR TRENCHES REQUIRING SHORING AND BRACING, DIMENSIONS SHALL BE TAKEN FROM THE INSIDE FACE OF THE SHORING AND BRACING.
2. NO ROCKS OR BOULDERS 4" OR LARGER TO BE USED IN INITIAL BACKFILL.
3. ALL BACKFILL MATERIAL SHALL BE SUITABLE NATIVE MATERIAL.
4. BACKFILL SHALL BE TAMPED IN 6" LIFTS IN TRAFFIC AREAS, 12" IN NON-TRAFFIC AREAS.
5. ACHIEVE 80% COMPACTION IN NON-TRAFFIC AREAS, AND 95% COMPACTION IN TRAFFIC AREAS.
6. IF IN EASEMENT, 4" TOPSOIL AND 12" CLEAN SELECT FILL MAY BE REQUIRED.
7. NO BOULDERS 8" IN DIAMETER OR GREATER ALLOWED IN FINAL BACKFILL.

CITY OF RALEIGH
STANDARD DETAIL

REVISIONS	DATE: 01/19/2020	NOT TO SCALE
	TRENCH BOTTOM DIMENSIONS & BACKFILLING REQUIREMENTS FOR DUCTILE IRON	
	S-4	

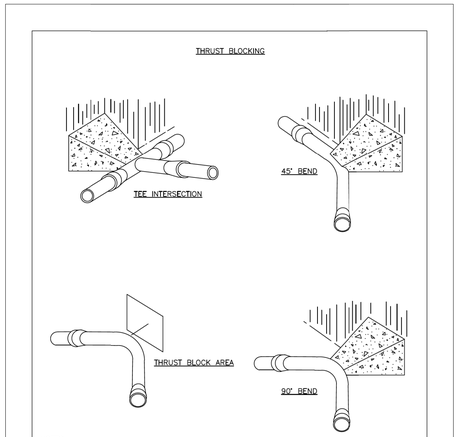

NOTES:
1. CONCRETE SHALL BE 3,000 PSI.
2. CONCRETE SHALL NOT CONTACT BOLTS OR ENDS OF MECHANICAL JOINT FITTINGS.
3. TRENCHES SHALL CONFORM TO DETAIL S-4 & S-5.
4. SEE DETAIL W-10 & W-11 (THRUST BLOCK TABLES) FOR AREA OF CONCRETE REQUIRED.
5. ALL BENDS AND INTERSECTIONS SHALL HAVE CONCRETE THRUST BLOCKING.

CITY OF RALEIGH
STANDARD DETAIL

REVISIONS	DATE: 01/19/2020	NOT TO SCALE
	THRUST BLOCKING VIEWS	
	S-7	

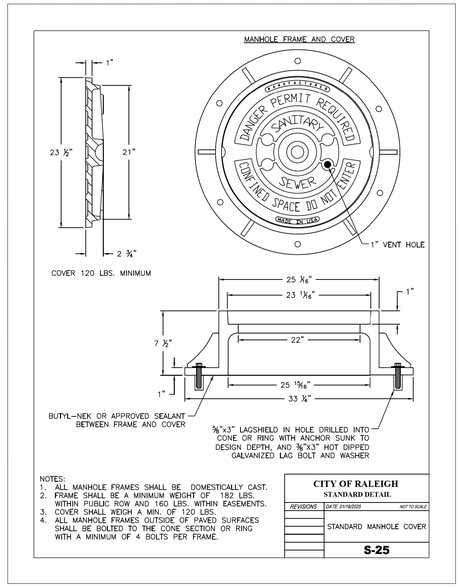

NOTES:
1. ALL MANHOLE FRAMES SHALL BE DOMESTICALLY CAST.
2. FRAME SHALL BE A MINIMUM WEIGHT OF 182 LBS. WITHIN PUBLIC ROW AND 160 LBS. WITHIN EASEMENTS.
3. COVER SHALL WEIGH A MIN. OF 120 LBS.
4. ALL MANHOLE FRAMES OUTSIDE OF PAVED SURFACES SHALL BE BOLTED TO THE CONE SECTION OR RING WITH A MINIMUM OF 4 BOLTS PER FRAME.

CITY OF RALEIGH
STANDARD DETAIL

REVISIONS	DATE: 01/19/2020	NOT TO SCALE
	STANDARD MANHOLE COVER	
	S-25	

DATE: 01/14/2025
TIME: 2:46:09 PM
DGN: c:\pwworking\usnc\adms07\396\u5302_uc_pch_3E.dgn