Docusign Envelope ID: C876013F-E4B9-488C-8F49-C62B1FC74525

Prepared In the Office of:

AECOM

AECOM TECHNICAL SERVICES OF NORTH CAROLINA, INC.
5438 WADE PARK BLVD, SUITE 200, RALEIGH, NC 27607
919-461-1100
F - 0342

PROJECT REFERENCE NO.	SHEET NO.
U–5302	UC–3C

DESIGNED BY: KKPT
DRAWN BY: ZS
CHECKED BY:
APPROVED BY: SDS
REVISED: CRC

NORTH CAROLINA DEPARTMENT OF TRANSPORTATION
UTILITIES ENGINEERING SEC.
PHONE:(919)707-6690
FAX:(919)250-4151

NORTH CAROLINA PROFESSIONAL SEAL 058684 ENGINEER CATHERINE R. CANGEMI
Signed by: Catherine R Cangemi 1/19/2026
7B8026F6E6A6415...

DOCUMENT NOT CONSIDERED FINAL UNLESS ALL SIGNATURES COMPLETED

UTILITY CONSTRUCTION

THRUST BLOCKING

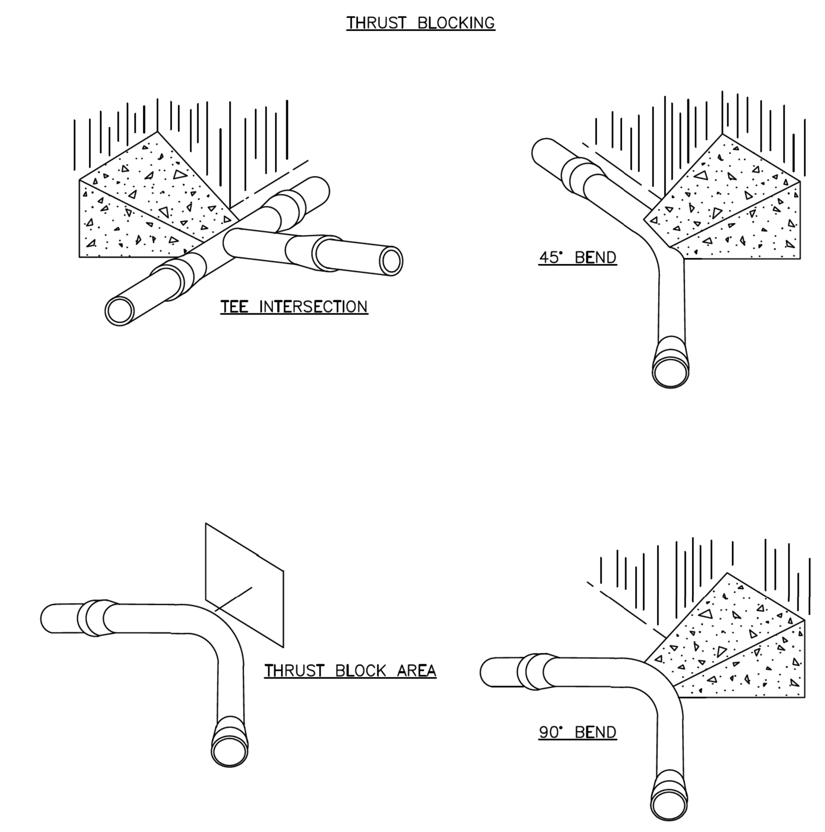

NOTES:
1. CONCRETE SHALL BE 3,000 PSI.
2. CONCRETE SHALL NOT CONTACT BOLTS OR ENDS OF MECHANICAL JOINT FITTINGS.
3. TRENCHES SHALL CONFORM TO DETAIL W–3.
4. SEE DETAIL W–10 & W–11 (THRUST BLOCK TABLES) FOR AREA OF CONCRETE REQUIRED.
5. ALL BENDS AND INTERSECTIONS SHALL HAVE CONCRETE THRUST BLOCKING.

CITY OF RALEIGH STANDARD DETAIL
REVISIONS | DATE: 01/18/2025 | NOT TO SCALE
THRUST BLOCKING VIEWS
W-9

REACTION BEARING AREAS FOR HORIZONTAL WATER PIPE BENDS BASED ON TEST PRESSURE OF 200 PSI
ALL AREAS GIVEN IN SQUARE FEET

SIZE OF BEND	DEGREE OF BEND	STATIC THRUST IN POUNDS	MODERATELY DRY CLAY 4,000 LBS/FT²	SOFT CLAY 2,000 LBS/FT²	1,600 LBS/FT² GRAVEL/ COARSE SAND	8,000 LBS/FT² DRY CLAY (ALWAYS DRY)	SAND, COMPACT FIRM 8,000 LBS/FT²	SAND–CLEAN DRY 4,000 LBS/FT²	SOIL 1,000 LBS/FT² QUICKSAND (VERY POOR)	ROCK–POOR 10,000 LBS/FT²
6"	11 ¼°	1,108	1	1	1	1	1	1	2	1
	22 ½°	2,207	1	2	2	1	1	1	3	1
	45°	4,328	2	3	3	1	1	2	5	1
	90°	7,996	2	4	5	1	1	2	8	1
	PLUG	5,655	2	3	4	1	1	2	6	1
8"	11 ¼°	1,970	1	1	2	1	1	1	2	1
	22 ½°	3,922	1	2	3	1	1	1	4	1
	45°	7,694	2	4	5	1	1	2	8	1
	90°	14,215	4	8	9	2	2	4	15	2
	PLUG	10,053	3	5	6	2	2	3	10	1
12"	11 ¼°	4,433	2	3	3	1	1	2	5	1
	22 ½°	8,826	3	5	6	2	2	3	9	1
	45°	17,312	5	9	11	3	3	5	18	2
	90°	31,983	8	16	19	4	4	8	32	4
	PLUG	22,619	6	12	14	3	3	6	23	3
16"	11 ¼°	7,881	2	4	5	1	1	2	8	1
	22 ½°	15,691	4	8	10	2	2	4	16	2
	45°	30,779	8	16	19	4	4	8	31	4
	90°	56,861	15	29	35	8	8	15	57	6
	PLUG	40,213	10	21	25	5	5	10	41	5

NOTES:
1. REACTION BEARING AREAS ARE IN SQUARE FEET MEASURED IN A VERTICAL PLANE IN THE TRENCH SIDE AT AN ANGLE OF 90° TO THE THRUST VECTOR.
2. USE 6" 90° BEND VALUE FOR HYDRANTS FOR ADDITIONAL SAFETY FACTOR.

CITY OF RALEIGH STANDARD DETAIL
REVISIONS | DATE: 01/18/2025 | NOT TO SCALE
THRUST BLOCKING DESIGN QUANTITY TABLE
W-10

REACTION BEARING AREAS FOR HORIZONTAL WATER PIPE BENDS BASED ON TEST PRESSURE OF 200 PSI
ALL AREAS GIVEN IN SQUARE FEET

SIZE OF BEND	DEGREE OF BEND	STATIC THRUST IN POUNDS	MODERATELY DRY CLAY 4,000 LBS/FT²	SOFT CLAY 2,000 LBS/FT²	1,600 LBS/FT² GRAVE/ COARSE SAND	8,000 LBS/FT² DRY CLAY (ALWAYS DRY)	SAND, COMPACT FIRM 8,000 LBS/FT²	SAND–CLEAN DRY 4,000 LBS/FT²	SOIL 1,000 LBS/FT² QUICKSAND (VERY POOR)	ROCK–POOR 10,000 LBS/FT²
24"	11 ¼°	17,734	5	9	11	3	3	5	18	2
	22 ½°	35,305	9	18	22	5	5	9	36	4
	45°	69,252	18	35	42	9	9	18	70	7
	90°	127,936	32	64	77	16	16	32	128	113
	PLUG	90,478	23	46	55	12	12	23	91	10
30"	11 ¼°	27,709	7	14	17	4	4	7	2	3
	22 ½°	55,163	14	28	34	7	7	14	56	6
	45°	108,206	28	55	65	14	14	28	109	11
	90°	199,900	50	100	120	25	25	50	200	20
	PLUG	141,372	36	71	85	18	18	36	142	15
36"	11 ¼°	39,901	10	20	24	5	5	10	40	4
	22 ½°	79,439	20	40	48	10	10	20	30	8
	45°	155,816	39	78	94	20	20	39	156	16
	90°	287,855	72	144	172	36	36	72	288	29
	PLUG	203,575	51	102	122	26	26	51	204	21
48"	11 ¼°	70,935	18	36	43	9	9	18	71	8
	22 ½°	141,218	36	71	85	18	18	36	142	15
	45°	277,007	70	139	166	35	35	70	277	28
	90°	511,742	128	256	320	64	64	128	512	52
	PLUG	361,911	91	181	217	46	46	91	362	37

NOTES:
1. REACTION BEARING AREAS ARE IN SQUARE FEET MEASURED IN A VERTICAL PLANE IN THE TRENCH SIDE AT AN ANGLE OF 90° TO THE THRUST VECTOR.
2. USE 6" 90° BEND VALUE FOR HYDRANTS FOR ADDITIONAL SAFETY FACTOR.

CITY OF RALEIGH STANDARD DETAIL
REVISIONS | DATE: 01/18/2025 | NOT TO SCALE
THRUST BLOCKING DESIGN QUANTITY TABLE
W-11

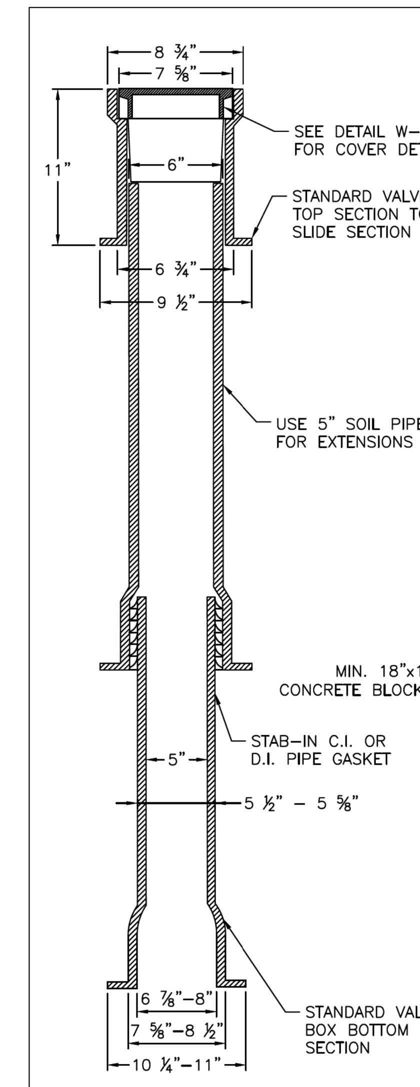

APPROVED METHOD FOR EXTENSION OF VALVE BOX

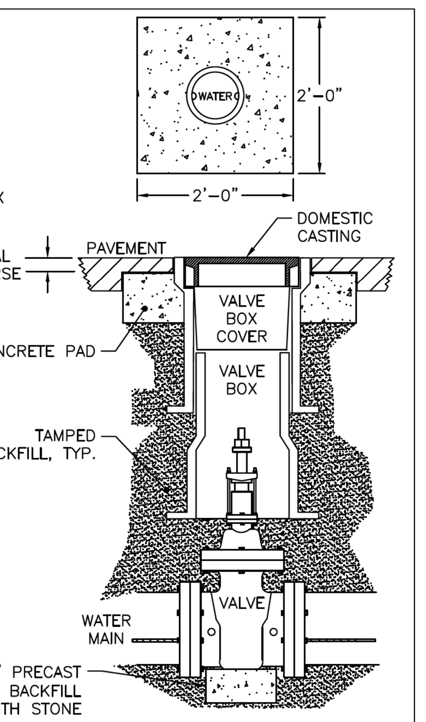

NOTES:
1. VALVE BOX NOT TO CONTACT WATER MAIN
2. ALL TRAFFIC CASTINGS MUST BE CLASS 35 OR GREATER.
3. FOR ALL VALVES OVER 10' DEEP, A VALVE STEM EXTENSION MUST BE USED TO BRING TO A DEPTH OF NO MORE THAN 5', EXTENSION MUST BE A MINIMUM OF 1" SOLID STOCK.
4. TOTAL VALVE BOX WEIGHT: MINIMUM OF 85 LBS.
5. 2'x2'x6" CONCRETE PAD REQUIRED ON ALL VALVES. NO PRECAST CONCRETE DOUGHNUT ALLOWED.

CITY OF RALEIGH STANDARD DETAIL
REVISIONS | DATE: 01/18/2025 | NOT TO SCALE
VALVE BOX INSTALLATION AND EXTENSION
W-17

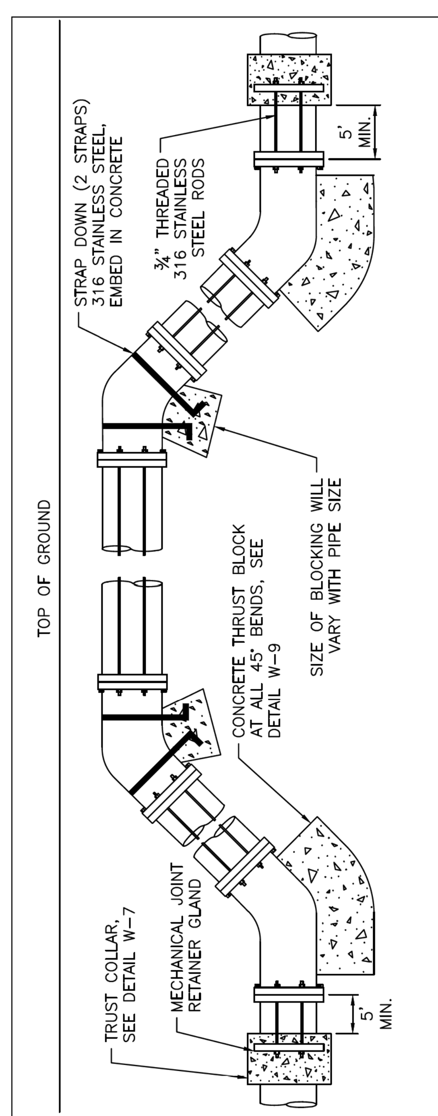

ROD REQUIREMENTS

SIZE OF 45° BEND	STATIC TRUST IN POUNDS	NO. OF RODS REQUIRED
6"	4,328	2
8"	7,694	4
12"	17,312	4
16"	30,779	8
24"	69,252	8

STRAP REQUIREMENTS

STRAP WIDTH	STRAP THICKNESS
1"	3/16"
1.5"	3/16"
2"	¼"
2"	½"
4"	½"

RESTRAINT REQUIREMENTS

PIPE DIA	RODDING	RJ GLANDS	THRUST COLLAR	THRUST BLOCKING
<12"	X	X	X	
≥12"	X	X	X	X

"X" DENOTES REQUIRED RESTRAINT.

NOTES:
1. STEEL RODS AND BOLTS SHALL BE ¾" 316 STAINLESS STEEL.
2. CONCRETE SHALL NOT CONTACT BOLTS OR ENDS OF MECHANICAL JOINT BENDS.
3. RESTRAINED MECHANICAL GLANDS TO BE USED AT ALL FITTINGS.
4. MUST USE DUCTILE IRON EYE BOLTS WHERE NECESSARY.
5. 3' MINIMUM COVER MUST BE MAINTAINED.
6. EXTERNAL RESTRAINT REQUIRED. INTEGRAL BELL RESTRAINT REQUIRES DIRECTOR'S APPROVAL.

CITY OF RALEIGH STANDARD DETAIL
REVISIONS | DATE: 01/18/2025 | NOT TO SCALE
STANDARD VERTICAL BEND
W-12

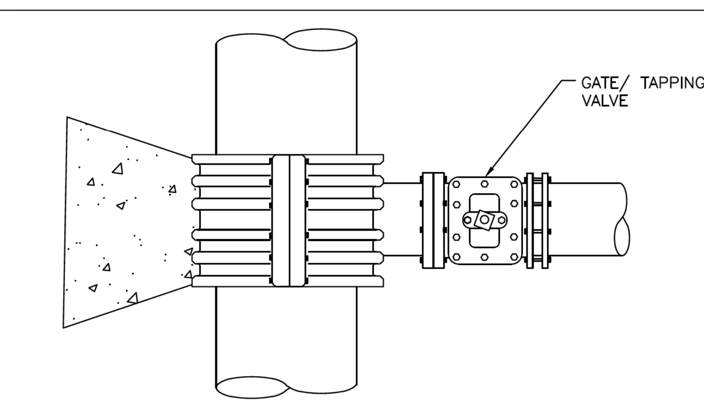

TOP VIEW

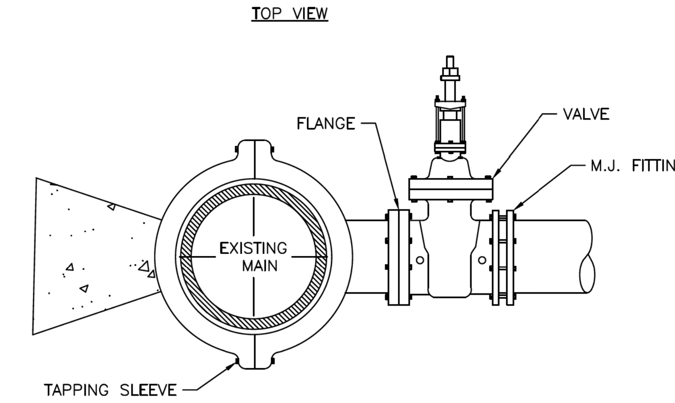

SIDE VIEW

NOTES:
1. CONCRETE SHALL NOT CONTACT BOLTS OR ENDS OF MECHANICAL JOINT FITTINGS.
2. SEE DETAIL W–10 & W–11 (REACTION BLOCK TABLES) FOR AREA OF CONCRETE REQUIRED.
3. 3,000 PSI SOLID CONCRETE SHALL BE USED AS FOOTING FOR DUCTILE IRON PIPE.
4. FULL CIRCUMFERENCE SLEEVE, STAINLESS STEEL MATERIAL REQUIRED.

CITY OF RALEIGH STANDARD DETAIL
REVISIONS | DATE: 01/18/2025 | NOT TO SCALE
4"–24" STANDARD TAPPING SLEEVE AND VALVE ASSEMBLY
W-14

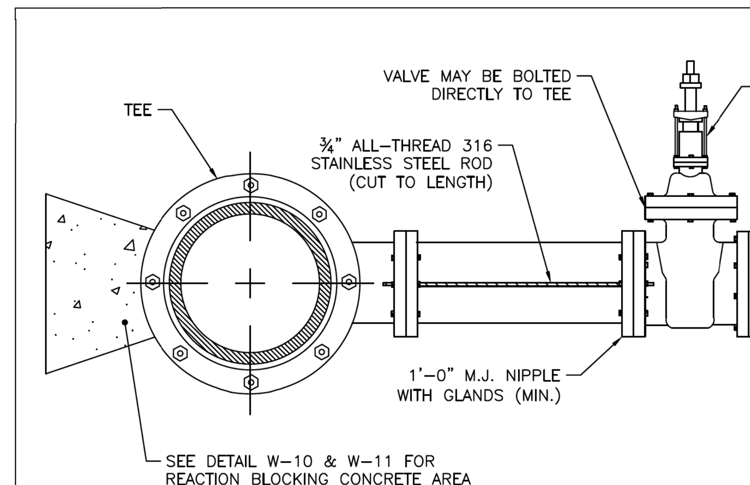

ROD REQUIREMENTS

BRANCH SIZE	NO. OF RODS
4"	2
6"	2
8"	4
12"	4
16"	6
24"	6
30"	8
36"	8

NOTES:
1. STEEL RODS AND BOLTS SHALL BE ¾" 316 STAINLESS STEEL.
2. SEE DETAIL W–10 AND W–11 (THRUST BLOCK TABLES) FOR CONCRETE.
3. CONCRETE SHALL NOT CONTACT BOLTS OR ENDS OF MECHANICAL FITTINGS.
4. THIS RODDING REQUIREMENT DOES NOT APPLY TO FIRE HYDRANTS.

CITY OF RALEIGH STANDARD DETAIL
REVISIONS | DATE: 01/18/2025 | NOT TO SCALE
VALVE RESTRAINT AT TEES AND CROSSES FOR LINES (4"–24")
W-15

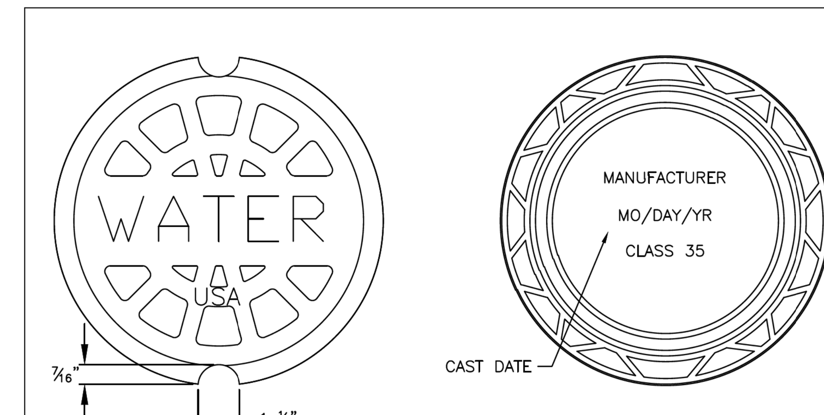

PLAN VIEW

BOTTOM VIEW

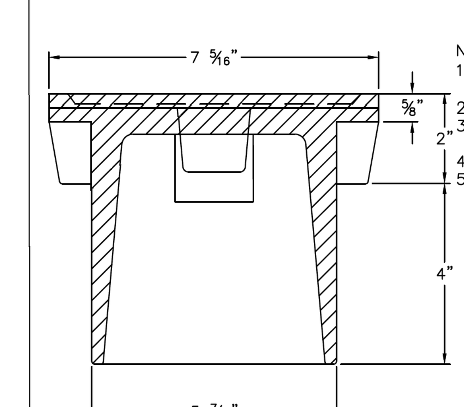

SECTION VIEW

NOTE:
1. "WATER" LETTERING MUST BE 1" RAISED (RECESSED FLUSH).
2. VALVE COVER SHALL BE DOMESTICALLY CAST.
3. COVER MUST HAVE A MINIMUM WEIGHT OF 25 POUNDS.
4. COVER MUST BE CLASS 35 OR GREATER.
5. COVER MUST MEET OR EXCEED AASHTO H–20 LOAD REQUIREMENTS.

CITY OF RALEIGH STANDARD DETAIL
REVISIONS | DATE: 01/18/2025 | NOT TO SCALE
5 ¼" VALVE BOX DROP LID WITH 4" SKIRT
W-18

DATE: 10/14/2025
TIME: 2:54:24 PM
DGN: c:\pwworking\usnc\dms07386\u5302_uc_psh_3C.dgn