METAL POLE No. 7

PROJECT REFERENCE NO.	SHEET NO.
U-5302	Sig. 14.3

Design Loading for METAL POLE NO. 7 MAST ARM A

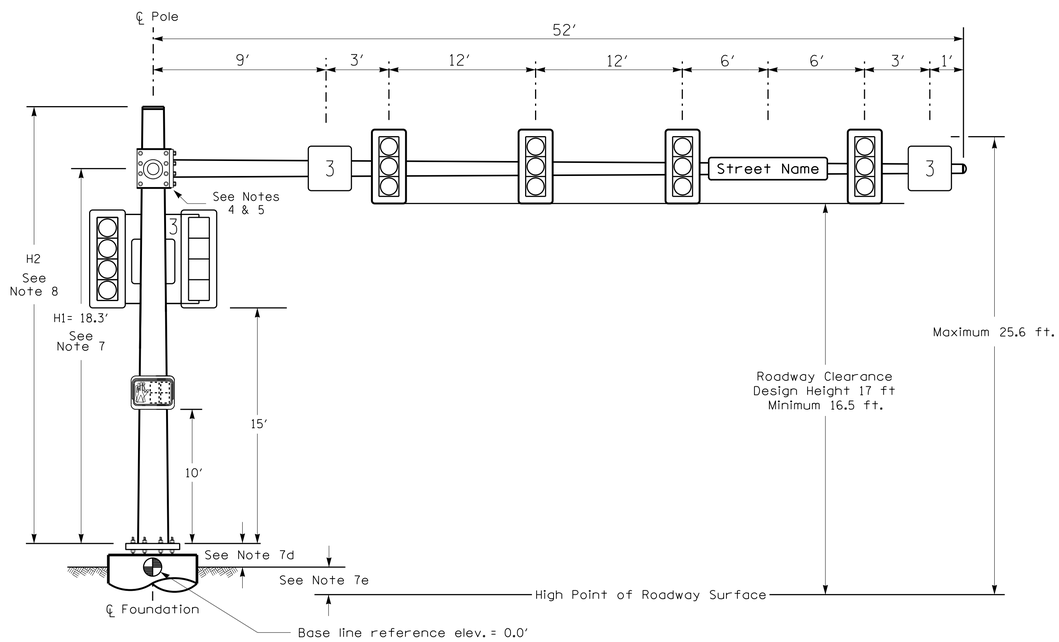

Elevation View

Design Loading for METAL POLE NO. 7 MAST ARM B

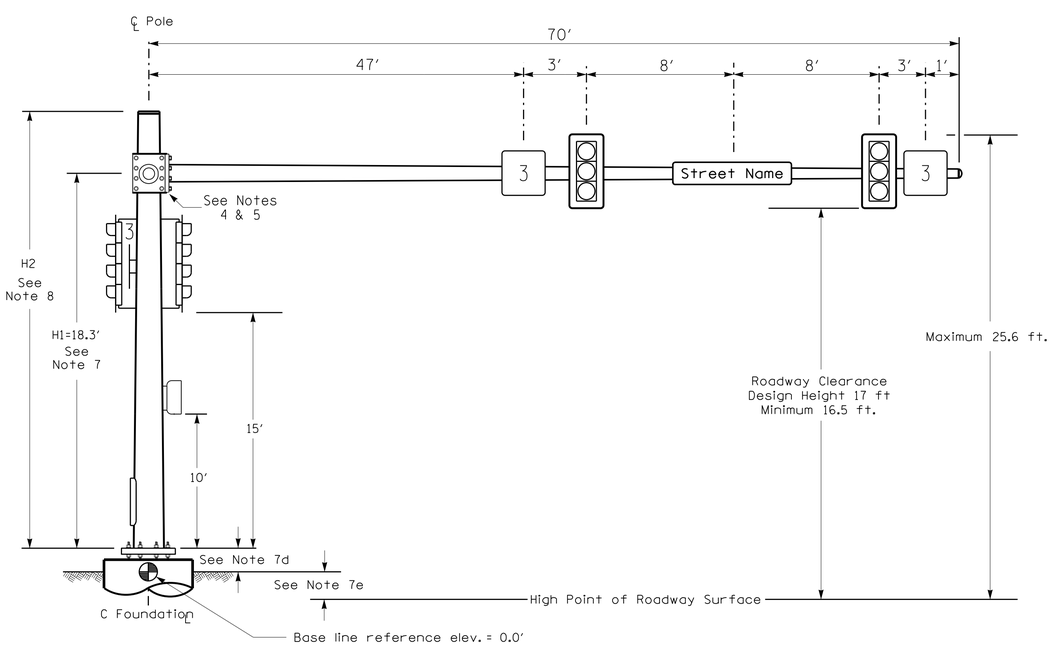

Elevation View

SPECIAL NOTE

The contractor is responsible for verifying that the mast arm attachment height (H1) will provide the "Design Height" clearance from the roadway before submitting final shop drawings for approval. Verify elevation data below which was obtained by field measurement or from available project survey data.

Elevation Data for Mast Arm Attachment (H1)

Elevation Differences for:	Arm A	Arm B
Baseline reference point at ℄ Foundation @ ground level	0.0 ft.	0.0 ft.
Elevation difference at High point of roadway surface	-0.5 ft.	-0.2 ft.
Elevation difference at Edge of travelway or face of curb	-0.5 ft.	-0.2 ft.

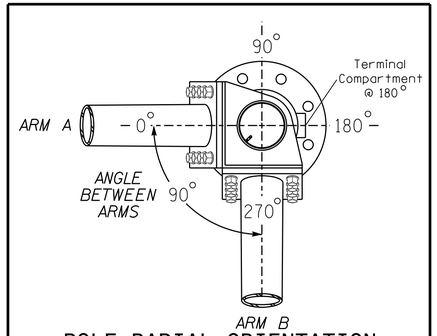

POLE RADIAL ORIENTATION

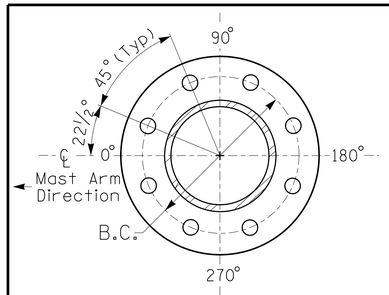

8 BOLT BASE PLATE DETAIL

See Note 6

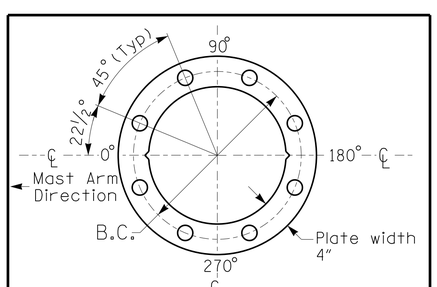

BASE PLATE TEMPLATE & ANCHOR BOLT LOCK PLATE DETAIL

For 8 Bolt Base Plate

MAST ARM LOADING SCHEDULE

LOADING SYMBOL	DESCRIPTION	AREA	SIZE	WEIGHT
	RIGID MOUNTED SIGNAL HEAD 12″-3 SECTION-WITH BACKPLATE	9.3 S.F.	25.5″ W X 52.5″ L	60 LBS
	RIGID MOUNTED SIGNAL HEAD 12″-4 SECTION-WITH BACKPLATE	11.5 S.F.	25.5″ W X 66.0″ L	74 LBS
	PEDESTRIAN SIGNAL HEAD WITH MOUNTING HARDWARE	2.2 S.F.	18.5″ W X 17.0″ L	21 LBS
3	SIGN RIGID MOUNTED	9.0 S.F.	36.0″ W X 36.0″ L	17 LBS
Street Name	STREET NAME SIGN RIGID MOUNTED	16.0 S.F.	24.0″ W X 96.0″ L	36 LBS

NOTES

DESIGN REFERENCE MATERIAL

1. Design the traffic signal structure and foundation in accordance with:
   - The 1st Edition 2015 AASHTO LRFD "Standard Specifications for Structural Supports for Highway Signs, Luminaires, and Traffic Signals, including all of the latest interim revisions.
   - The 2024 NCDOT "Standard Specifications for Roads and Structures." The latest addenda to the specifications can be found in the traffic signal project special provisions.
   - The 2024 NCDOT Roadway Standard Drawings.
   - The traffic signal project plans and special provisions.
   - The NCDOT "Metal Pole Standards" located at the following NCDOT website: https://connect.ncdot.gov/resources/safety/Pages/ITS-Design-Resources.aspx

DESIGN REQUIREMENTS

2. Design the traffic signal structure using the loading conditions shown in the elevation views. These are anticipated worst case "design loads" and may not represent the actual loads that will be applied at the time of the installation. The contractor should refer to the traffic signal plans for the actual loads that will be applied at the time of the installation.
3. Design all signal supports using force ratios that do not exceed 0.9.
4. The camber design for the mast arm deflection should provide an appearance of a low pitched arch where the tip or the free end of the mast arm does not deflect below horizontal when fully loaded.
5. A clamp-type bolted mast arm-to-pole connection may be used instead of the welded ring stiffened box connection shown as long as the connection meets all of the design requirements. This requires staggering the connections. Use elevation data for each arm to determine appropriate arm connection points.
6. Design base plate with 8 anchor bolt holes. Provide 2 inch x 60 inch anchor bolts.
7. The mast arm attachment height (H1) shown is based on the following design assumptions:
   a. Mast arm slope and deflection are not considered in determining the arm attachment height as they are assumed to offset each other.
   b. Signal heads are rigidly mounted and vertically centered on the mast arm.
   c. The roadway clearance height for design is as shown in the elevation views.
   d. The top of the pole base plate is 0.75 feet above the ground elevation.
   e. Refer to the Elevation Data Chart for the elevation differences between the proposed foundation ground level and the high point of the roadway.
8. The pole manufacturer will determine the total height (H2) of each pole using the greater of the following:
   - Mast arm attachment height (H1) plus 2 feet, or
   - H1 plus 1/2 of the total height of the mast arm attachment assembly plus 1 foot.
9. If pole location adjustments are required, the contractor must gain approval from the Engineer as this may affect the mast arm lengths and arm attachment heights. The contractor may contact the Signal Design Section Senior Structural Engineer for assistance at (919) 814-5000.
10. The contractor is responsible for verifying that the mast arm length shown will allow proper positioning of the signal heads over the roadway.
11. The contractor is responsible for providing soil penetration testing data (SPT) to the pole manufacturer so site specific foundations can be designed.

NCDOT Wind Zone 4 (120 mph)

DOCUMENT NOT CONSIDERED FINAL UNLESS ALL SIGNATURES COMPLETED

Prepared in the Offices of:
Transportation Mobility and Safety Division
STATE OF NORTH CAROLINA DEPARTMENT OF TRANSPORTATION
Signal Design Section
750 N.Greenfield Pkwy,Garner,NC 27529

US 401 (Fayetteville Road) at Pinewinds Drive and Purser Drive

Division 5 Wake County Raleigh

PLAN DATE: February 2025 REVIEWED BY:
PREPARED BY: J.A. Lohr REVIEWED BY:

SCALE 0 N/A N/A

REVISIONS	INIT.	DATE

SEAL
NORTH CAROLINA PROFESSIONAL SEAL 026486 ENGINEER ROBERT J. ZIEMBA
DocuSigned by: 1B0B1A9B6C274A4M 03/27/2025
DATE
SIG. INVENTORY NO. 05-1174 & 05-1812

27-MAR-2025 07:29
s:\Traffic\Traffic Groups-TEC\ITSAS\ITS Signals\Signal Design Sections\Central Region\Div 5\U-5302\2025 Updates\051174_sig_mp_2025mmdd.dgn
JALohr