STATE	PROJECT NO.	SHEET NO.	TOTAL SHEETS
N.C.	2026CPT.10.15.10901 2026CPT.10.15.20901 2026CPT.10.15.20902	14	

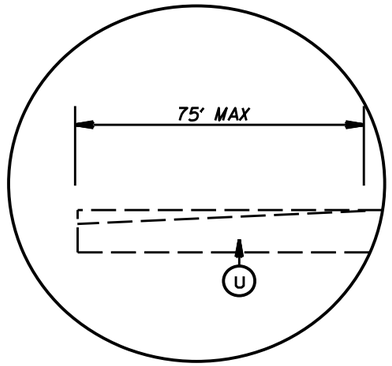

DETAIL FOR INCIDENTAL MILLING (0" TO 1.5")

PATCHING DETAIL

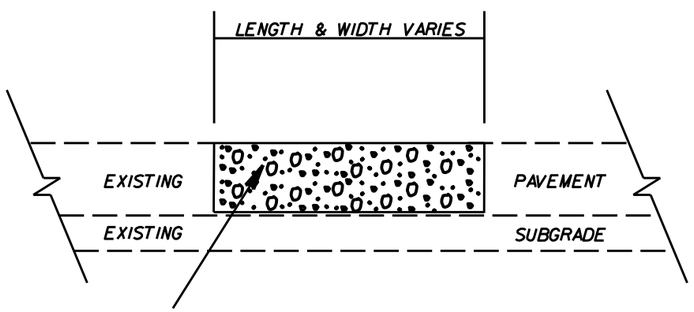

RATE IS VARIABLE AND SHALL BE
AS DIRECTED BY THE ENGINEER.
ASPHALT TYPE 119.0C SHALL BE PLACED.

PAVEMENT SCHEDULE

C1	PROP. APPROX. 1.5" ASPHALT CONC. SURFACE COURSE, TYPE S9.5B, AT AN AVERAGE RATE OF 165 LBS. PER SQ. YD.
C2	PROP. APPROX. 1.5" ASPHALT CONC. SURFACE COURSE, TYPE S9.5C, AT AN AVERAGE RATE OF 168 LBS. PER SQ. YD.
E1	PROP. APPROX. 5.0" ASPHALT CONC. BASE COURSE, TYPE B25.0C, AT AN AVERAGE RATE OF 570 LBS PER SQ. YD.
F1	ASPHALT SURFACE TREATMENT, SINGLE SEAL
M	CENTERLINE MILLLED RUMBLE STRIPS
T1	SHOULDER RECONSTRUCTION
U	EXISTING PAVEMENT
V1	INCIDENTAL MILLING OF EXISTING ASPHALT RIDING SURFACE ON BRIDGE 1.5" DEPTH.
Z	FULL DEPTH RECLAMATION

2026
UNION COUNTY RESURFACING

		REVISIONS	
SCALE	-NA-		
DATE	1/20		
DWG. BY	AMO		
DESIGN BY	AMO		
APPROVED	CLA		