Docusign Envelope ID: 796B3616-D0DF-4326-BDFA-A43BAD139790

PROJECT REFERENCE NO.	SHEET NO.
HL-0025	2A-5

ROADWAY DESIGN ENGINEER — NORTH CAROLINA PROFESSIONAL SEAL 030740 ENGINEER STEVEN MATHEW KARNIS — Signed by: Steve Karnis 1/7/2026

PAVEMENT DESIGN ENGINEER — NORTH CAROLINA PROFESSIONAL SEAL 024964 ENGINEER JOSEPH T. HOLLAND — Signed by: Joseph Holland 1/7/2026

DOCUMENT NOT CONSIDERED FINAL UNLESS ALL SIGNATURES COMPLETED

PAVEMENT SCHEDULE (FINAL PAVEMENT DESIGN)	
C1	1½" S9.5B
C2	3" S9.5B
C3	VAR. S9.5B
D1	4" I19.0C
D2	VAR. I19.0C
E1	4" B25.0C
E2	VAR. B25.0C
J1	6" ABC
J2	8" ABC
R1	2'-6" C&G
R2	1'-6" C&G
S1	4" CONC. SW
S2	4" CONC. SIDE PATH
T	EARTH MATERIAL
U	EXIST. PAVE.
V	INCD. MILL.
W	WEDGING

NOTE: ALL PAVEMENT EDGE SLOPES ARE 1:1 UNLESS SHOWN OTHERWISE.

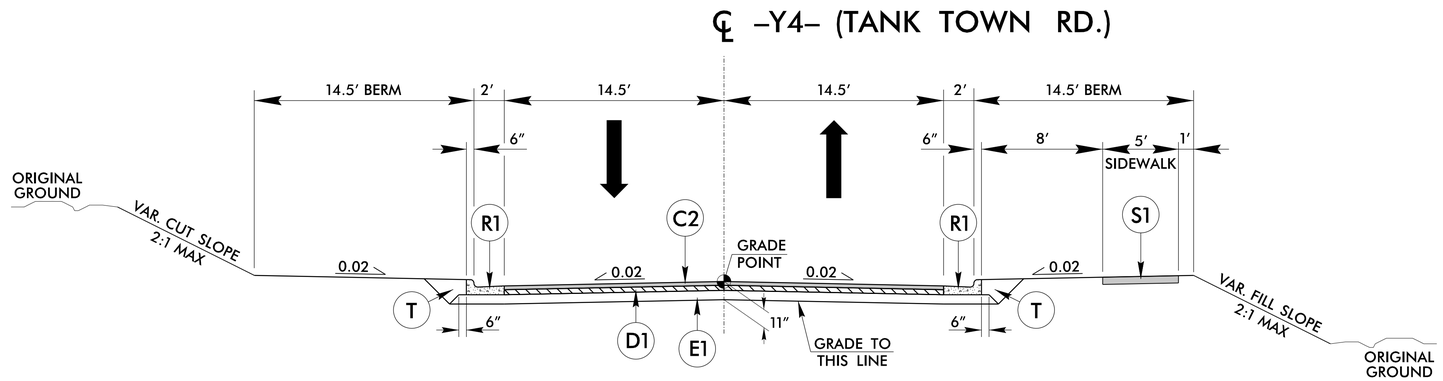

TYPICAL SECTION 11

FROM –Y4– STA. 11+80.54 TO STA. 13+20.35

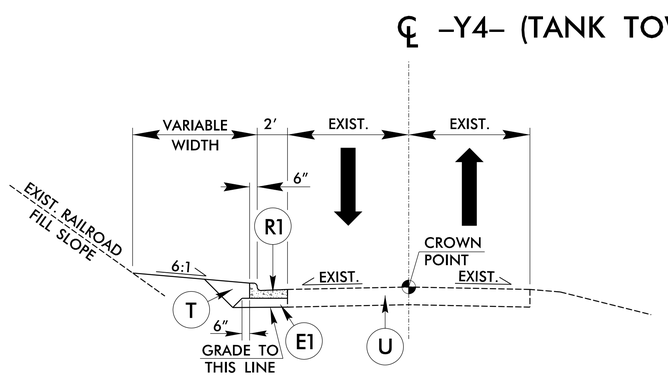

TYPICAL SECTION 12

FROM –Y4– STA. 9+28.00 TO STA. 10+45.00

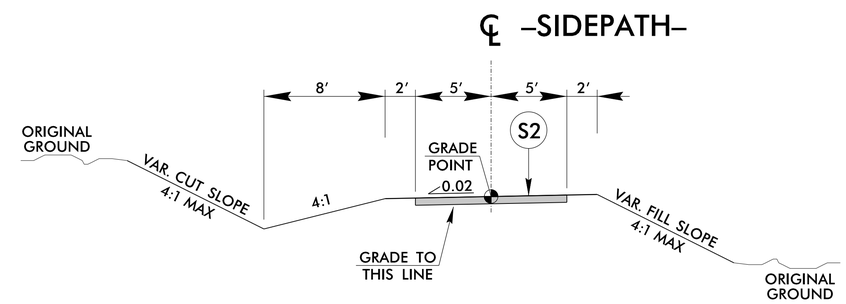

TYPICAL SECTION 13

FROM –SIDEPATH– STA. 25+30.00 TO STA. 26+65.00

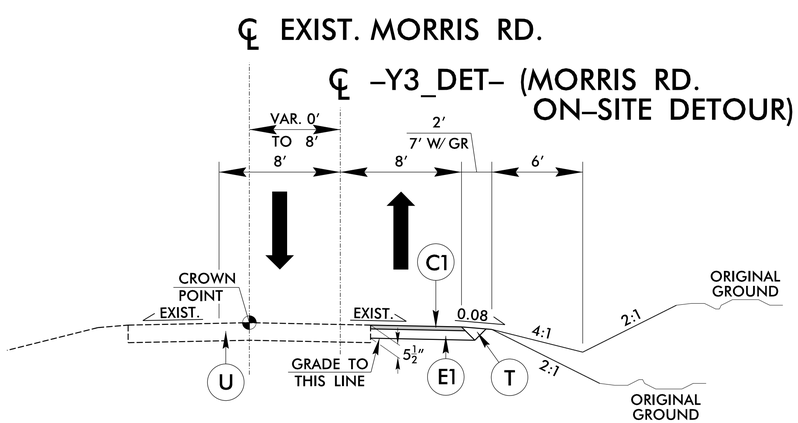

TYPICAL SECTION 14

FROM –Y3_DET– STA. 10+24.72 TO STA. 10+64.34

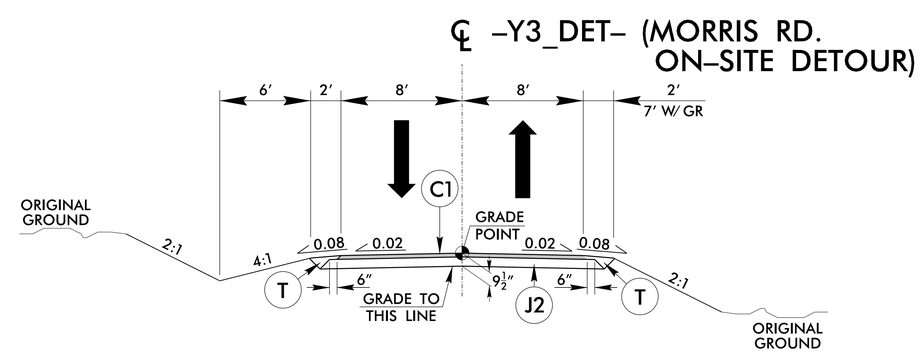

TYPICAL SECTION 15

FROM –Y3_DET– STA. 10+64.34 TO STA. 12+72.16
FROM –Y3_DET– STA. 13+00.99 TO STA. 13+47.10

AMT
A. MORTON THOMAS AND ASSOCIATES, INC.
10735 DAVID TAYLOR DRIVE, SUITE 310 • CHARLOTTE, NC 28262
(704) 595-9975 • NC LICENSE NO. F-1049
WWW.AMTENGINEERING.COM

6/2/99
12/30/2025
X:\Raleigh\17-1112.013 - HL-0025 - Greylock Ridge Rd Ext\05-CAD\Greylock_Ridge_Ext\Roadway\Proj\Greylock_Rdy_typ.dgn
dmorgan