Docusign Envelope ID: 894D52B0-6D19-4959-AEE2-1ED05D85142D

PAVEMENT SCHEDULE (FINAL PAVEMENT DESIGN)	
C1	1½" S9.5B
C2	3" S9.5B
C3	VAR. S9.5B
D1	4" I19.0C
D2	VAR. I19.0C
E1	4" B25.0C
E2	VAR. B25.0C
J1	6" ABC
J2	8" ABC
R1	2'-6" C&G
R2	1'-6" C&G
S1	4" CONC. SW
S2	4" CONC. SIDE PATH W/ WELDED WIRE MESH
T	EARTH MATERIAL
U	EXIST. PAVE.
V	INCD. MILL.
W	WEDGING

NOTE: ALL PAVEMENT EDGE SLOPES ARE 1:1 UNLESS SHOWN OTHERWISE.

PROJECT REFERENCE NO.	SHEET NO.
HL-0025	2A-3

ROADWAY DESIGN ENGINEER — NORTH CAROLINA PROFESSIONAL SEAL 045246 ENGINEER JASON T. GADDY — Docusigned by: 3/5/2026 — BAE5D64400BA486...

PAVEMENT DESIGN ENGINEER — NORTH CAROLINA PROFESSIONAL SEAL 024964 ENGINEER JOSHUA HOLLAND — Signed by: 3/5/2026 — 719653B195ED44E...

DOCUMENT NOT CONSIDERED FINAL UNLESS ALL SIGNATURES COMPLETED

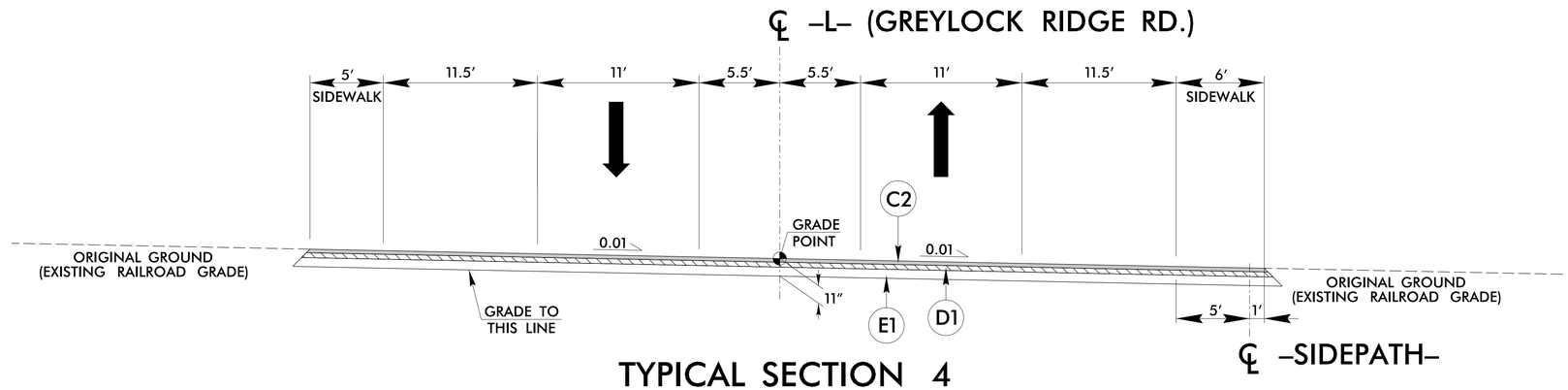

TYPICAL SECTION 4

FROM –L– STA. 23+57.46 TO STA. 23+62.71
FROM –L– STA. 23+78.71 TO STA. 23+83.46

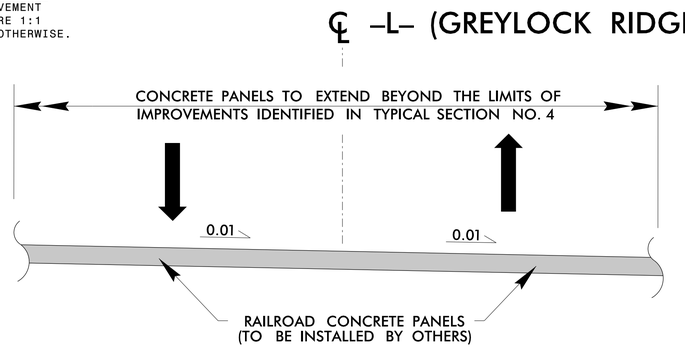

TYPICAL SECTION 5

FROM –L– STA. 23+62.71 TO STA. 23+78.71

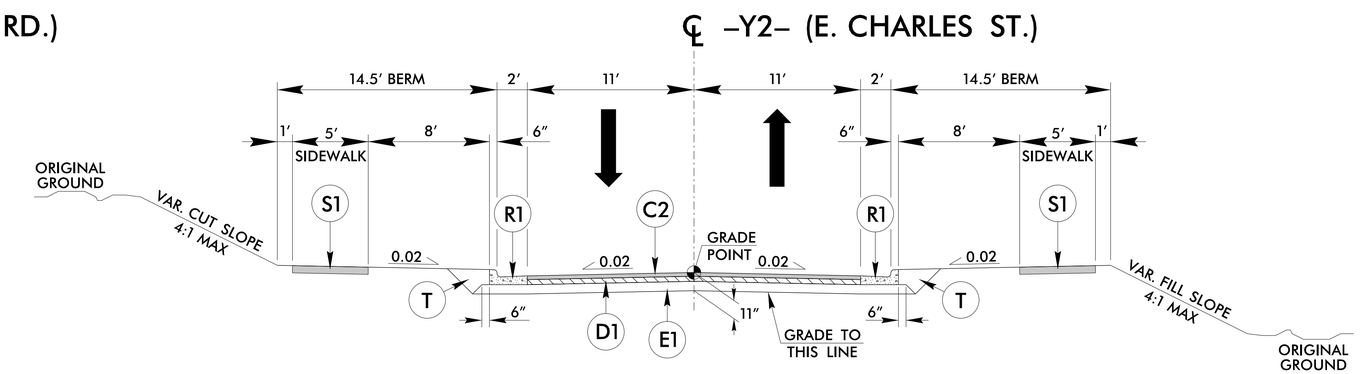

TYPICAL SECTION 6

FROM –Y2– STA. 10+16.28 TO STA. 10+83.50

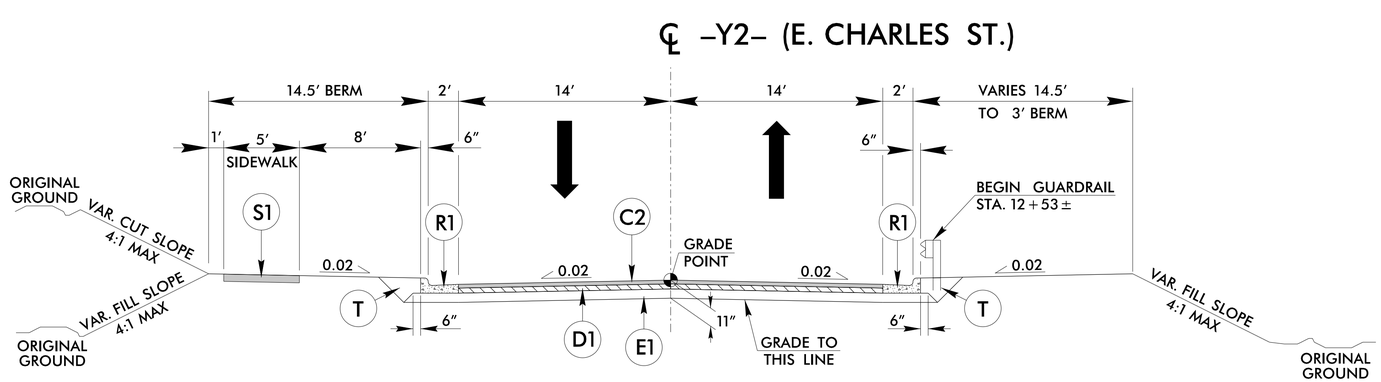

TYPICAL SECTION 7

FROM –Y2– STA. 11+16.50 TO STA. 14+05.00

AMT
A. MORTON THOMAS AND ASSOCIATES, INC.
10735 DAVID TAYLOR DRIVE, SUITE 310 • CHARLOTTE, NC 28262
(704) 595-9975 • NC LICENSE NO. F-1049
WWW.AMTENGINEERING.COM

6/2/99
3/5/2026
X:\Raleigh\17-1112.013 - HL-0025 - Greylock Ridge Rd Ext\05-CAD\Greylock_Ridge_Ext\Roadway\Proj\Greylock_Rdy_typ.dgn
default