Docusign Envelope ID: 56D4DAEB-23E5-4737-813E-7EA7C7B28B61

09/08/99

TIP PROJECT: U-3609B

CONTRACT: C205035

See Sheet 1A For Index of Sheets
See Sheet 1B For Conventional Symbols

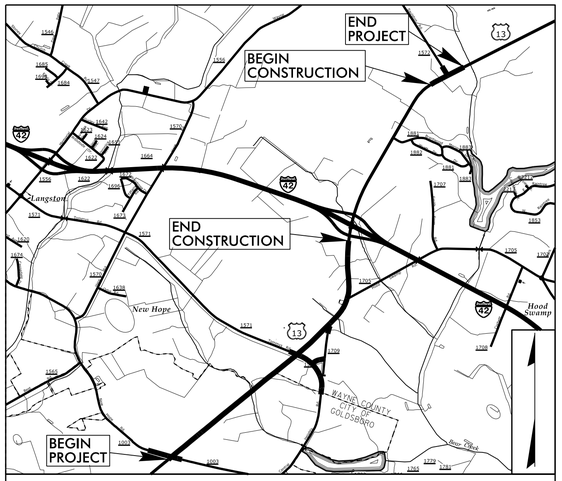

VICINITY MAP

STATE OF NORTH CAROLINA
DIVISION OF HIGHWAYS

WAYNE COUNTY

STATE	STATE PROJECT REFERENCE NO.	SHEET NO.	TOTAL SHEETS
N.C.	U-3609B	1	

STATE PROJ. NO.	F.A. PROJ. NO.	DESCRIPTION
39026.1.2	N/A	PE
39026.2.2	N/A	UTIL., R/W
39026.3.2	N/A	CONSTR.

LOCATION: U.S. 13 (BERKELEY BLVD) FROM S.R. 1003 (NEW HOPE RD) TO US 70 BYPASS W/ INTERSECTION IMPROVEMENTS AT AT SR 1572 (SAULSTON RD). WIDEN TO FOUR LANES

TYPE OF WORK: CULVERT, DRAINAGE, GRADING, PAVING, AND SIGNALS

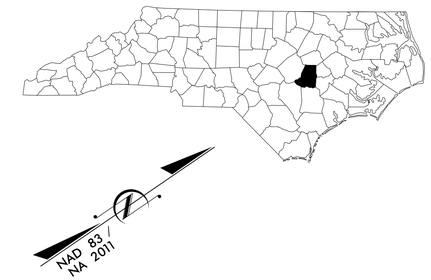

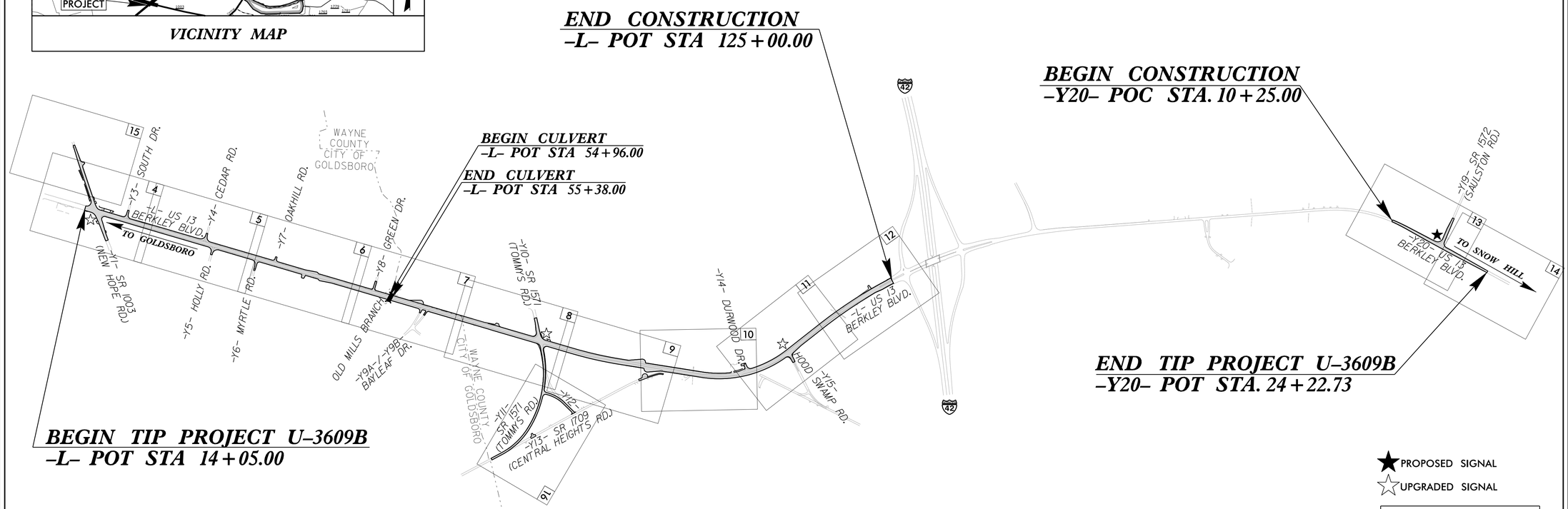

★ PROPOSED SIGNAL
☆ UPGRADED SIGNAL

– THIS IS A PARTIAL CONTROLLED–ACCESS PROJECT WITH ACCESS BEING LIMITED TO POINTS AS SHOWN ON THE PLANS.

DOCUMENT NOT CONSIDERED FINAL UNLESS ALL SIGNATURES COMPLETED

GRAPHIC SCALES

50 25 0 50 100
PLANS

50 25 0 50 100
PROFILE (HORIZONTAL)

10 5 0 10 20
PROFILE (VERTICAL)

DESIGN DATA

ADT 2025 = 16,800
ADT 2045 = 19,200
K = 9 %
D = 55 %
T = 3 % *
V = 50/60 MPH
* TTST = 1% DUAL = 2%
FUNC CLASS = PRINCIPAL AND MINOR ARTERIAL
STATEWIDE TIER

PROJECT LENGTH

LENGTH ROADWAY TIP PROJECT U-3609B = 2.357 miles
LENGTH STRUCTURES TIP PROJECT U-3609B = 0.009 miles
TOTAL LENGTH TIP PROJECT U-3609B = 2.366 miles

Prepared in the Office of:

Stantec
Stantec Consulting Services Inc.
801 Jones Franklin Road
Suite 300
Raleigh, NC 27606
Tel. (919) 851-6866 Fax. (919) 851-7024
www.stantec.com License No. F-0672

MI ENGINEERING
1011 SCHAUB DRIVE, SUITE 100
RALEIGH, NC 27606
(919) 851-6606
FIRM PE NUMBER : P-0671

2024 STANDARD SPECIFICATIONS

RIGHT OF WAY DATE:
FEBRUARY 21, 2020

LETTING DATE:
FEBRUARY 17, 2026

KATRINA N. HAZEL, P.E.
PROJECT ENGINEER

ADDISON GAINEY, P.E.
NCDOT DIVISION 4

HYDRAULICS ENGINEER

NORTH CAROLINA PROFESSIONAL SEAL 031025 ENGINEER KAREN HEFNER
12/23/2025

DocuSigned by: Karen Hefner
P.E.
SIGNATURE:

ROADWAY DESIGN ENGINEER

NORTH CAROLINA PROFESSIONAL SEAL 034404 ENGINEER KATRINA N. HAZEL
12/23/2025

Signed by: Katrina N Hazel
P.E.
SIGNATURE:

STATE OF NORTH CAROLINA DEPARTMENT OF TRANSPORTATION

12/23/2025
U:\Roadway\Proj\U3609B_rdy_tsh.dgn
khazel

Docusign Envelope ID: 5BEC07C3-22DF-4939-99FC-60F4D2BB7B09

Stantec

Stantec Consulting Services Inc.
801 Jones Franklin Road
Suite 300
Raleigh, NC 27606
Tel. (919) 851-6866
Fax. (919) 851-7024
www.stantec.com
License No. F-0672

PROJECT REFERENCE NO.	SHEET NO.
U-3609B	1A
R/W SHEET NO.	

ROADWAY DESIGN ENGINEER

NORTH CAROLINA PROFESSIONAL SEAL 034404 ENGINEER KATRINA N. HAZEL
12/11/2025
Signed by: Katrina N Hazel
F8B7052080564FC...

DOCUMENT NOT CONSIDERED FINAL UNLESS ALL SIGNATURES COMPLETED

INDEX OF SHEETS

SHEET NUMBER	SHEET
1	TITLE SHEET
1A	INDEX OF SHEETS, GENERAL NOTES, AND STANDARD DRAWINGS
1B	CONVENTIONAL SYMBOLS
2A-1 THRU 2A-9	PAVEMENT SCHEDULE, WEDGING DETAILS, AND TYPICAL SECTIONS
2B-1 THRU 2B-4	ROADWAY INTERSECTION AND JOINT REPAIR DETAILS
2C-1	MINIMUM DEPTH CONCRETE CATCH BASIN
2C-2	MINIMUM DEPTH CONCRETE & BRICK DROP INLET DETAILS
2C-3	TRAFFIC BEARING JUNCTION BOX FOR EXISTING 3'X3' RCBC AND PROPOSED 42" RCP DETAIL
2C-4 THRU 2C-5	METHOD OF PIPE INSTALLATION DETAILS
2C-6	CONCRETE SIDEWALK DETAIL
2C-7	CURB RAMP - TYPE 3 DETAIL
2C-8	TRANSITION 2'6" CURB & GUTTER TO 2' PAVED SHOULDER DETAIL
2C-9	TRANSITION 2'6" CURB & GUTTER TO 8"x12" OR 8"x18" CURB DETAIL
2C-10	TRANSITION 1'6" CURB & GUTTER TO MONOLITHIC ISLAND DETAIL
2C-11	GUARDRAIL INSTALLATION DETAIL
2C-12	GUARDRAIL PLACEMENT DETAIL
2G-1	TEMPORARY SHORING DETAIL
3B-1	PAVEMENT REMOVAL SUMMARY, SUMMARY OF EARTHWORK, AND GUARDRAIL SUMMARY
3D-1 THRU 3D-14	LIST OF PIPES, ENDWALLS, ETC (FOR PIPES 48 INCHES & UNDER)
3D-15	LIST OF PIPES, ENDWALLS, ETC (FOR PIPES 54 INCHES & OVER)
3G-1	GEOTECHNICAL SUMMARIES
3P-1 THRU 3P-2	PARCEL INDEX SHEETS
4 THRU 28	PLAN AND PROFILE SHEETS
RW-1THRU RW-16	SURVEY CONTROL, EXISTING CENTERLINES, RIGHT OF WAY, EASEMENT AND PROPERTY TIES
TMP-1 THRU TMP-33	TRAFFIC MANAGEMENT PLANS
PMP-1 THRU PMP-14	PAVEMENT MARKING PLANS
EC-1 THRU EC-29	EROSION CONTROL PLANS
RF-1	REFORESTATION PLANS
SIGN-1 THRU SIGN-17	SIGNING PLANS
SIG-1 THRU SIG-12.2	SIGNAL PLANS
SIG.M1A THRU SIG.M9	METAL POLE STANDARDS
SCP-1 THRU SCP-14	CABLE ROUTING & FIBER SPLICING PLANS
UC-1 THRU UC-11	UTILITIES CONSTRUCTION PLANS
UO-1 THRU UO-14	UTILITIES BY OTHERS PLANS
X-1	CROSS-SECTION INDEX
X-1A THRU X-1D	CROSS-SECTION SUMMARY SHEETS
X-2 THRU X-115	CROSS-SECTIONS
C-1THRU C-8	CULVERT PLANS

GENERAL NOTES:

2024 SPECIFICATIONS
EFFECTIVE: 01-16-2024
REVISED:

GRADING AND SURFACING OR RESURFACING AND WIDENING:

THE GRADE LINES SHOWN DENOTE THE FINISHED ELEVATION OF THE PROPOSED SURFACING AT GRADE POINTS SHOWN ON THE TYPICAL SECTIONS. WHERE NO GRADE LINES ARE SHOWN, THE PROFILES SHOWN DENOTE THE TOP ELEVATION OF THE EXISTING PAVEMENT ALONG THE CENTER LINE OF SURVEY ON WHICH THE PROPOSED RESURFACING WILL BE PLACED. GRADE LINES MAY BE ADJUSTED BY THE ENGINEER IN ORDER TO SECURE A PROPER TIE-IN.

CLEARING:

CLEARING ON THIS PROJECT SHALL BE PERFORMED TO THE LIMITS ESTABLISHED BY METHOD III.

SUPERELEVATION:

ALL CURVES ON THIS PROJECT SHALL BE SUPERELEVATED IN ACCORDANCE WITH STD. NO. 225.04 USING THE RATE OF SUPERELEVATION AND RUNOFF SHOWN ON THE PLANS. SUPERELEVATION IS TO BE REVOLVED ABOUT THE GRADE POINTS SHOWN ON THE TYPICAL SECTIONS.

SHOULDER CONSTRUCTION:

ASPHALT, EARTH, AND CONCRETE SHOULDER CONSTRUCTION ON THE HIGH SIDE OF SUPERELEVATED CURVES SHALL BE IN ACCORDANCE WITH STD. NO. 560.01

SIDE ROADS:

THE CONTRACTOR WILL BE REQUIRED TO DO ALL NECESSARY WORK TO PROVIDE SUITABLE CONNECTIONS WITH ALL ROADS, STREETS, AND DRIVES ENTERING THIS PROJECT. THIS WORK WILL BE PAID FOR AT THE CONTRACT UNIT PRICE FOR THE PARTICULAR ITEMS INVOLVED.

SUBSURFACE DRAINS:

SUBSURFACE DRAINS SHALL BE CONSTRUCTED IN ACCORDANCE WITH STD. NO. 815.02 AT LOCATIONS DIRECTED BY THE ENGINEER.

DRIVEWAYS:

DRIVEWAYS SHALL BE CONSTRUCTED IN ACCORDANCE WITH STD. 848.02 USING 3 FOOT RADII OR RADII AS SHOWN ON THE PLANS. LOCATIONS OF DRIVES WILL BE AS SHOWN ON THE PLANS OR AS DIRECTED BY THE ENGINEER.

STREET TURNOUT:

STREET RETURNS SHALL BE CONSTRUCTED IN ACCORDANCE WITH STD. NO. 848.04 USING THE RADII NOTED ON PLANS.

GUARDRAIL:

THE GUARDRAIL LOCATIONS SHOWN ON THE PLANS MAY BE ADJUSTED DURING CONSTRUCTION AS DIRECTED BY THE ENGINEER. THE CONTRACTOR SHOULD CONSULT WITH THE ENGINEER PRIOR TO ORDERING GUARDRAIL MATERIAL.

TEMPORARY SHORING:

SHORING REQUIRED FOR THE MAINTENANCE OF TRAFFIC NOT SHOWN ON THE PLANS WILL BE PAID FOR AT THE CONTRACT PRICE FOR "TEMPORARY SHORING".

UTILITIES:

UTILITY OWNERS ON THIS PROJECT ARE:

POWER - DUKE ENERGY PROGRESS

GAS - PIEDMONT NATURAL GAS COMPANY, INC.

WATER - EASTERN WAYNE SANITARY DISTRICT

WATER - FORK TOWNSHIP SANITARY DISTRICT

WATER - CITY OF COLDSBORO WATER & SEWER (IN CONTRACT)

COMMUNICATIONS - AT&T CORP.

COMMUNICATIONS - SPECTRUM

COMMUNICATIONS - CONTERRA

ITS - NCDOT (IN CONTRACT)

ANY RELOCATION OF EXISTING UTILITIES WILL BE ACCOMPLISHED BY OTHERS, EXCEPT AS SHOWN ON THE PLANS.

RIGHT-OF-WAY MARKERS:

ALL RIGHT-OF-WAY MARKERS ON THIS PROJECT SHALL BE PLACED BY STATE FORCES.

CURB RAMPS

CURB RAMPS ARE SHOWN ON THE PLANS AT APPROXIMATE LOCATIONS. CONSTRUCT ALL CURB RAMPS ACCORDANCE WITH STD 848.06.

EFF. 01-16-2024
REV.

2024 ROADWAY ENGLISH STANDARD DRAWINGS

The following Roadway Standards as appear in "Roadway Standard Drawings" Contracts Standards and Development Unit - N. C. Department of Transportation - Raleigh, N. C., Dated January 16, 2024 are applicable to this project and by reference hereby are considered a part of these plans:

STD.NO.	TITLE
DIVISION 2 - EARTHWORK	
200.02	Method of Clearing - Method III
225.02	Guide for Grading Subgrade - Secondary and Local
225.04	Method of Obtaining Superelevation - Two Lane Pavement
225.06	Method of Grading Sight Distance at Intersections
DIVISION 3 - PIPE CULVERTS	
310.10	Driveway Pipe Construction
DIVISION 5 - SUBGRADE, BASES AND SHOULDERS	
560.01	Method of Shoulder Construction - High Side of Superelevated Curve - Method I
DIVISION 6 - ASPHALT BASES AND PAVEMENTS	
654.01	Pavement Repairs
DIVISION 8 - INCIDENTALS	
815.02	Subsurface Drain
838.01	Concrete Endwall for Single and Double Pipe Culverts - 15" thru 48" Pipe 90 Skew
838.11	Brick Endwall for Single and Double Pipe Culverts - 15" thru 48" Pipe 90 Skew
838.21	Reinforced Concrete Endwall - for Single 54" Pipe 90 Skew
838.22	Reinforced Concrete Endwall - for Double and Triple 54" Pipes 90 Skew
838.45	Notes for Reinforced Concrete Endwall - Std. Dwg 838.21 thru 838.40
838.51	Reinforced Brick Endwall - for Single 54" Pipe 90 Skew
838.52	Reinforced Brick Endwall - for Double and Triple 54" Pipes 90 Skew
838.75	Notes for Reinforced Brick Endwall - Std. Dwg 838.51 thru 838.70
838.80	Precast Endwalls - 12" thru 72" Pipe 90 Skew
840.00	Concrete Base Pad for Drainage Structures
840.01	Brick Catch Basin - 12" thru 54" Pipe
840.02	Concrete Catch Basin - 12" thru 54" Pipe
840.03	Frame, Grates and Hood - for Use on Standard Catch Basin
840.14	Concrete Drop Inlet - 12" thru 30" Pipe
840.15	Brick Drop Inlet - 12" thru 30" Pipe
840.16	Drop Inlet Frame and Grates - for use with Std. Dwg 840.14 and 840.15
840.18	Concrete Grated Drop Inlet Type 'B' - 12" thru 36" Pipe
840.19	Concrete Grated Drop Inlet Type 'D' - 12" thru 36" Pipe
840.24	Frames and Narrow Slot Sag Grates
840.25	Anchorage for Frames - Brick or Concrete or Precast
840.27	Brick Grated Drop Inlet Type 'B' - 12" thru 36" Pipe
840.28	Brick Grated Drop Inlet Type 'D' - 12" thru 36" Pipe
840.29	Frames and Narrow Slot Flat Grates
840.31	Concrete Junction Box - 12" thru 66" Pipe
840.32	Brick Junction Box - 12" thru 66" Pipe
840.34	Traffic Bearing Junction Box - for Use with Pipes 42" and Under
840.35	Traffic Bearing Grated Drop Inlet - for Cast Iron Double Frame and Grates
840.45	Precast Drainage Structure
840.46	Traffic Bearing Precast Drainage Structure
840.54	Manhole Frame and Cover
840.66	Drainage Structure Steps
846.01	Concrete Curb, Gutter and Curb & Gutter
848.02	Driveway Turnout - Radius Type
848.04	Street Turnout
848.06	Curb Ramp
852.01	Concrete Islands
852.04	Method for Placement of Drop Inlets in Grassed Median - Using 1'-6" Curb and Gutter
852.05	Median Curb for Catch Basin - for Use with 1'-6" Curb and Gutter
852.06	Method for Placement of Drop Inlets in Concrete Islands
852.10	Median Construction - with Curb and Gutter
862.02	Guardrail Installation
876.01	Rip Rap in Channels and Ditches
876.02	Guide for Rip Rap at Pipe Outlets
876.04	Drainage Ditches with Class 'B' Rip Rap

8/17/99
11/25/2025
U:\Roadway\Proj\U3609B_rdy_1A sheet.dgn

Docusign Envelope ID: 5BEC07C3-22DF-4939-99FC-60F4D2BB7B09

05/20/24

PROJECT REFERENCE NO.	SHEET NO.
U-3609B	1B

STATE OF NORTH CAROLINA, DIVISION OF HIGHWAYS
CONVENTIONAL PLAN SHEET SYMBOLS

Note: Not to Scale

BOUNDARIES AND PROPERTY:

- State Line
- County Line
- Township Line
- City Line
- Reservation Line
- Property Line
- Existing Iron Pin (EIP) — EIP
- Computed Property Corner
- Existing Concrete Monument (ECM) — ECM
- Parcel / Sequence Number — 123
- Existing Fence Line
- Proposed Woven Wire Fence
- Proposed Chain Link Fence
- Proposed Barbed Wire Fence
- Existing Wetland Boundary — WLB
- Proposed Wetland Boundary — WLB
- Existing Endangered Animal Boundary — EAB
- Existing Endangered Plant Boundary — EPB
- Existing Historic Property Boundary — HPB
- Known Contamination Area: Soil — S
- Potential Contamination Area: Soil — S
- Known Contamination Area: Water — W
- Potential Contamination Area: Water — W
- Contaminated Site: Known or Potential

BUILDINGS AND OTHER CULTURE:

- Gas Pump Vent or U/G Tank Cap
- Sign — S
- Well — W
- Small Mine
- Foundation
- Area Outline
- Cemetery
- Building
- School
- Church
- Dam

HYDROLOGY:

- Stream or Body of Water
- Hydro, Pool or Reservoir
- Jurisdictional Stream — JS
- Buffer Zone 1 — BZ 1
- Buffer Zone 2 — BZ 2
- Flow Arrow
- Disappearing Stream
- Spring
- Wetland
- Proposed Lateral, Tail, Head Ditch — FLOW
- False Sump

RAILROADS:

- Standard Gauge — CSX TRANSPORTATION
- RR Signal Milepost — MILEPOST 35
- Switch — SWITCH
- RR Abandoned
- RR Dismantled

RIGHT OF WAY & PROJECT CONTROL:

- Primary Horiz Control Point
- Primary Horiz and Vert Control Point
- Secondary Horiz and Vert Control Point
- Vertical Benchmark
- Existing Right of Way Monument
- Proposed Right of Way Monument (Rebar and Cap)
- Proposed Right of Way Monument (Concrete)
- Existing Permanent Easement Monument
- Proposed Permanent Easement Monument (Rebar and Cap)
- Existing C/A Monument
- Proposed C/A Monument (Rebar and Cap)
- Proposed C/A Monument (Concrete)
- Existing Right of Way Line
- Proposed Right of Way Line — RW
- Existing Control of Access Line — CA
- Proposed Control of Access Line — CA
- Proposed ROW and CA Line — RW CA
- Existing Easement Line — E
- Proposed Temporary Construction Easement — E
- Proposed Temporary Drainage Easement — TDE
- Proposed Permanent Drainage Easement — PDE
- Proposed Permanent Drainage/Utility Easement — DUE
- Proposed Permanent Utility Easement — PUE
- Proposed Temporary Utility Easement — TUE
- Proposed Aerial Utility Easement — AUE

ROADS AND RELATED FEATURES:

- Existing Edge of Pavement
- Existing Curb
- Proposed Slope Stakes Cut — C
- Proposed Slope Stakes Fill — F
- Proposed Curb Ramp — CR
- Existing Metal Guardrail
- Proposed Guardrail
- Existing Cable Guiderail
- Proposed Cable Guiderail
- Equality Symbol
- Pavement Removal

VEGETATION:

- Single Tree
- Single Shrub
- Hedge
- Woods Line
- Orchard
- Vineyard — Vineyard

EXISTING STRUCTURES:

MAJOR:

- Bridge, Tunnel or Box Culvert — CONC
- Bridge Wing Wall, Head Wall and End Wall — CONC WW

MINOR:

- Head and End Wall — CONC HW
- Pipe Culvert
- Footbridge
- Drainage Box: Catch Basin, DI or JB — CB
- Paved Ditch Gutter
- Storm Sewer Manhole — S
- Storm Sewer — S

UTILITIES:

** SUE - Subsurface Utility Engineering*
LOS - Level of Service - A,B,C or D (Accuracy)

POWER:

- Existing Power Pole
- Proposed Power Pole
- Existing Joint Use Pole
- Proposed Joint Use Pole
- Power Manhole — P
- Power Line Tower
- Power Transformer
- U/G Power Cable Hand Hole — HH
- H-Frame Pole
- U/G Power Line Test Hole (SUE - LOS A)*
- U/G Power Line (SUE - LOS B)* — P
- U/G Power Line (SUE - LOS C)* — P
- U/G Power Line (SUE - LOS D)* — P

TELEPHONE:

- Existing Telephone Pole
- Proposed Telephone Pole
- Telephone Manhole — T
- Telephone Pedestal — T
- Telephone Cell Tower
- U/G Telephone Cable Hand Hole — HH
- U/G Telephone Test Hole (SUE - LOS A)*
- U/G Telephone Cable (SUE - LOS B)* — T
- U/G Telephone Cable (SUE - LOS C)* — T
- U/G Telephone Cable (SUE - LOS D)* — T
- U/G Telephone Conduit (SUE - LOS B)* — TC
- U/G Telephone Conduit (SUE - LOS C)* — TC
- U/G Telephone Conduit (SUE - LOS D)* — TC
- U/G Fiber Optics Cable (SUE - LOS B)* — T FO
- U/G Fiber Optics Cable (SUE - LOS C)* — T FO
- U/G Fiber Optics Cable (SUE - LOS D)* — T FO

WATER:

- Water Manhole — W
- Water Meter
- Water Valve
- Water Hydrant
- U/G Water Line Test Hole (SUE - LOS A)*
- U/G Water Line (SUE - LOS B)* — W
- U/G Water Line (SUE - LOS C)* — W
- U/G Water Line (SUE - LOS D)* — W
- Above Ground Water Line — A/G Water

TV:

- TV Pedestal — C
- TV Tower
- U/G TV Cable Hand Hole — HH
- U/G TV Test Hole (SUE - LOS A)*
- U/G TV Cable (SUE - LOS B)* — TV
- U/G TV Cable (SUE - LOS C)* — TV
- U/G TV Cable (SUE - LOS D)* — TV
- U/G Fiber Optic Cable (SUE - LOS B)* — TV FO
- U/G Fiber Optic Cable (SUE - LOS C)* — TV FO
- U/G Fiber Optic Cable (SUE - LOS D)* — TV FO

GAS:

- Gas Valve
- Gas Meter
- U/G Gas Line Test Hole (SUE - LOS A)*
- U/G Gas Line (SUE - LOS B)* — G
- U/G Gas Line (SUE - LOS C)* — G
- U/G Gas Line (SUE - LOS D)* — G
- Above Ground Gas Line — A/G Gas

SANITARY SEWER:

- Sanitary Sewer Manhole
- Sanitary Sewer Cleanout
- U/G Sanitary Sewer Line — SS
- Above Ground Sanitary Sewer — A/G Sanitary Sewer
- SS Force Main Line Test Hole (SUE - LOS A)*
- SS Force Main Line (SUE - LOS B)* — FSS
- SS Force Main Line (SUE - LOS C)* — FSS
- SS Force Main Line (SUE - LOS D)* — FSS

MISCELLANEOUS:

- Utility Pole
- Utility Pole with Base
- Utility Located Object
- Utility Traffic Signal Box — S
- Utility Unknown U/G Line (SUE - LOS B)* — ?UTL
- U/G Tank; Water, Gas, Oil
- Underground Storage Tank, Approx. Loc. — UST
- A/G Tank; Water, Gas, Oil
- Geoenvironmental Boring
- Abandoned According to Utility Records — AATUR
- End of Information — E.O.I.

Docusign Envelope ID: 5BEC07C3-22DF-4939-99FC-60F4D2BB7B09

8/17/99

PROJECT REFERENCE NO.	SHEET NO.
U-3609B	2A-1

PAVEMENT SCHEDULE

(FINAL PAVEMENT DESIGN)

C1	PROP. APPROX. 3" ASPHALT CONCRETE SURFACE COURSE TYPE S9.5B, AT AN AVERAGE RATE OF 165 LBS. PER SQ. YD. IN EACH OF TWO LAYERS.	E1	PROP. APPROX. 4" ASPHALT CONCRETE BASE COURSE, TYPE B25.0C, AT AN AVERAGE RATE OF 456 LBS. PER SQ. YD.	S	4" CONCRETE SIDEWALK
C2	PROP. VAR. DEPTH ASPHALT CONCRETE SURFACE COURSE, TYPE S9.5B, AT AN AVERAGE RATE OF 110 LBS. PER SQ. YD. PER 1" DEPTH. TO BE PLACED IN LAYERS NOT LESS THAN 1" IN DEPTH OR GREATER THAN 1½" IN DEPTH.	E2	PROP. VAR. DEPTH ASPHALT CONCRETE BASE COURSE, TYPE B25.0C, AT AN AVERAGE RATE OF 114 LBS. PER SQ. YD. PER 1" DEPTH. TO BE PLACED IN LAYERS NOT LESS THAN 3" IN DEPTH OR GREATER THAN 5½" IN DEPTH.	T	EARTH MATERIAL
C3	PROP. APPROX. 3" ASPHALT CONCRETE SURFACE COURSE TYPE S9.5C, AT AN AVERAGE RATE OF 168 LBS. PER SQ. YD. IN EACH OF TWO LAYERS.	K	CLASS IV SUBGRADE STABILIZATION	U	EXISTING PAVEMENT
C4	PROP. VAR. DEPTH ASPHALT CONCRETE SURFACE COURSE, TYPE S9.5C, AT AN AVERAGE RATE OF 112 LBS. PER SQ. YD. PER 1" DEPTH. TO BE PLACED IN LAYERS NOT LESS THAN 1½" IN DEPTH OR GREATER THAN 2" IN DEPTH.	N	GEOTEXTILE FOR SUBGRADE STABILIZATION	V1	MILLING EXISTING PAVEMENT, 2.5"
D1	PROP. APPROX. 2.5" ASPHALT CONCRETE INTERMEDIATE COURSE, TYPE I19.0C, AT AN AVERAGE RATE OF 285 LBS. PER SQ. YD.	R1	1'-6" CONCRETE CURB AND GUTTER	V2	INCIDENTAL MILLING
D2	PROP. APPROX. 4" ASPHALT CONCRETE INTERMEDIATE COURSE, TYPE I19.0C, AT AN AVERAGE RATE OF 456 LBS. PER SQ. YD.	R2	2'-6" CONCRETE CURB AND GUTTER	W1	VARIABLE DEPTH ASPHALT PAVEMENT (SEE STANDARD WEDGING DETAILS)
D3	PROP. VAR. DEPTH ASPHALT CONCRETE INTERMEDIATE COURSE, TYPE I19.0C, AT AN AVERAGE RATE OF 114 LBS. PER SQ. YD. PER 1" DEPTH, TO BE PLACED IN LAYERS NOT LESS THAN 2½" IN DEPTH OR GREATER THAN 4" IN DEPTH.	R3	5" MONOLITHIC CONCRETE ISLAND (KEYED-IN)	W2	VARIABLE DEPTH ASPHALT PAVEMENT (SEE STANDARD WEDGING DETAILS)
		R4	8" x 12" CURB		

NOTE: PAVEMENT EDGE SLOPES ARE 1:1 UNLESS SHOWN OTHERWISE.

ROADWAY DESIGN ENGINEER

PAVEMENT DESIGN ENGINEER

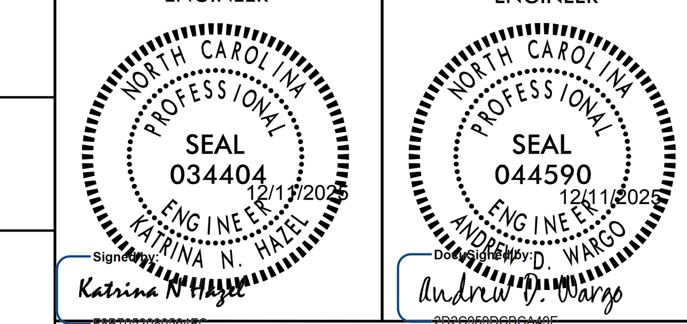

DOCUMENT NOT CONSIDERED FINAL UNLESS ALL SIGNATURES COMPLETED

Stantec
Stantec Consulting Services Inc.
801 Jones Franklin Road
Suite 300
Raleigh, NC 27606
Tel. (919) 851-6866
Fax. (919) 851-7024
www.stantec.com
License No. F-0672

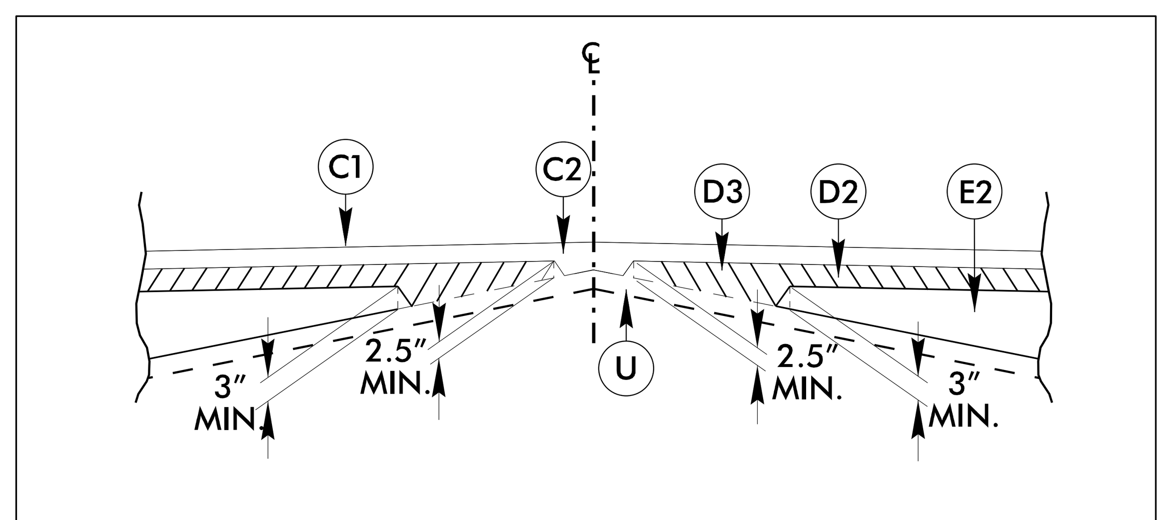

W1: WEDGING DETAIL FOR WEDGING

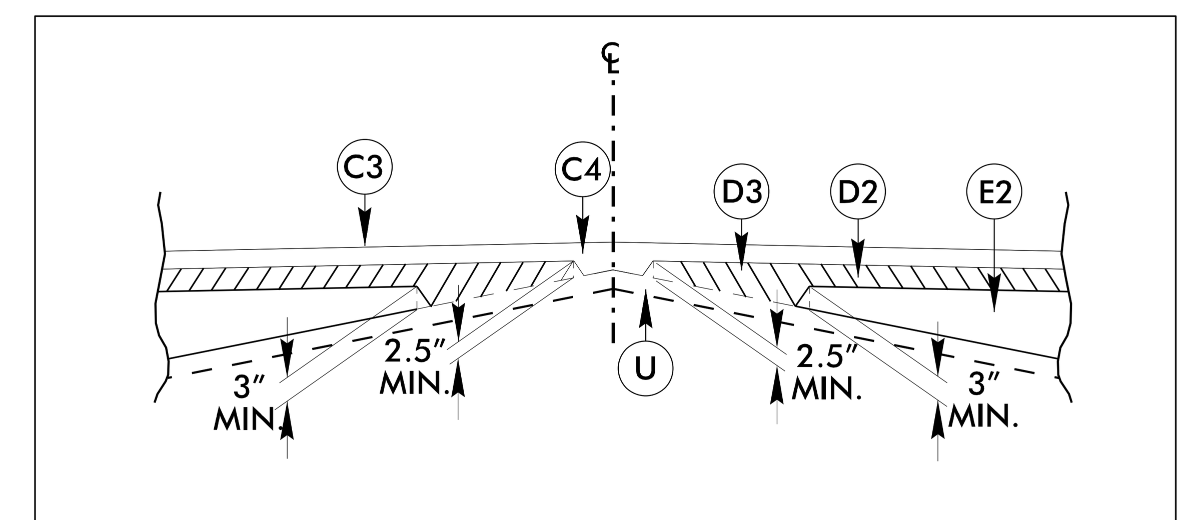

W2: WEDGING DETAIL FOR WEDGING

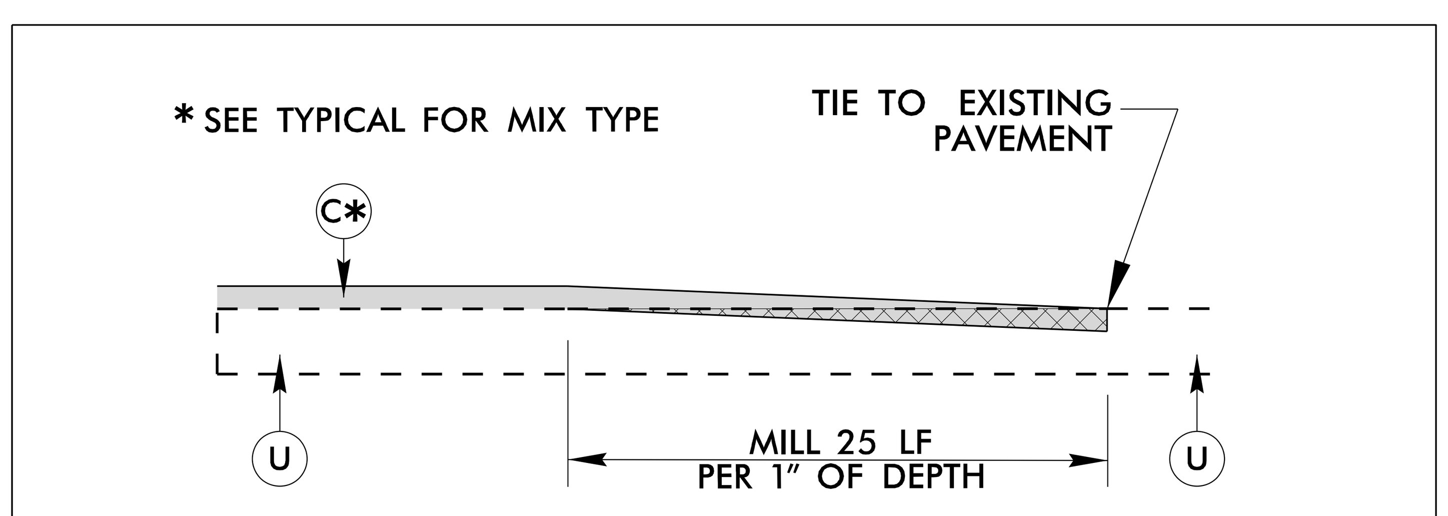

INCIDENTAL TIE-IN MILLING DETAIL FOR OVERLAY (PROFILE VIEW)

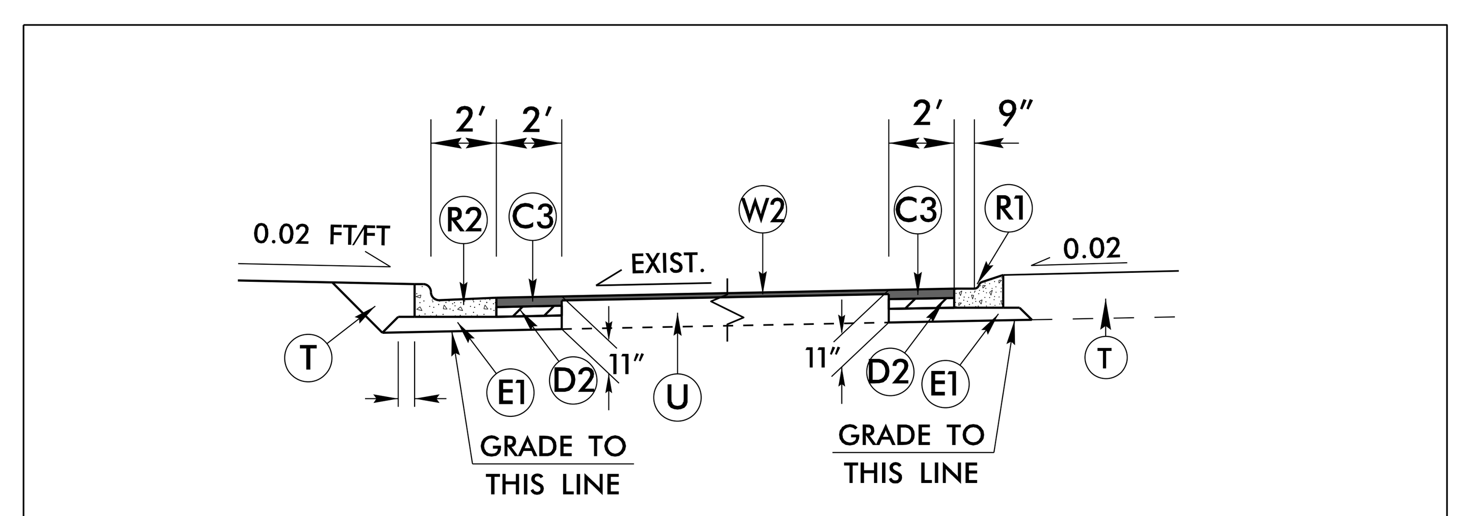

SAWCUT DETAIL: SAWCUT EXISTING PAVEMENT 2' FROM PROPOSED C&G AND INSTALL AS SHOWN

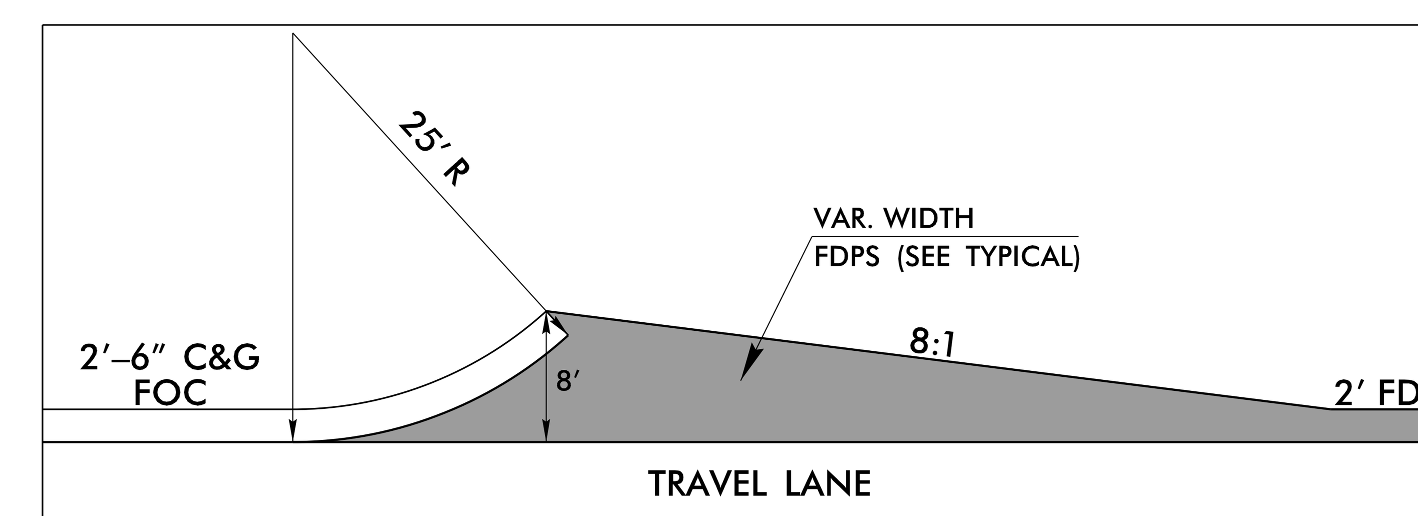

DETAIL SHOWING CURB AND GUTTER FLARE

12/11/2025
...\Roadway\Proj\U3609B_rdy_typ.dgn

Docusign Envelope ID: 5BEC07C3-22DF-4939-99FC-60F4D2BB7B09

8/17/99

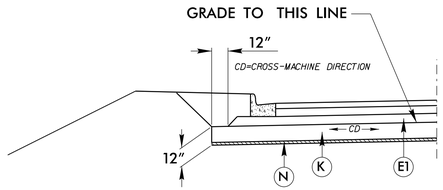

AGGREGATE SUBGRADE FOR CG WITH ASPHALT BASE

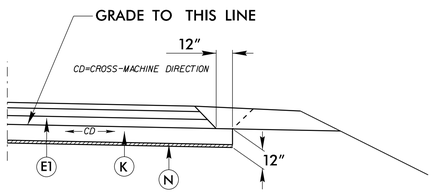

AGGREGATE SUBGRADE FOR SHOULDER WITH ASPHALT BASE

DETAIL FOR SHALLOW UNDERCUT

–L– STA. 66+75.00 TO 67+25.00
–L– STA. 74+50.00 TO 75+75.00
–L– STA. 77+00.00 TO 79+50.00
–L– STA. 89+75.00 TO 91+50.00
–L– STA. 119+25.00 TO 122+25
–Y10– STA. 10+90.00 TO 14+00.00

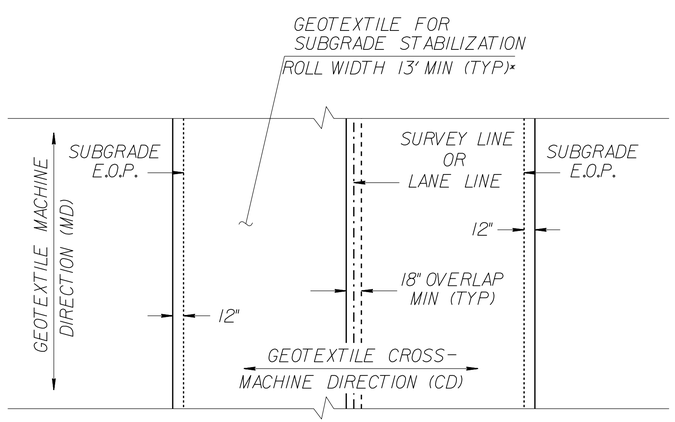

GEOTEXTILE FOR SUBGRADE STABILIZATION PLACEMENT
(PLAN VIEW)

(100% COVERAGE REQUIRED)

*INSTALL GEOTEXTILE FOR SUBGRADE STABILIZATION WITH MINIMUM ROLL WIDTH UNDER ROADWAY EDGES AND SHOULDERS ADJACENT TO FILL SLOPES

TRANSITION FROM EXISTING TO TYPICAL SECTION No. 1

–L– STA. 14+05.00 TO 16+20.00

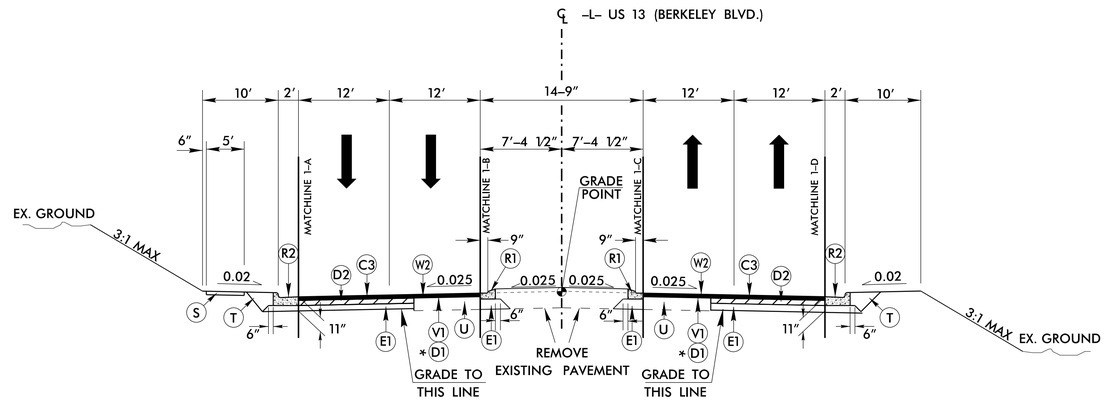

TYPICAL SECTION No. 1

–L– STA. 16+20.00 TO 21+95.00

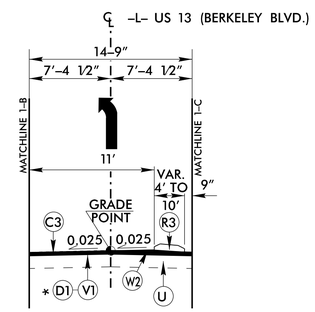

PARTIAL TYPICAL 1–A

–L– STA. 16+20.00 TO 21+63.29

Stantec

Stantec Consulting Services Inc.
801 Jones Franklin Road
Suite 300
Raleigh, NC 27606
Tel. (919) 851-6866
Fax. (919) 851-7024
www.stantec.com
License No. F-0672

PROJECT REFERENCE NO.	SHEET NO.
U-3609B	2A-2

ROADWAY DESIGN ENGINEER	PAVEMENT DESIGN ENGINEER
NORTH CAROLINA PROFESSIONAL SEAL 034404 ENGINEER KATRINA N. HAGEL 12/17/2025	NORTH CAROLINA PROFESSIONAL SEAL 044590 ENGINEER ANDREW G. WARGO 12/17/2025
Signature: Katrina N Hagel	Signature: Andrew G. Wargo

DOCUMENT NOT CONSIDERED FINAL UNLESS ALL SIGNATURES COMPLETED

PAVEMENT DESIGN	
C1	PROP. APPROX. 3", TYPE S9.5B
C2	PROP. VAR. DEPTH, TYPE S9.5B
C3	PROP. APPROX. 3", TYPE S9.5C
C4	PROP. VAR. DEPTH, TYPE S9.5C
D1	PROP. APPROX. 2.5", TYPE I19.0C
D2	PROP. APPROX. 4", TYPE I19.0C
D3	PROP. VAR. DEPTH, TYPE I19.0C
E1	PROP. APPROX. 4", TYPE B25.0C
E2	PROP. VAR. DEPTH, TYPE B25.0C
K	CLASS IV SUBGRADE STABILIZATION
N	GEOTEXTILE FOR SUBGRADE STABILIZATION
R1	1'-6" CONCRETE CURB AND GUTTER
R2	2'-6" CONCRETE CURB AND GUTTER
R3	5" MONOLITHIC CONCRETE ISLAND (KEYED-IN)
R4	8" x 12" CURB
S	4" CONCRETE SIDEWALK
T	EARTH MATERIAL
U	EXISTING PAVEMENT
V1	MILL EXIST. PAVEMENT 2.5"
V2	INCIDENTAL MILLING
W1	VARIABLE DEPTH ASPHALT PAVEMENT (SEE STANDARD WEDGING DETAILS SHEET NO.2A-1)
W2	VARIABLE DEPTH ASPHALT PAVEMENT (SEE STANDARD WEDGING DETAILS SHEET NO.2A-1)

NOTE: PAVEMENT EDGE SLOPES ARE 1:1 UNLESS SHOWN OTHERWISE.

* NOTE: AFTER MILLING SEE JOINT REPAIR DETAIL SHEET 2B–4

Docusign Envelope ID: 5BEC07C3-22DF-4939-99FC-60F4D2BB7B09

8/17/99

Stantec

Stantec Consulting Services Inc.
801 Jones Franklin Road
Suite 300
Raleigh, NC 27606
Tel. (919) 851-6866
Fax. (919) 851-7024
www.stantec.com
License No. F-0672

PROJECT REFERENCE NO.	SHEET NO.
U-3609B	2A-3

ROADWAY DESIGN ENGINEER	PAVEMENT DESIGN ENGINEER
NORTH CAROLINA PROFESSIONAL SEAL 034404 ENGINEER KATRINA N. HAGEL 12/13/2024	NORTH CAROLINA PROFESSIONAL SEAL 044590 ENGINEER ANDREW J. WARGO 12/13/2024
Signature: Katrina N Hagel	Signature: Andrew J. Wargo

DOCUMENT NOT CONSIDERED FINAL UNLESS ALL SIGNATURES COMPLETED

TRANSITION FROM TYPICAL SECTION No. 1 TO TYPICAL SECTION No. 2

–L– STA. 21+95.00 TO 23+45.00

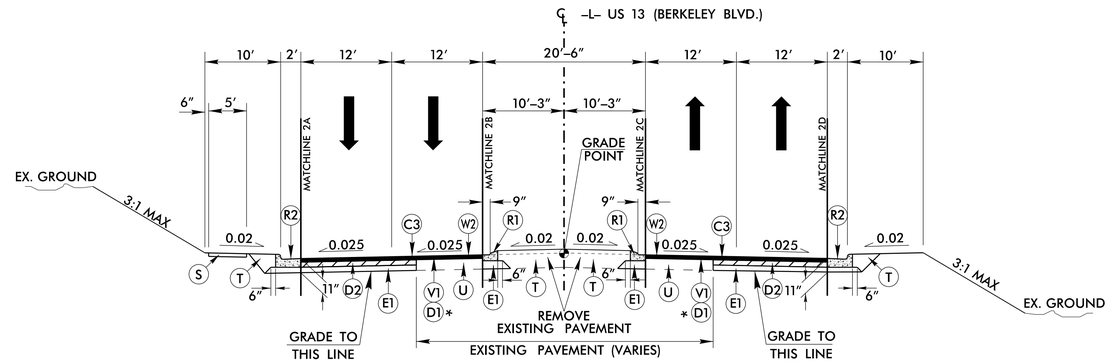

TYPICAL SECTION No. 2

–L– STA. 23+45.00 TO 68+45.00

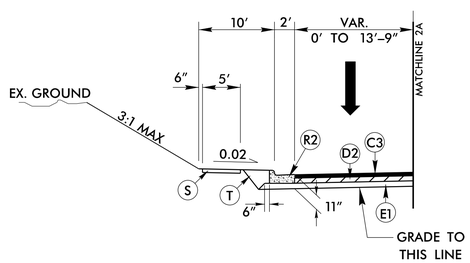

PARTIAL TYPICAL 2A

–L– STA. 43+63.00 TO 45+42.67
–L– STA. 67+76.00 TO 69+12.00

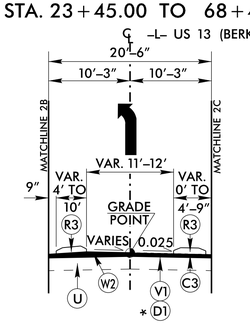

PARTIAL TYPICAL 2B

–L– STA. 25+29.00 TO 30+19.81
–L– STA. 31+30.72 TO 36+21.00 (MIRRORED)
–L– STA. 40+59.00 TO 45+44.00
–L– STA. 45+44.00 TO 50+36.00 (MIRRORED)
–L– STA. 54+54.00 TO 59+50.30
–L– STA. 59+50.30 TO 65+42.00 (MIRRORED)
–L– STA. 65+42.00 TO 70+04.00

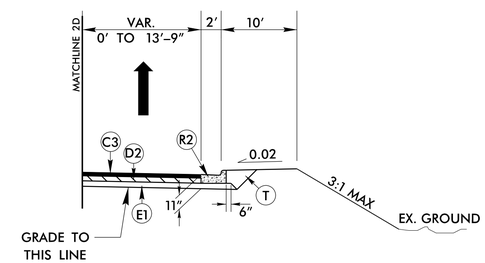

PARTIAL TYPICAL 2C

–L– STA. 45+52.86 TO 47+34.13

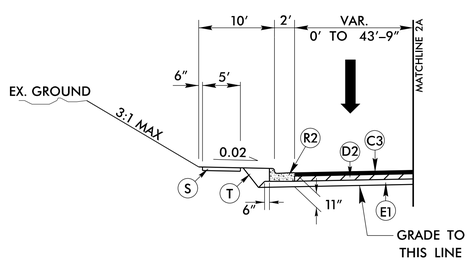

PARTIAL TYPICAL 2D

–L– STA. 57+61.23 TO 59+61.89

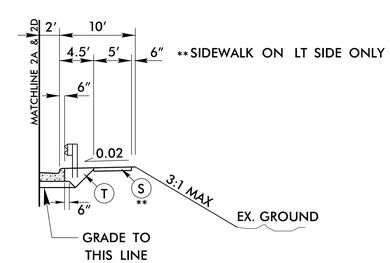

PARTIAL TYPICAL 2E

–L– STA. 53+10.00 TO 55+42.00 RT
–L– STA. 54+95.00 TO 57+25.00 LT

PAVEMENT DESIGN	
C1	PROP. APPROX. 3″, TYPE S9.5B
C2	PROP. VAR. DEPTH, TYPE S9.5B
C3	PROP. APPROX. 3″, TYPE S9.5C
C4	PROP. VAR. DEPTH, TYPE S9.5C
D1	PROP. APPROX. 2.5″, TYPE I19.0C
D2	PROP. APPROX. 4″, TYPE I19.0C
D3	PROP. VAR. DEPTH, TYPE I19.0C
E1	PROP. APPROX. 4″, TYPE B25.0C
E2	PROP. VAR. DEPTH, TYPE B25.0C
K	CLASS IV SUBGRADE STABILIZATION
N	GEOTEXTILE FOR SUBGRADE STABILIZATION
R1	1′-6″ CONCRETE CURB AND GUTTER
R2	2′-6″ CONCRETE CURB AND GUTTER
R3	5″ MONOLITHIC CONCRETE ISLAND (KEYED-IN)
R4	8″ x 12″ CURB
S	4″ CONCRETE SIDEWALK
T	EARTH MATERIAL
U	EXISTING PAVEMENT
V1	MILL EXIST. PAVEMENT 2.5″
V2	INCIDENTAL MILLING
W1	VARIABLE DEPTH ASPHALT PAVEMENT (SEE STANDARD WEDGING DETAILS SHEET NO.2A-1)
W2	VARIABLE DEPTH ASPHALT PAVEMENT (SEE STANDARD WEDGING DETAILS SHEET NO.2A-1)

NOTE: PAVEMENT EDGE SLOPES ARE 1:1 UNLESS SHOWN OTHERWISE.

TRANSITION FROM TYPICAL SECTION No. 2 TO TYPICAL SECTION No. 3

–L– STA. 68+45.00 TO 69+20.00

* NOTE: AFTER MILLING SEE JOINT REPAIR DETAIL SHEET 2B–4

Docusign Envelope ID: 5BEC07C3-22DF-4939-99FC-60F4D2BB7B09

8/17/99

Stantec

Stantec Consulting Services Inc.
801 Jones Franklin Road
Suite 300
Raleigh, NC 27606
Tel. (919) 851-6866
Fax. (919) 851-7024
www.stantec.com
License No. F-0672

PROJECT REFERENCE NO.	SHEET NO.
U-3609B	2A-4

ROADWAY DESIGN ENGINEER	PAVEMENT DESIGN ENGINEER
NORTH CAROLINA PROFESSIONAL SEAL 034404 ENGINEER KATRINA N. HAGEL 12/17/2025	NORTH CAROLINA PROFESSIONAL SEAL 044590 ENGINEER ANDREW G. WARGO 12/17/2025
Signature: Katrina N Hagel	Signature: Andrew G. Wargo

DOCUMENT NOT CONSIDERED FINAL UNLESS ALL SIGNATURES COMPLETED

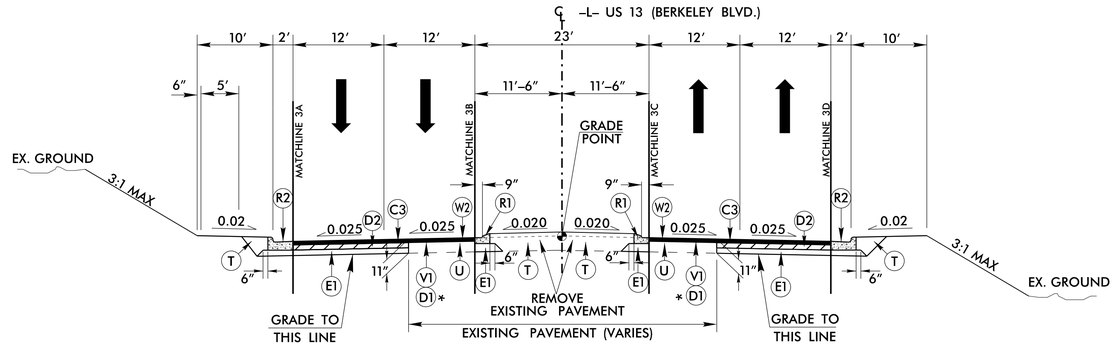

TYPICAL SECTION No. 3

–L– STA. 69+20.00 TO 120+85.00

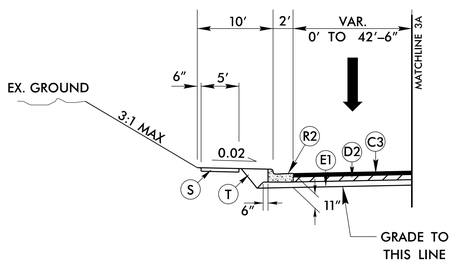

PARTIAL TYPICAL 3A

–L– STA. 87+10.97 TO 89+32.88
–L– STA. 101+47.58 TO 102+34.82
–L– STA. 120+05.11 TO 121+75.89

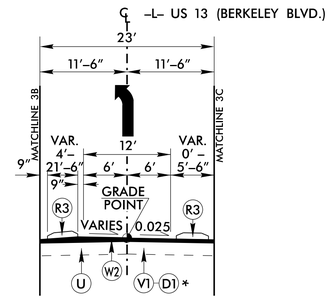

PARTIAL TYPICAL 3B

–L– STA. 70+04.00 TO 74+78.00
–L– STA. 76+04.00 TO 80+11.25 (MIRRORED)
–L– STA. 84+93.00 TO 89+29.25
–L– STA. 89+29.25 TO 93+06.28 (MIRRORED)
–L– STA. 98+43.35 TO 102+95.00
–L– STA. 108+94.81 TO 113+20.00 (MIRRORED)
–L– STA. 117+51.75 TO 125+00.00

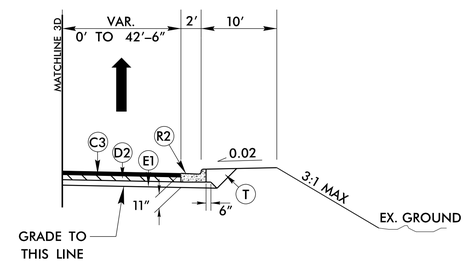

PARTIAL TYPICAL 3C

–L– STA. 89+16.87 TO 91+48.21

	PAVEMENT DESIGN
C1	PROP. APPROX. 3″, TYPE S9.5B
C2	PROP. VAR. DEPTH, TYPE S9.5B
C3	PROP. APPROX. 3″, TYPE S9.5C
C4	PROP. VAR. DEPTH, TYPE S9.5C
D1	PROP. APPROX. 2.5″, TYPE I19.0C
D2	PROP. APPROX. 4″, TYPE I19.0C
D3	PROP. VAR. DEPTH, TYPE I19.0C
E1	PROP. APPROX. 4″, TYPE B25.0C
E2	PROP. VAR. DEPTH, TYPE B25.0C
K	CLASS IV SUBGRADE STABILIZATION
N	GEOTEXTILE FOR SUBGRADE STABILIZATION
R1	1′-6″ CONCRETE CURB AND GUTTER
R2	2′-6″ CONCRETE CURB AND GUTTER
R3	5″ MONOLITHIC CONCRETE ISLAND (KEYED-IN)
R4	8″ x 12″ CURB
S	4″ CONCRETE SIDEWALK
T	EARTH MATERIAL
U	EXISTING PAVEMENT
V1	MILL EXIST. PAVEMENT 2.5″
V2	INCIDENTAL MILLING
W1	VARIABLE DEPTH ASPHALT PAVEMENT (SEE STANDARD WEDGING DETAILS SHEET NO.2A-1)
W2	VARIABLE DEPTH ASPHALT PAVEMENT (SEE STANDARD WEDGING DETAILS SHEET NO.2A-1)

NOTE: PAVEMENT EDGE SLOPES ARE 1:1 UNLESS SHOWN OTHERWISE.

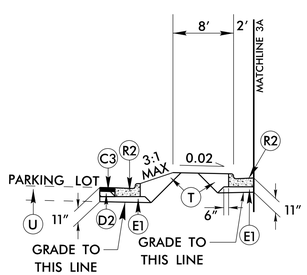

PARTIAL TYPICAL 3D

–L– STA. 101+00 TO 102+26.05
SEE SAWCUT DETAIL SHEET 2A–1

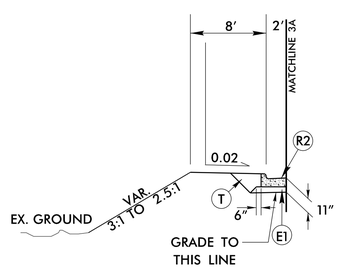

PARTIAL TYPICAL 3E

–L– STA. 79+25.00 TO 83+00.00

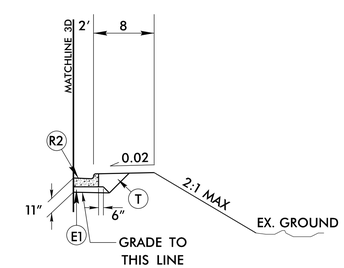

PARTIAL TYPICAL 3F

–L– STA. 104+00 TO 111+50

TRANSITION FROM TYPICAL SECTION No. 3 TO EXISTING

–L– STA. 120+85.00 TO 125+00.00

* NOTE: AFTER MILLING SEE JOINT REPAIR DETAIL SHEET 2B–4

Docusign Envelope ID: 5BEC07C3-22DF-4939-99FC-60F4D2BB7B09

8/17/99

Stantec

Stantec Consulting Services Inc.
801 Jones Franklin Road
Suite 300
Raleigh, NC 27606
Tel. (919) 851-6866
Fax. (919) 851-7024
www.stantec.com
License No. F-0672

PROJECT REFERENCE NO.	SHEET NO.
U-3609B	2A-5

ROADWAY DESIGN ENGINEER	PAVEMENT DESIGN ENGINEER
NORTH CAROLINA PROFESSIONAL ENGINEER SEAL 034404 KATRINA N. HAZEL 12/17/2024	NORTH CAROLINA PROFESSIONAL ENGINEER SEAL 044590 ANDREW D. WARGO 12/11/2024

DOCUMENT NOT CONSIDERED FINAL UNLESS ALL SIGNATURES COMPLETED

TRANSITION FROM EXISTING TO TYPICAL SECTION No. 4

-Y1- STA. 10+45.00 TO 12+55.00

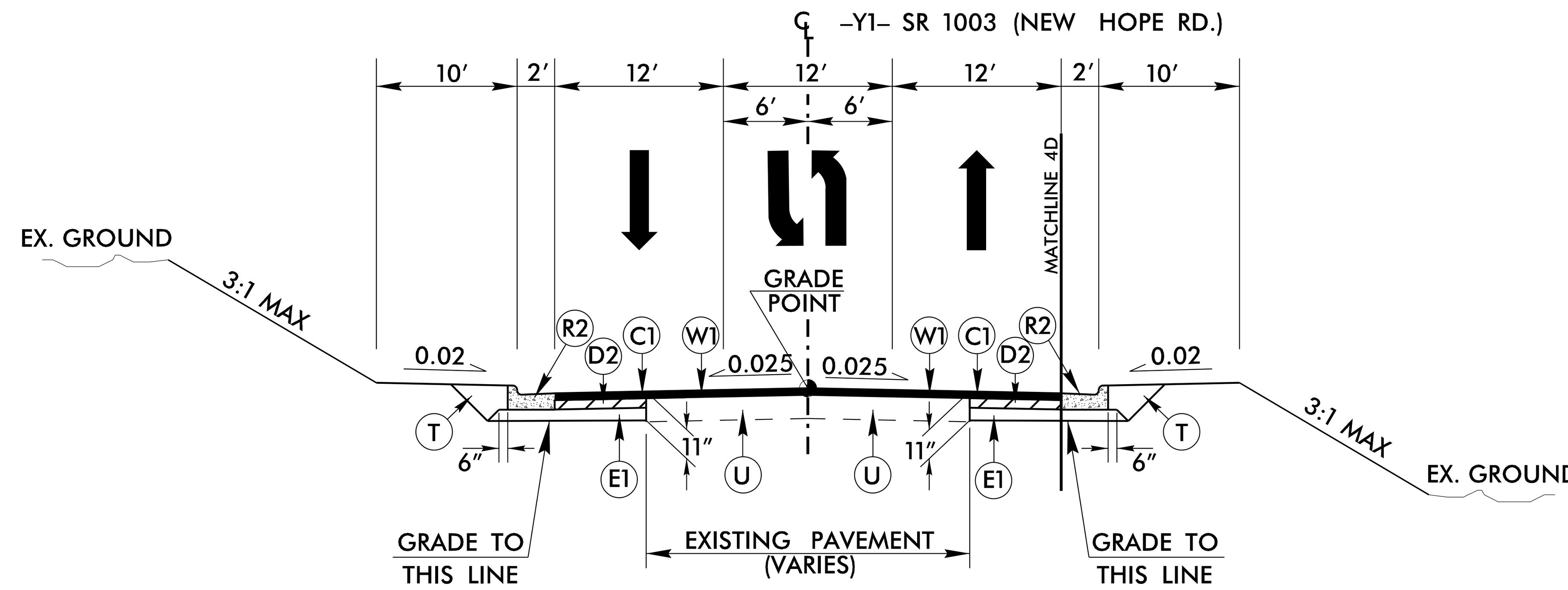

TYPICAL SECTION No. 4

-Y1- STA. 12+55.00 TO 21+76.85

TRANSITION FROM TYPICAL SECTION No. 4 TO EXISTING

-Y1- STA. 21+76.85 TO 23+50.00

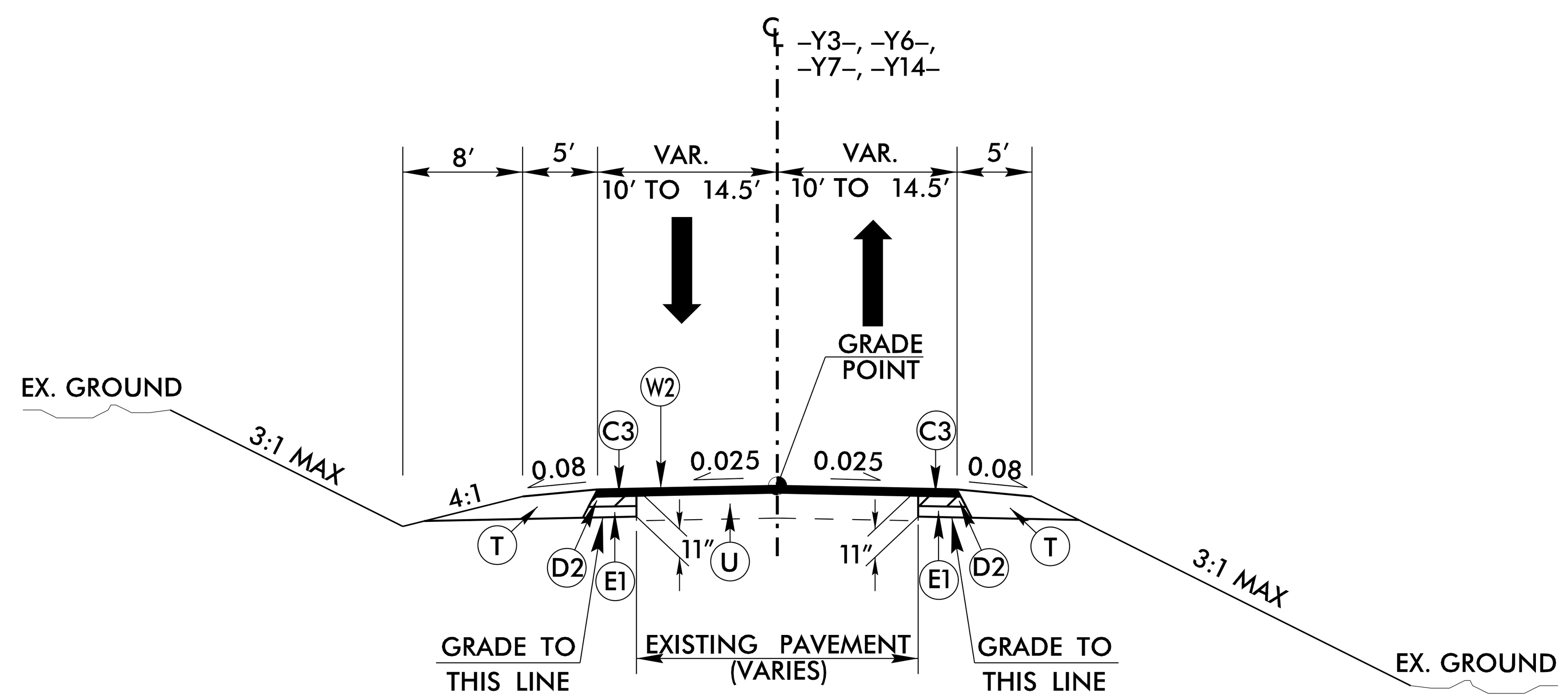

TYPICAL SECTION No. 5

-Y3- STA. 11+70.00 TO 12+69.62
-Y6- STA. 10+34.25 TO 11+60.00
-Y7- STA. 12+10.00 TO 12+65.75
-Y14- STA. 10+70.00 TO 11+59.06

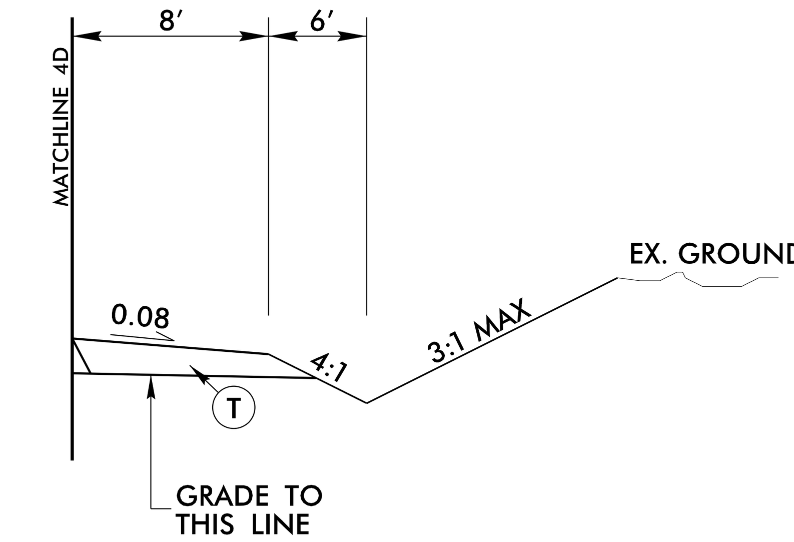

PARTIAL TYPICAL 4A

-Y1- STA. 10+45.00 TO 10+95.00 LT
-Y1- STA. 10+45.00 TO 10+95.00 RT

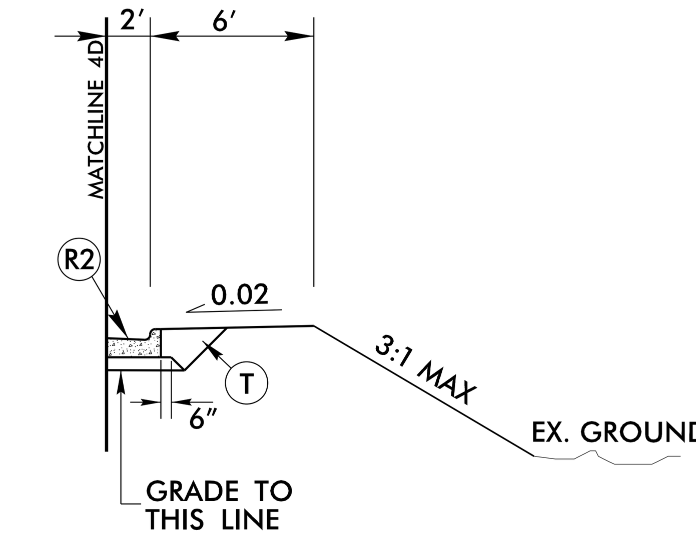

PARTIAL TYPICAL 4B

-Y1- STA. 10+95.00 TO 13+68.00 RT
-Y1- STA. 18+01.43 TO 20+68.00 RT

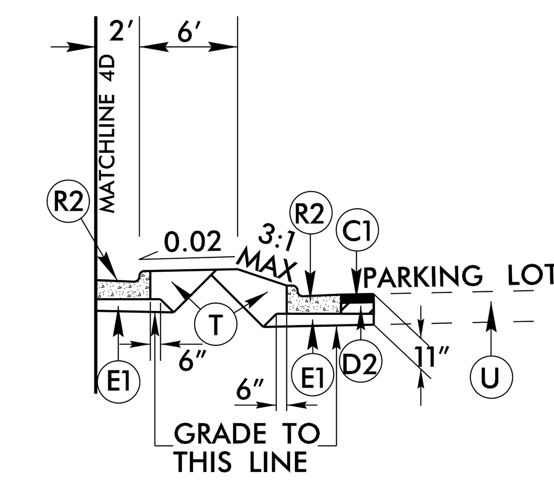

PARTIAL TYPICAL 4C

-Y1- STA. 13+68.00 TO 18+01.43 RT
SEE SAWCUT DETAIL SHEET 2A-1

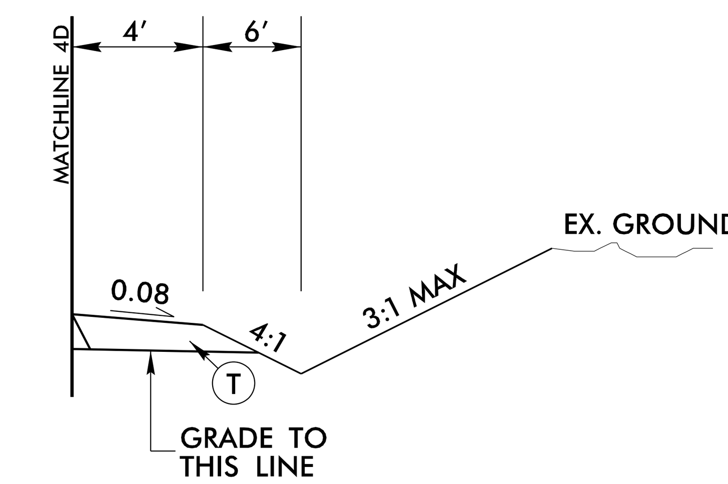

PARTIAL TYPICAL 4D

-Y1- STA. 20+68.00 TO 23+50.00 RT

PAVEMENT DESIGN	
C1	PROP. APPROX. 3", TYPE S9.5B
C2	PROP. VAR. DEPTH, TYPE S9.5B
C3	PROP. APPROX. 3", TYPE S9.5C
C4	PROP. VAR. DEPTH, TYPE S9.5C
D1	PROP. APPROX. 2.5", TYPE I19.0C
D2	PROP. APPROX. 4", TYPE I19.0C
D3	PROP. VAR. DEPTH, TYPE I19.0C
E1	PROP. APPROX. 4", TYPE B25.0C
E2	PROP. VAR. DEPTH, TYPE B25.0C
K	CLASS IV SUBGRADE STABILIZATION
N	GEOTEXTILE FOR SUBGRADE STABILIZATION
R1	1'-6" CONCRETE CURB AND GUTTER
R2	2'-6" CONCRETE CURB AND GUTTER
R3	5" MONOLITHIC CONCRETE ISLAND (KEYED-IN)
R4	8" x 12" CURB
S	4" CONCRETE SIDEWALK
T	EARTH MATERIAL
U	EXISTING PAVEMENT
V1	MILL EXIST. PAVEMENT 2.5"
V2	INCIDENTAL MILLING
W1	VARIABLE DEPTH ASPHALT PAVEMENT (SEE STANDARD WEDGING DETAILS SHEET NO.2A-1)
W2	VARIABLE DEPTH ASPHALT PAVEMENT (SEE STANDARD WEDGING DETAILS SHEET NO.2A-1)

NOTE: PAVEMENT EDGE SLOPES ARE 1:1 UNLESS SHOWN OTHERWISE.

Docusign Envelope ID: 5BEC07C3-22DF-4939-99FC-60F4D2BB7B09

8/17/99

Stantec

Stantec Consulting Services Inc.
801 Jones Franklin Road
Suite 300
Raleigh, NC 27606
Tel. (919) 851-6866
Fax. (919) 851-7024
www.stantec.com
License No. F-0672

PROJECT REFERENCE NO.	SHEET NO.
U-3609B	2A-6

ROADWAY DESIGN ENGINEER	PAVEMENT DESIGN ENGINEER
NORTH CAROLINA PROFESSIONAL SEAL 034404 ENGINEER KATRINA N. HAGEL 12/17/2025	NORTH CAROLINA PROFESSIONAL SEAL 044590 ENGINEER ANDREW T. WARGO 12/17/2025
Signature: Katrina N Hagel	Signature: Andrew T. Wargo

DOCUMENT NOT CONSIDERED FINAL UNLESS ALL SIGNATURES COMPLETED

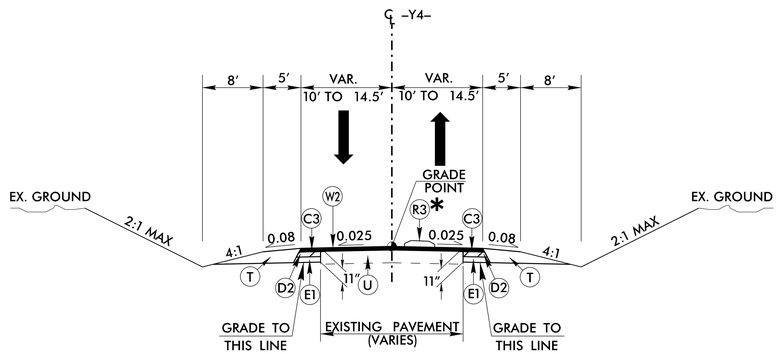

*SEE PLANS FOR MONOLITHIC ISLAND ON -Y4-

TYPICAL SECTION No. 6

-Y4- STA. 11+70.00 TO 12+65.75

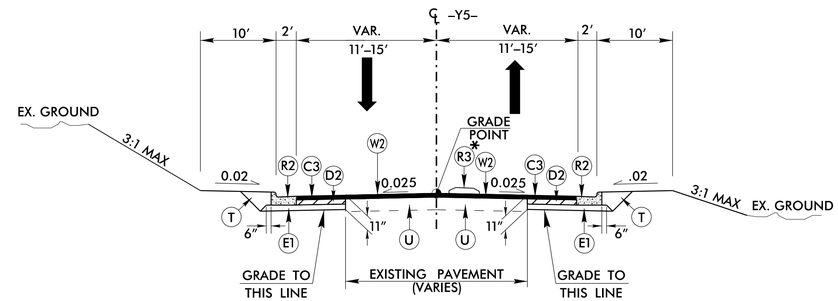

TYPICAL SECTION No. 7

-Y5- STA. 10+34.25 TO 11+20.00

*SEE PLANS FOR MONOLITHIC ISLAND ON -Y5-

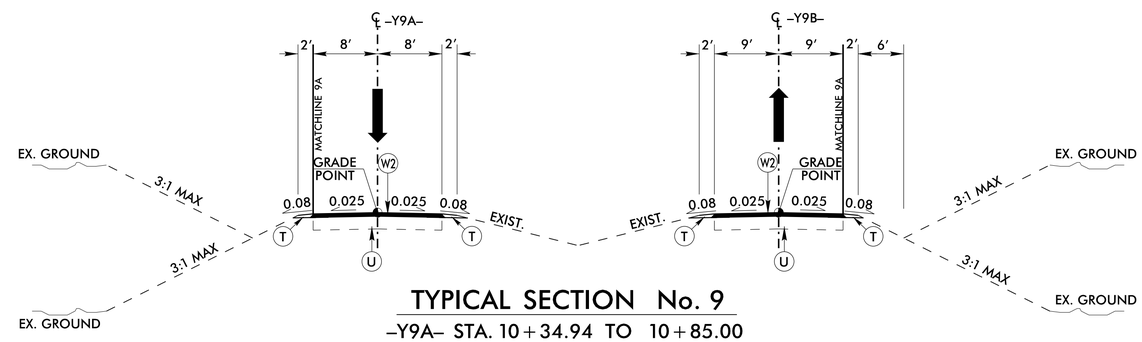

TYPICAL SECTION No. 9

-Y9A- STA. 10+34.94 TO 10+85.00

-Y9B- STA. 10+35.52 TO 11+00.00

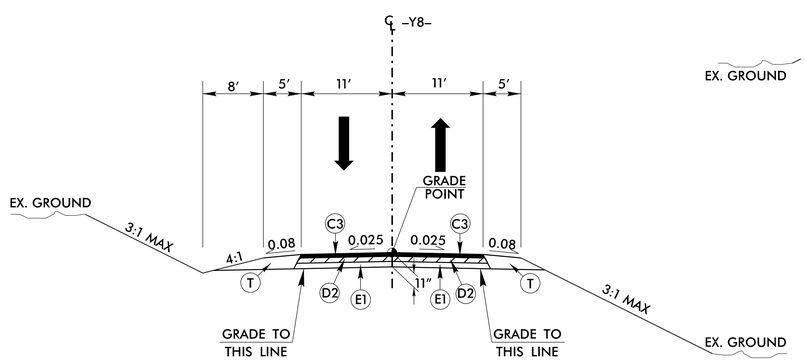

TYPICAL SECTION No. 8

-Y8- STA. 11+50.00 TO 12+65.75

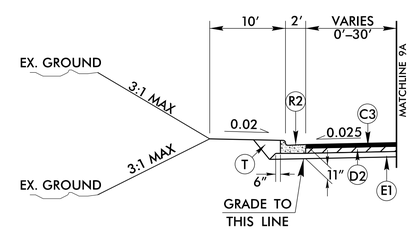

PARTIAL TYPICAL SECTION No. 9A

-Y9A- STA. 10+34.94 TO 10+75.14 RT

-Y9B- STA. 10+35.52 TO 10+45.00 LT

PAVEMENT DESIGN	
C1	PROP. APPROX. 3″, TYPE S9.5B
C2	PROP. VAR. DEPTH, TYPE S9.5B
C3	PROP. APPROX. 3″, TYPE S9.5C
C4	PROP. VAR. DEPTH, TYPE S9.5C
D1	PROP. APPROX. 2.5″, TYPE I19.0C
D2	PROP. APPROX. 4″, TYPE I19.0C
D3	PROP. VAR. DEPTH, TYPE I19.0C
E1	PROP. APPROX. 4″, TYPE B25.0C
E2	PROP. VAR. DEPTH, TYPE B25.0C
K	CLASS IV SUBGRADE STABILIZATION
N	GEOTEXTILE FOR SUBGRADE STABILIZATION
R1	1′-6″ CONCRETE CURB AND GUTTER
R2	2′-6″ CONCRETE CURB AND GUTTER
R3	5″ MONOLITHIC CONCRETE ISLAND (KEYED-IN)
R4	8″ x 12″ CURB
S	4″ CONCRETE SIDEWALK
T	EARTH MATERIAL
U	EXISTING PAVEMENT
V1	MILL EXIST. PAVEMENT 2.5″
V2	INCIDENTAL MILLING
W1	VARIABLE DEPTH ASPHALT PAVEMENT (SEE STANDARD WEDGING DETAILS SHEET NO.2A-1)
W2	VARIABLE DEPTH ASPHALT PAVEMENT (SEE STANDARD WEDGING DETAILS SHEET NO.2A-1)

NOTE: PAVEMENT EDGE SLOPES ARE 1:1 UNLESS SHOWN OTHERWISE.

Docusign Envelope ID: 5BEC07C3-22DF-4939-99FC-60F4D2BB7B09

8/17/99

Stantec

Stantec Consulting Services Inc.
801 Jones Franklin Road
Suite 300
Raleigh, NC 27606
Tel. (919) 851-6866
Fax. (919) 851-7024
www.stantec.com
License No. F-0672

PROJECT REFERENCE NO.	SHEET NO.
U-3609B	2A-7

ROADWAY DESIGN ENGINEER	PAVEMENT DESIGN ENGINEER
NORTH CAROLINA PROFESSIONAL SEAL 034404 ENGINEER KATRINA N. HAGEL 12/17/2025	NORTH CAROLINA PROFESSIONAL SEAL 044590 ENGINEER ANDREW J. WARGO 12/17/2025
Signature: Katrina N Hagel	Signature: Andrew J. Wargo

DOCUMENT NOT CONSIDERED FINAL UNLESS ALL SIGNATURES COMPLETED

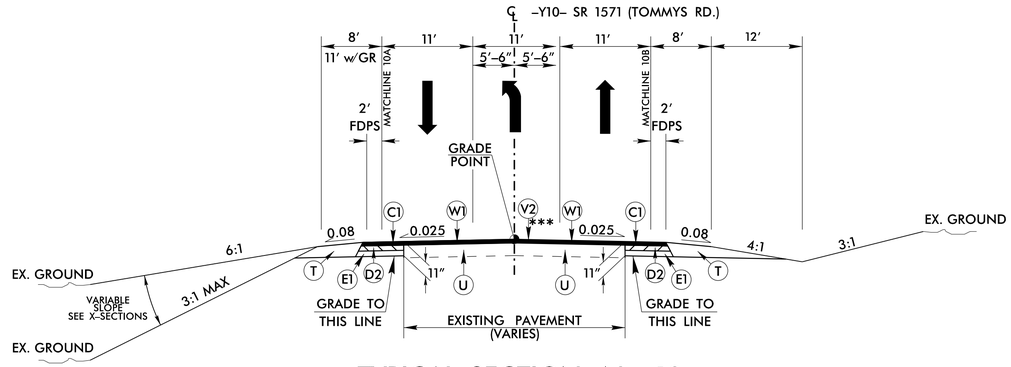

TYPICAL SECTION No. 10

–Y10– STA. 10+90.00 TO 13+60.16

***NOTE:

INCIDENTAL MILLING TO FIX CROWN OF ROADWAY FROM –Y10– STA. 12+64.00 TO 13+36.16

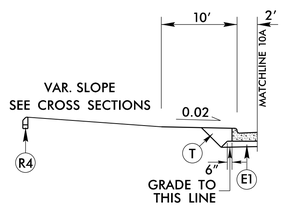

PARTIAL TYPICAL SECTION No. 10A

–Y10– STA. 12+91.92 TO 13+60.16

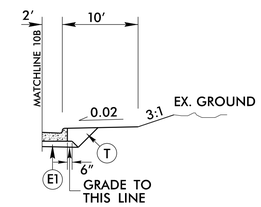

PARTIAL TYPICAL SECTION No. 10B

–Y10– STA. 12+71.72 TO 13+60.16

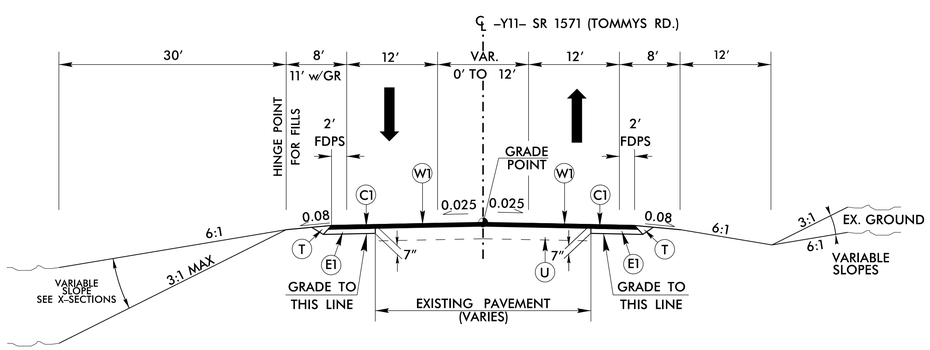

TYPICAL SECTION No. 11

–Y11– STA. 10+39.84 TO 14+25.00

–Y11– STA. 24+40.00 TO 28+00.00

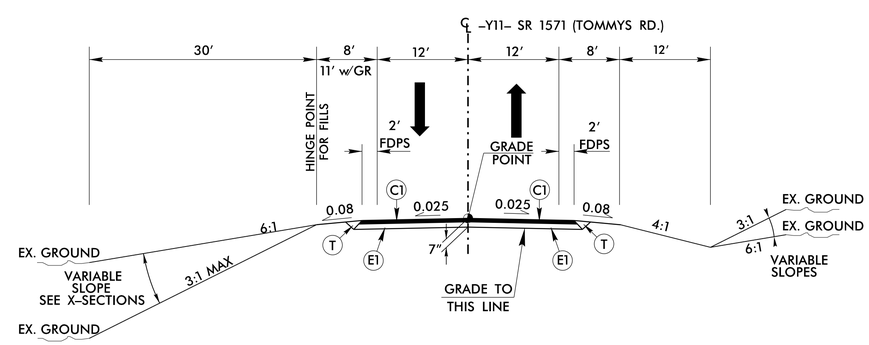

TYPICAL SECTION No. 12

–Y11– STA. 14+25.00 TO 24+40.00

PAVEMENT DESIGN	
C1	PROP. APPROX. 3″, TYPE S9.5B
C2	PROP. VAR. DEPTH, TYPE S9.5B
C3	PROP. APPROX. 3″, TYPE S9.5C
C4	PROP. VAR. DEPTH, TYPE S9.5C
D1	PROP. APPROX. 2.5″, TYPE I19.0C
D2	PROP. APPROX. 4″, TYPE I19.0C
D3	PROP. VAR. DEPTH, TYPE I19.0C
E1	PROP. APPROX. 4″, TYPE B25.0C
E2	PROP. VAR. DEPTH, TYPE B25.0C
K	CLASS IV SUBGRADE STABILIZATION
N	GEOTEXTILE FOR SUBGRADE STABILIZATION
R1	1′-6″ CONCRETE CURB AND GUTTER
R2	2′-6″ CONCRETE CURB AND GUTTER
R3	5″ MONOLITHIC CONCRETE ISLAND (KEYED-IN)
R4	8″ x 12″ CURB
S	4″ CONCRETE SIDEWALK
T	EARTH MATERIAL
U	EXISTING PAVEMENT
V1	MILL EXIST. PAVEMENT 2.5″
V2	INCIDENTAL MILLING
W1	VARIABLE DEPTH ASPHALT PAVEMENT (SEE STANDARD WEDGING DETAILS SHEET NO.2A-1)
W2	VARIABLE DEPTH ASPHALT PAVEMENT (SEE STANDARD WEDGING DETAILS SHEET NO.2A-1)

NOTE: PAVEMENT EDGE SLOPES ARE 1:1 UNLESS SHOWN OTHERWISE.

Docusign Envelope ID: 5BEC07C3-22DF-4939-99FC-60F4D2BB7B09

8/17/99

Stantec

Stantec Consulting Services Inc.
801 Jones Franklin Road
Suite 300
Raleigh, NC 27606
Tel. (919) 851-6866
Fax. (919) 851-7024
www.stantec.com
License No. F-0672

PROJECT REFERENCE NO.	SHEET NO.
U-3609B	2A-8

ROADWAY DESIGN ENGINEER	PAVEMENT DESIGN ENGINEER
NORTH CAROLINA PROFESSIONAL SEAL 034404 ENGINEER KATRINA N. HAGEL 12/17/2025	NORTH CAROLINA PROFESSIONAL SEAL 044590 ENGINEER ANDREW J. WARGO 12/17/2025
Signature: Katrina N Hagel	Signature: Andrew J. Wargo

DOCUMENT NOT CONSIDERED FINAL UNLESS ALL SIGNATURES COMPLETED

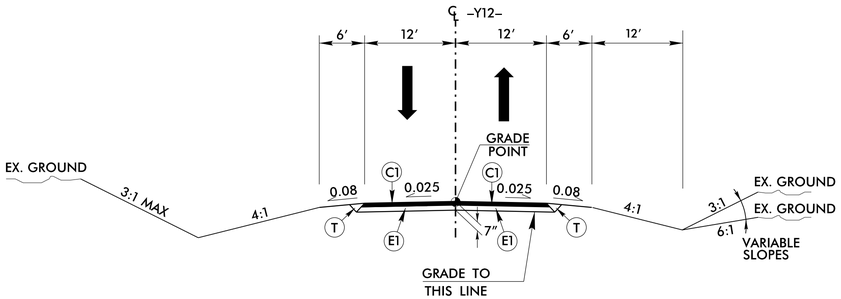

TYPICAL SECTION No. 13

-Y12- STA. 10+12.02 TO 11+84.51

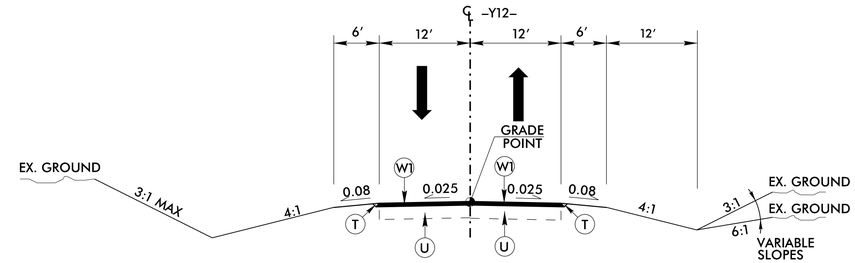

TYPICAL SECTION No. 14

-Y12- STA. 11+84.51 TO 14+95.13

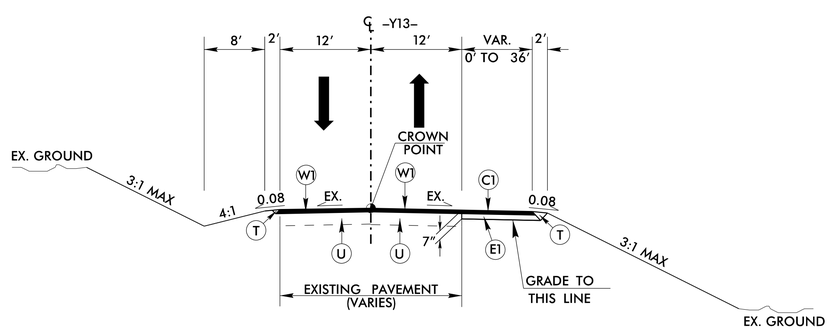

TYPICAL SECTION No. 15

-Y13- STA. 10+12.00 TO 13+35.00
-Y13- STA. 28+50.00 TO 29+20.00

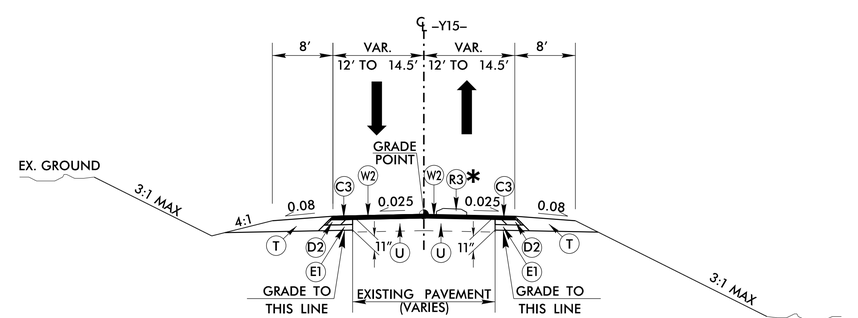

*SEE PLANS FOR MONOLITHIC ISLAND ON Y15

TYPICAL SECTION No. 16

-Y15- STA. 10+36.21 TO 11+50.00

PAVEMENT DESIGN	
C1	PROP. APPROX. 3", TYPE S9.5B
C2	PROP. VAR. DEPTH, TYPE S9.5B
C3	PROP. APPROX. 3", TYPE S9.5C
C4	PROP. VAR. DEPTH, TYPE S9.5C
D1	PROP. APPROX. 2.5", TYPE I19.0C
D2	PROP. APPROX. 4", TYPE I19.0C
D3	PROP. VAR. DEPTH, TYPE I19.0C
E1	PROP. APPROX. 4", TYPE B25.0C
E2	PROP. VAR. DEPTH, TYPE B25.0C
K	CLASS IV SUBGRADE STABILIZATION
N	GEOTEXTILE FOR SUBGRADE STABILIZATION
R1	1'-6" CONCRETE CURB AND GUTTER
R2	2'-6" CONCRETE CURB AND GUTTER
R3	5" MONOLITHIC CONCRETE ISLAND (KEYED-IN)
R4	8" x 12" CURB
S	4" CONCRETE SIDEWALK
T	EARTH MATERIAL
U	EXISTING PAVEMENT
V1	MILL EXIST. PAVEMENT 2.5"
V2	INCIDENTAL MILLING
W1	VARIABLE DEPTH ASPHALT PAVEMENT (SEE STANDARD WEDGING DETAILS SHEET NO.2A-1)
W2	VARIABLE DEPTH ASPHALT PAVEMENT (SEE STANDARD WEDGING DETAILS SHEET NO.2A-1)

NOTE: PAVEMENT EDGE SLOPES ARE 1:1 UNLESS SHOWN OTHERWISE.

Docusign Envelope ID: 5BEC07C3-22DF-4939-99FC-60F4D2BB7B09

8/17/99

Stantec

Stantec Consulting Services Inc.
801 Jones Franklin Road
Suite 300
Raleigh, NC 27606
Tel. (919) 851-6866
Fax. (919) 851-7024
www.stantec.com
License No. F-0672

PROJECT REFERENCE NO.	SHEET NO.
U-3609B	2A-9

ROADWAY DESIGN ENGINEER	PAVEMENT DESIGN ENGINEER
NORTH CAROLINA PROFESSIONAL SEAL 034404 ENGINEER KATRINA N. HAGEL 12/17/2025	NORTH CAROLINA PROFESSIONAL SEAL 044590 ENGINEER ANDREW J. WARGO 12/17/2025
Signature: Katrina N Hagel	Signature: Andrew J. Wargo

DOCUMENT NOT CONSIDERED FINAL UNLESS ALL SIGNATURES COMPLETED

PAVEMENT DESIGN	
C1	PROP. APPROX. 3", TYPE S9.5B
C2	PROP. VAR. DEPTH, TYPE S9.5B
C3	PROP. APPROX. 3", TYPE S9.5C
C4	PROP. VAR. DEPTH, TYPE S9.5C
D1	PROP. APPROX. 2.5", TYPE I19.0C
D2	PROP. APPROX. 4", TYPE I19.0C
D3	PROP. VAR. DEPTH, TYPE I19.0C
E1	PROP. APPROX. 4", TYPE B25.0C
E2	PROP. VAR. DEPTH, TYPE B25.0C
K	CLASS IV SUBGRADE STABILIZATION
N	GEOTEXTILE FOR SUBGRADE STABILIZATION
R1	1'-6" CONCRETE CURB AND GUTTER
R2	2'-6" CONCRETE CURB AND GUTTER
R3	5" MONOLITHIC CONCRETE ISLAND (KEYED-IN)
R4	8" x 12" CURB
S	4" CONCRETE SIDEWALK
T	EARTH MATERIAL
U	EXISTING PAVEMENT
V1	MILL EXIST. PAVEMENT 2.5"
V2	INCIDENTAL MILLING
W1	VARIABLE DEPTH ASPHALT PAVEMENT (SEE STANDARD WEDGING DETAILS SHEET NO.2A-1)
W2	VARIABLE DEPTH ASPHALT PAVEMENT (SEE STANDARD WEDGING DETAILS SHEET NO.2A-1)

NOTE: PAVEMENT EDGE SLOPES ARE 1:1 UNLESS SHOWN OTHERWISE.

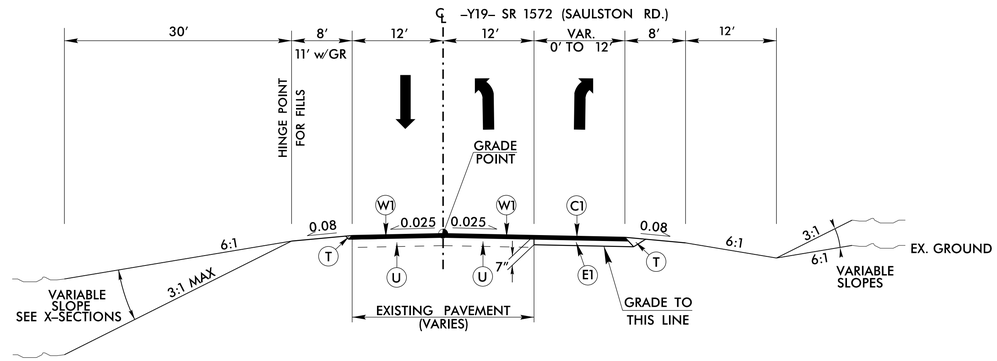

TYPICAL SECTION No. 17

–Y19– STA. 10+00.00 TO 13+79.15

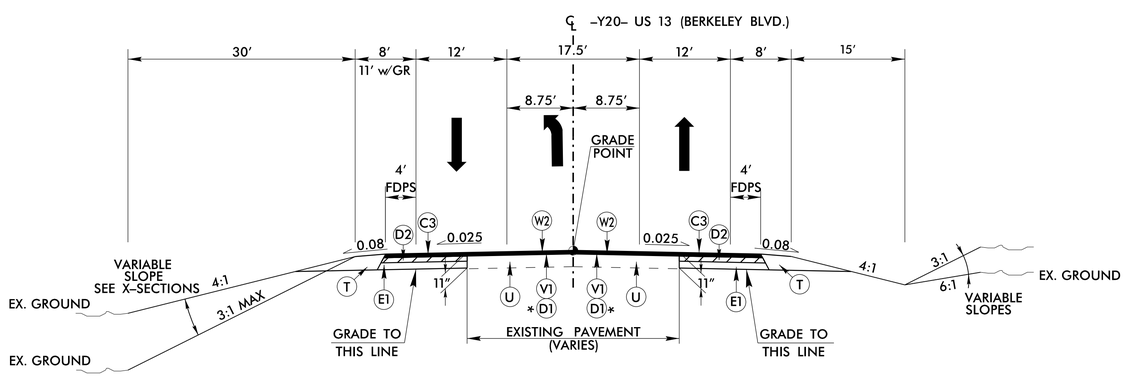

TYPICAL SECTION No. 18

–Y20– STA. 10+25.00 TO 24+22.73

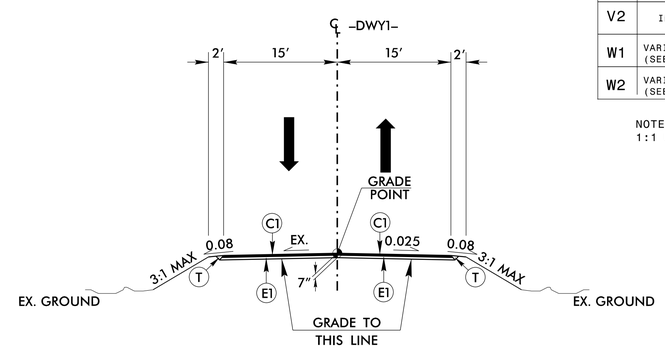

TYPICAL SECTION No. 19

–DWY1– STA. 10+34.25 TO 10+77.00

* NOTE: AFTER MILLING SEE JOINT REPAIR DETAIL SHEET 2B–4

Docusign Envelope ID: 5BEC07C3-22DF-4939-99FC-60F4D2BB7B09

8/17/99

MI ENGINEERING
1011 SCHAUB DRIVE, SUITE 100
RALEIGH, NC 27606
(919) 851-6606
FIRM PE NUMBER : P-0671

Stantec
Stantec Consulting Services Inc.
801 Jones Franklin Road
Suite 300
Raleigh, NC 27606
Tel. (919) 851-6866
Fax. (919) 851-7024
www.stantec.com
License No. F-0672

PROJECT REFERENCE NO.	SHEET NO.
U-3609B	2B-1
R/W SHEET NO.	

ROADWAY DESIGN ENGINEER

NORTH CAROLINA PROFESSIONAL SEAL 034404 ENGINEER KATRINA N. HAGEL
12/11/2025
Signed by: Katrina N Hagel

DOCUMENT NOT CONSIDERED FINAL UNLESS ALL SIGNATURES COMPLETED

50 25 0 50 100
PLANS

INTERSECTION DETAIL @ –L– US HWY 13 & –Y1– SR 1003 (NEW HOPE RD)

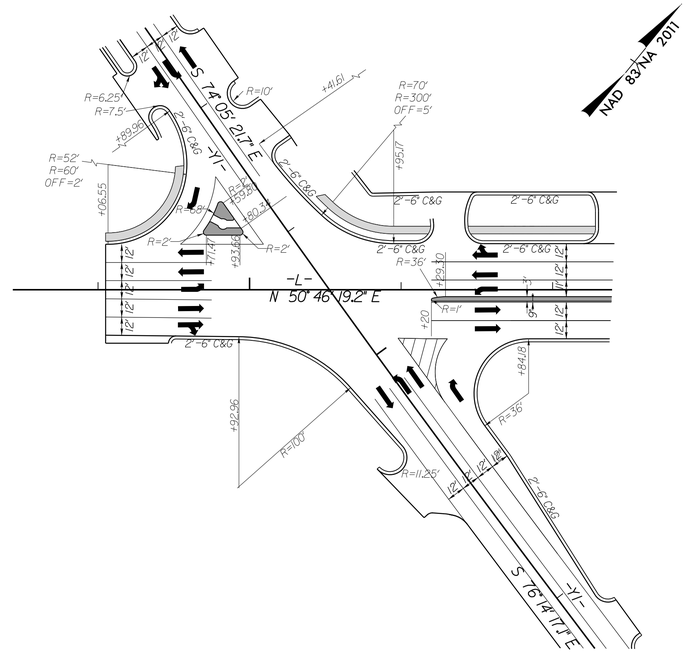

SEE SHEET 4 FOR PLAN VIEW

- PAINTED ISLAND
- 5' SIDEWALK
- MONOLITHIC ISLAND (KEYED–IN)

INTERSECTION DETAIL @ –L– US HWY 13 & –Y10–/–Y11– SR 1571 (TOMMY'S RD.)

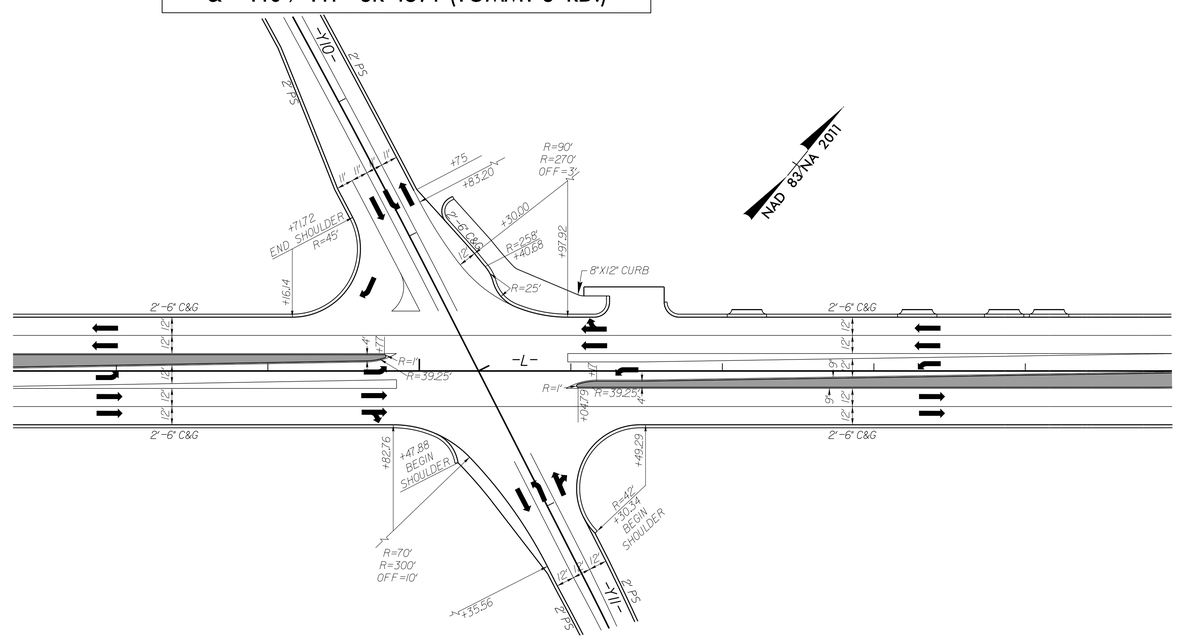

SEE SHEET 8 FOR PLAN VIEW

11/5/2025
U:\Roadway\Proj\U3609B_rdy_2B1_int.dgn
Aisely

Docusign Envelope ID: 5BEC07C3-22DF-4939-99FC-60F4D2BB7B09

MI ENGINEERING
1011 SCHAUB DRIVE, SUITE 100
RALEIGH, NC 27606
(919) 851-6606
FIRM PE NUMBER : P-0671

Stantec
Stantec Consulting Services Inc.
801 Jones Franklin Road
Suite 300
Raleigh, NC 27606
Tel. (919) 851-6866
Fax. (919) 851-7024
www.stantec.com
License No. F-0672

PROJECT REFERENCE NO.	SHEET NO.
U-3609B	2B-2
R/W SHEET NO.	
ROADWAY DESIGN ENGINEER	

NORTH CAROLINA PROFESSIONAL SEAL 034404 ENGINEER KATRINA N. HAZEL

Signed by: Katrina N Hazel

DOCUMENT NOT CONSIDERED FINAL UNLESS ALL SIGNATURES COMPLETED

50 25 0 50 100
PLANS

INTERSECTION DETAIL @ -L- US HWY 13 & -Y19- SR 1572 (SAULSTON RD)

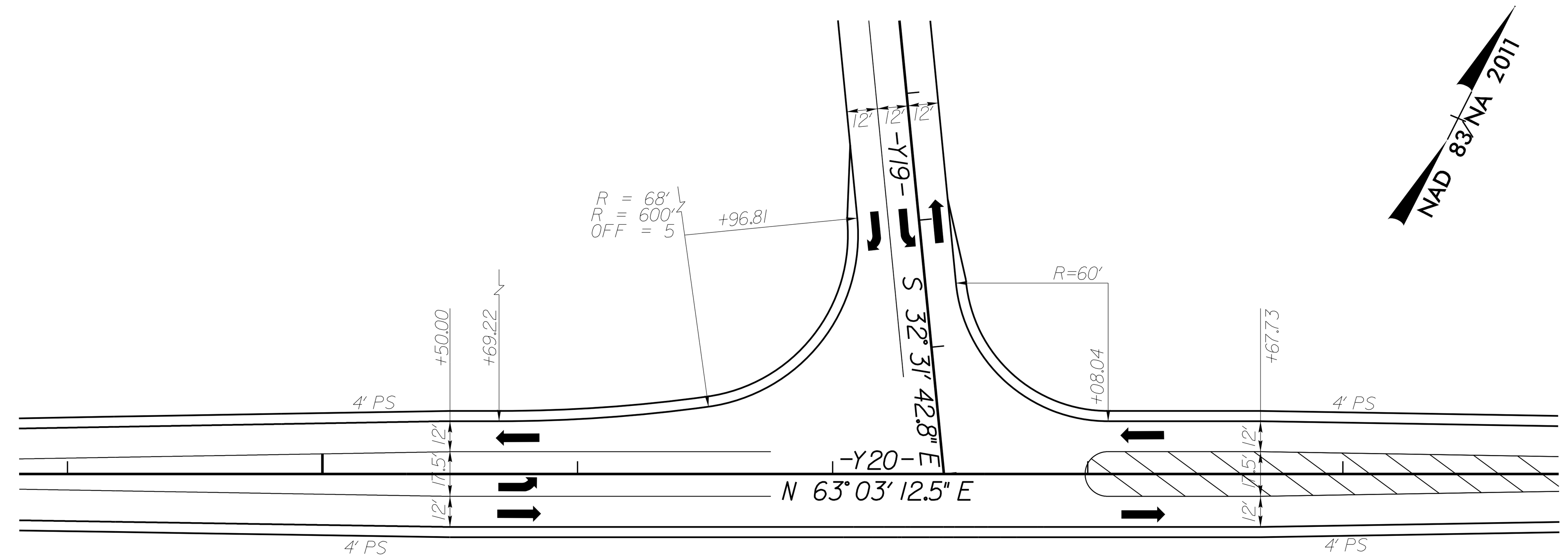

SEE SHEET 17 FOR PLAN VIEW

U-TURN DETAILS @ -L- STA. 45+50.00 US HWY 13/N. BERKELEY BLVD.

▨	PAINTED ISLAND
▭	5' SIDEWALK
■	MONOLITHIC ISLAND (KEYED-IN)

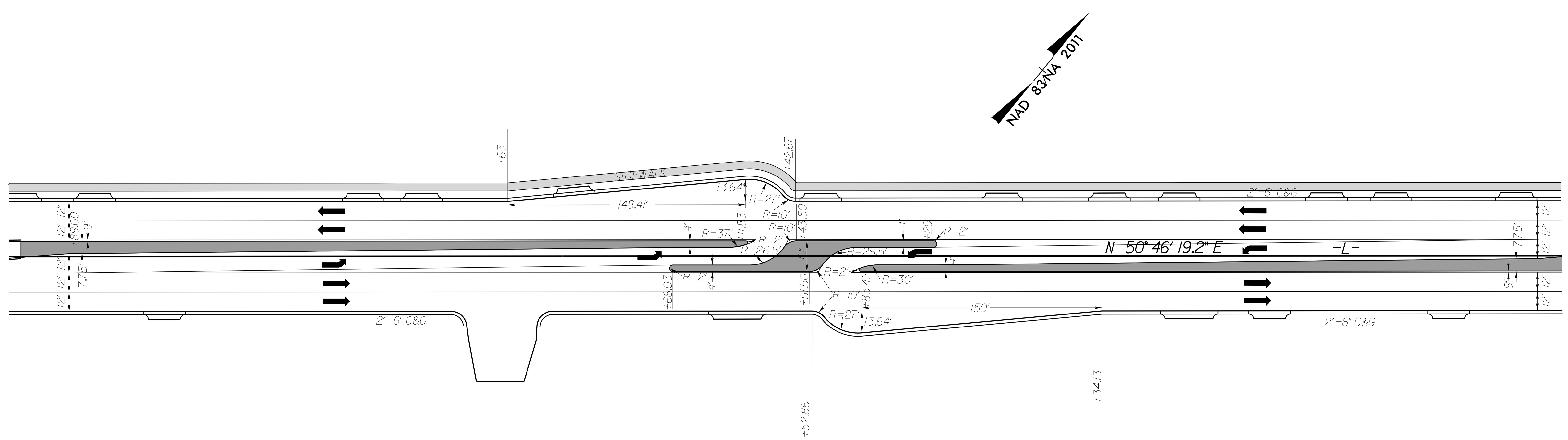

U-TURN DESIGNED FOR PASSENGER VEHICLE

SEE SHEET 6 FOR PLAN VIEW

8/17/99
11/5/2025
U:\Roadway\Proj\U3609B_rdy_2B2_int.dgn
Alsley

Docusign Envelope ID: 5BEC07C3-22DF-4939-99FC-60F4D2BB7B09

8/17/99

MI ENGINEERING
1011 SCHAUB DRIVE, SUITE 100
RALEIGH, NC 27606
(919) 851-6606
FIRM PE NUMBER : P-0671

Stantec
Stantec Consulting Services Inc.
801 Jones Franklin Road
Suite 300
Raleigh, NC 27606
Tel. (919) 851-6866
Fax. (919) 851-7024
www.stantec.com
License No. F-0672

PROJECT REFERENCE NO.	SHEET NO.
U-3609B	2B-3
RW SHEET NO.	

ROADWAY DESIGN ENGINEER

NORTH CAROLINA PROFESSIONAL SEAL 034404 ENGINEER KATRINA N. HAZEL

Signed by: Katrina N Hazel

DOCUMENT NOT CONSIDERED FINAL UNLESS ALL SIGNATURES COMPLETED

50 25 0 50 100

PLANS

U-TURN DETAILS @ -L- STA. 89+29.00 US HWY 13/N. BERKELEY BLVD.

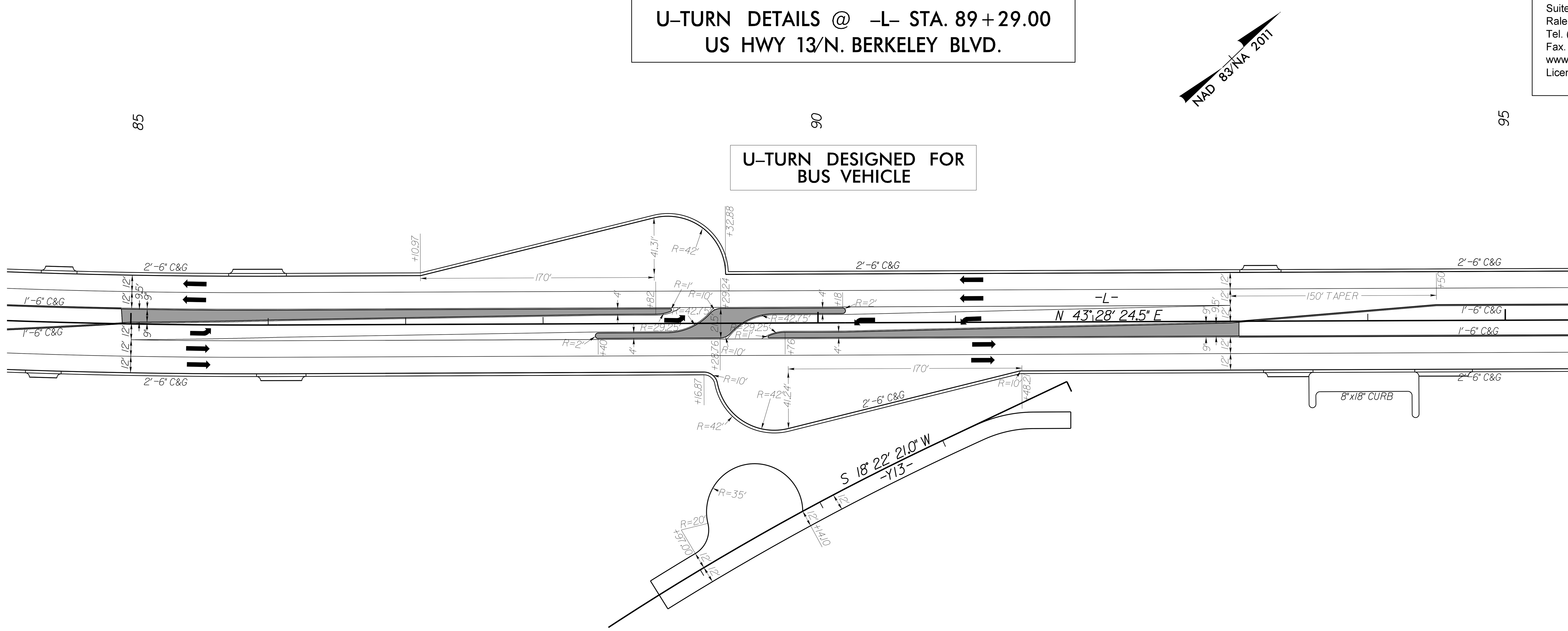

SEE SHEETS 9 & 10 FOR PLAN VIEW

PAINTED ISLAND
5' SIDEWALK
MONOLITHIC ISLAND (KEYED-IN)

INTERSECTION DETAIL @ -L- US HWY 13/ N. BERKELEY BLVD @ -Y14- DURWOOD DRIVE.

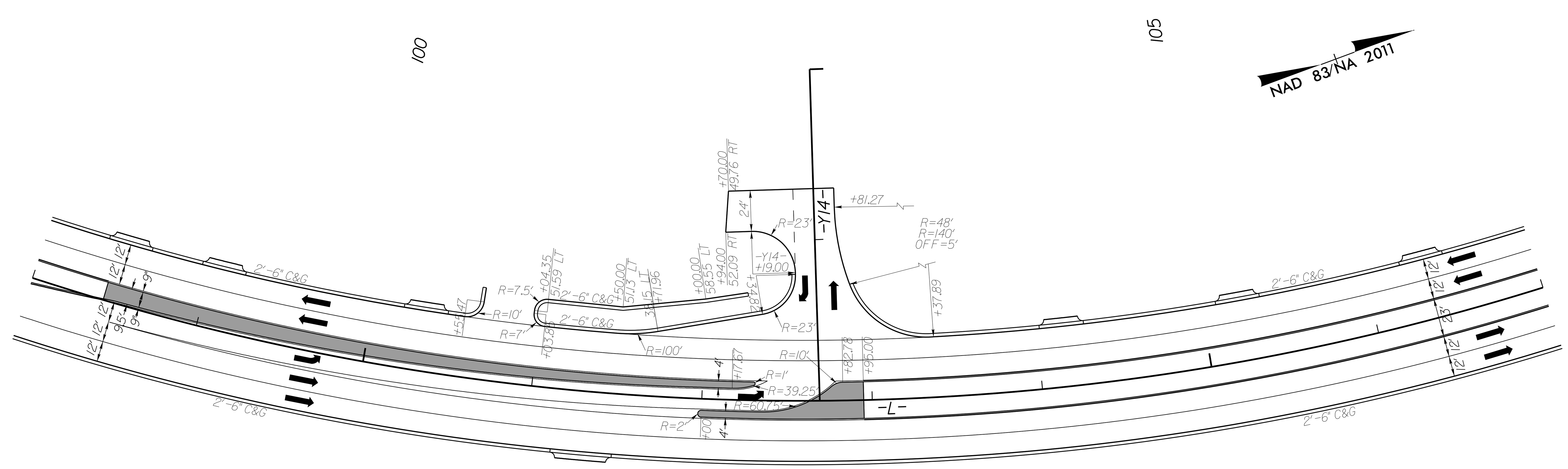

SEE SHEETS 10 & 11 FOR PLAN VIEW

11/5/2025
U:\Roadway\Proj\U3609B_rdy_2B3_int.dgn
Aisley

Docusign Envelope ID: 5BEC07C3-22DF-4939-99FC-60F4D2BB7B09

8/17/99

Stantec

Stantec Consulting Services Inc.
801 Jones Franklin Road
Suite 300
Raleigh, NC 27606
Tel. (919) 851-6866
Fax. (919) 851-7024
www.stantec.com
License No. F-0672

PROJECT REFERENCE NO.	SHEET NO.
U-3609B	2B-4

PAVEMENT DESIGN ENGINEER

NORTH CAROLINA PROFESSIONAL SEAL 034404 ENGINEER KATRINA N. HAZEL 12/17/2021

Signed by: Katrina N Hazel

DOCUMENT NOT CONSIDERED FINAL UNLESS ALL SIGNATURES COMPLETED

JOINT REPAIR DETAIL

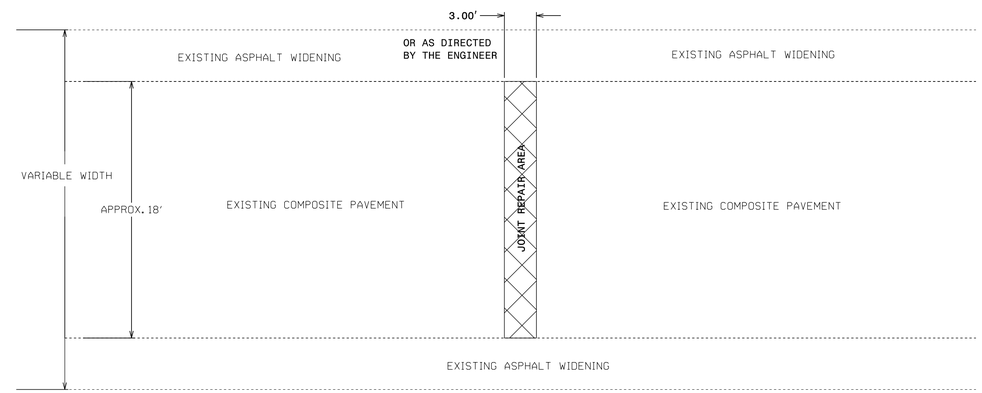

JOINT SCHEDULE	
ALIGNMENT	# JOINTS
L	39

CONTRACTOR SHALL COORDINATE WITH RESIDENT ENGINEER'S OFFICE FOR LOCATION OF JOINTS TO BE REPAIRED.

CROSS-SECTION

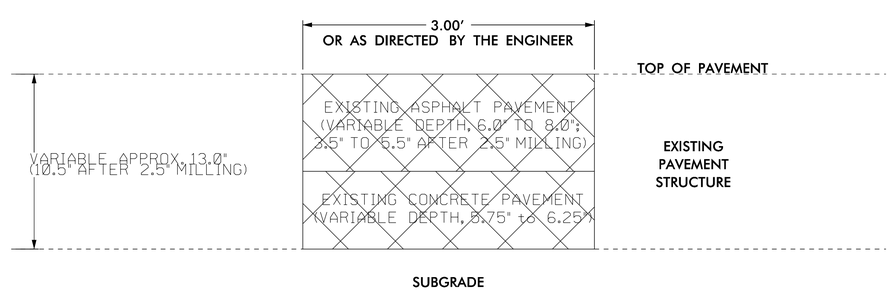

NOTE:
REMOVE ASPHALT AND CONCRETE AT JOINT LOCATIONS AS DIRECTED BY THE ENGINEER (BY SAWING CLEAN JOINTS). REMOVE A TOTAL WIDTH OF 3' (APPROX. 1.5' EACH SIDE OF JOINT OR AS DIRECTED BY THE ENGINEER). REMOVE AND REPLACE WITH ASPHALT CONCRETE BASE COURSE, TYPE B25.0C. THERE WILL BE NO DIRECT PAY FOR THIS REMOVAL AS IT WILL BE CONSIDERED INCIDENTAL TO TO THE LINE ITEM, JOINT REPAIR (TONNAGE)

Docusign Envelope ID: 5BEC07C3-22DF-4939-99FC-60F4D2BB7B09

PROJECT REFERENCE NO.	SHEET NO.
U-3609B	2C-1

8/17/99

STATE OF
NORTH CAROLINA
DEPT. OF TRANSPORTATION
DIVISION OF HIGHWAYS
RALEIGH, N.C.

ENGLISH DETAIL DRAWING FOR
MINIMUM DEPTH
CONCRETE CATCH BASIN
12″ THRU 84″ PIPE

SHEET 1 OF 2
840D02

GENERAL NOTES:

USE CLASS "B" CONCRETE THROUGHOUT.

PROVIDE ALL CATCH BASINS OVER 3′-6″ IN DEPTH WITH STEPS 12″ ON CENTER. USE STEPS WHICH COMPLY WITH STD. DRAWING 840.66.

OPTIONAL CONSTRUCTION - MONOLITHIC POUR, 2″ KEYWAY, OR #4 BAR DOWELS AT 12″ CENTERS AS DIRECTED BY THE ENGINEER.

USE FORMS FOR THE CONSTRUCTION OF THE BOTTOM SLAB.

IF REINFORCED CONCRETE PIPE IS SET IN BOTTOM SLAB OF BOX, ADD TO SLAB AS SHOWN ON STD. NO. 840.00.

USE TYPE "E", "F" AND "G" GRATES UNLESS OTHERWISE INDICATED.

FOR 8′-0″ IN HEIGHT OR LESS USE 6″ WALLS AND BOTTOM SLAB. OVER 8′-0″ TO 16′-0″ IN HEIGHT USE 8″ WALLS AND BOTTOM SLAB. ADJUST QUANTITIES ACCORDINGLY.

CONSTRUCT WITH PIPE CROWNS MATCHING.

CHAMFER ALL EXPOSED CORNERS 1″.

** FOR STRUCTURES WITH PIPE LARGER THAN 54″, MAKE THE TOP SLAB 8″ THICK.

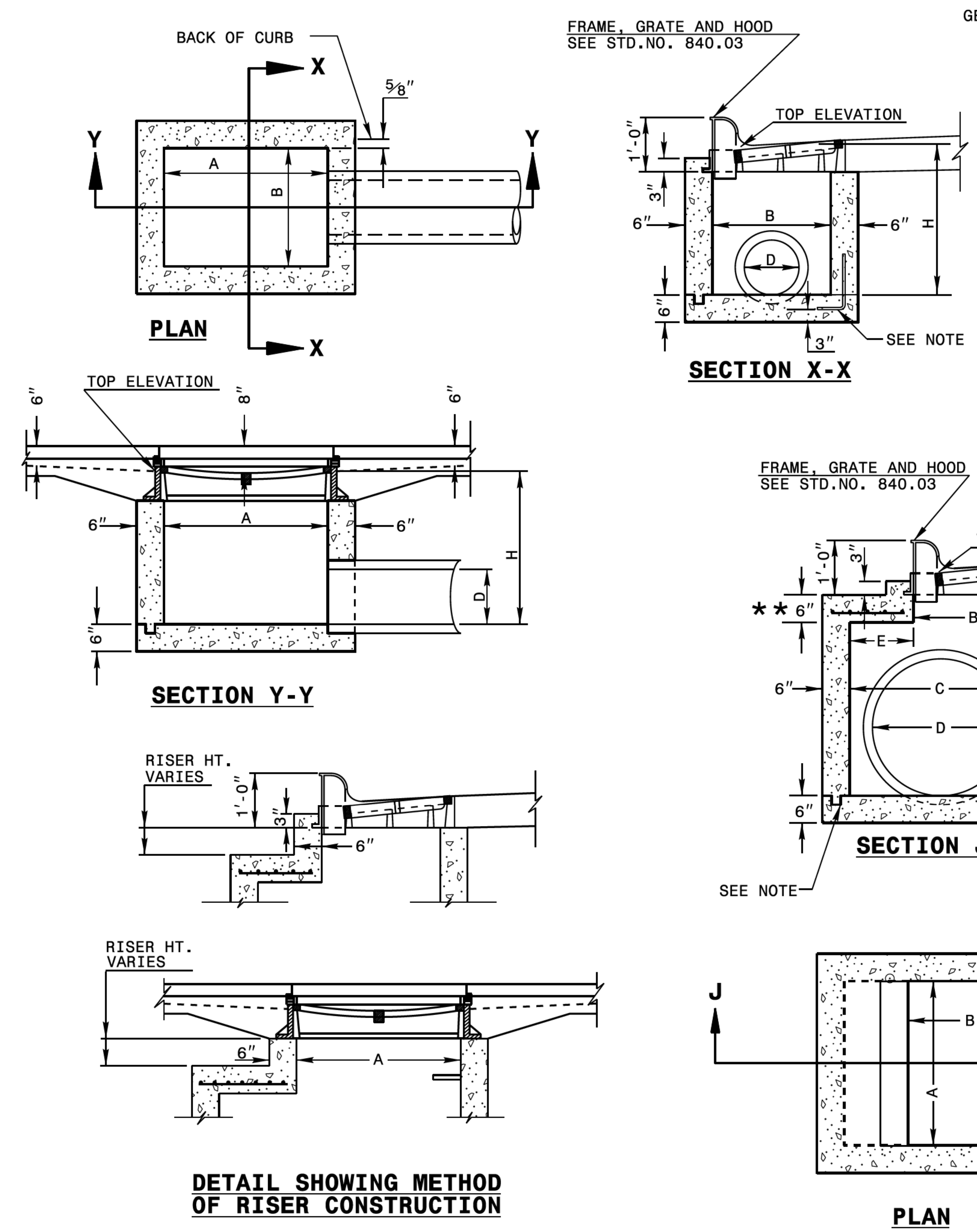

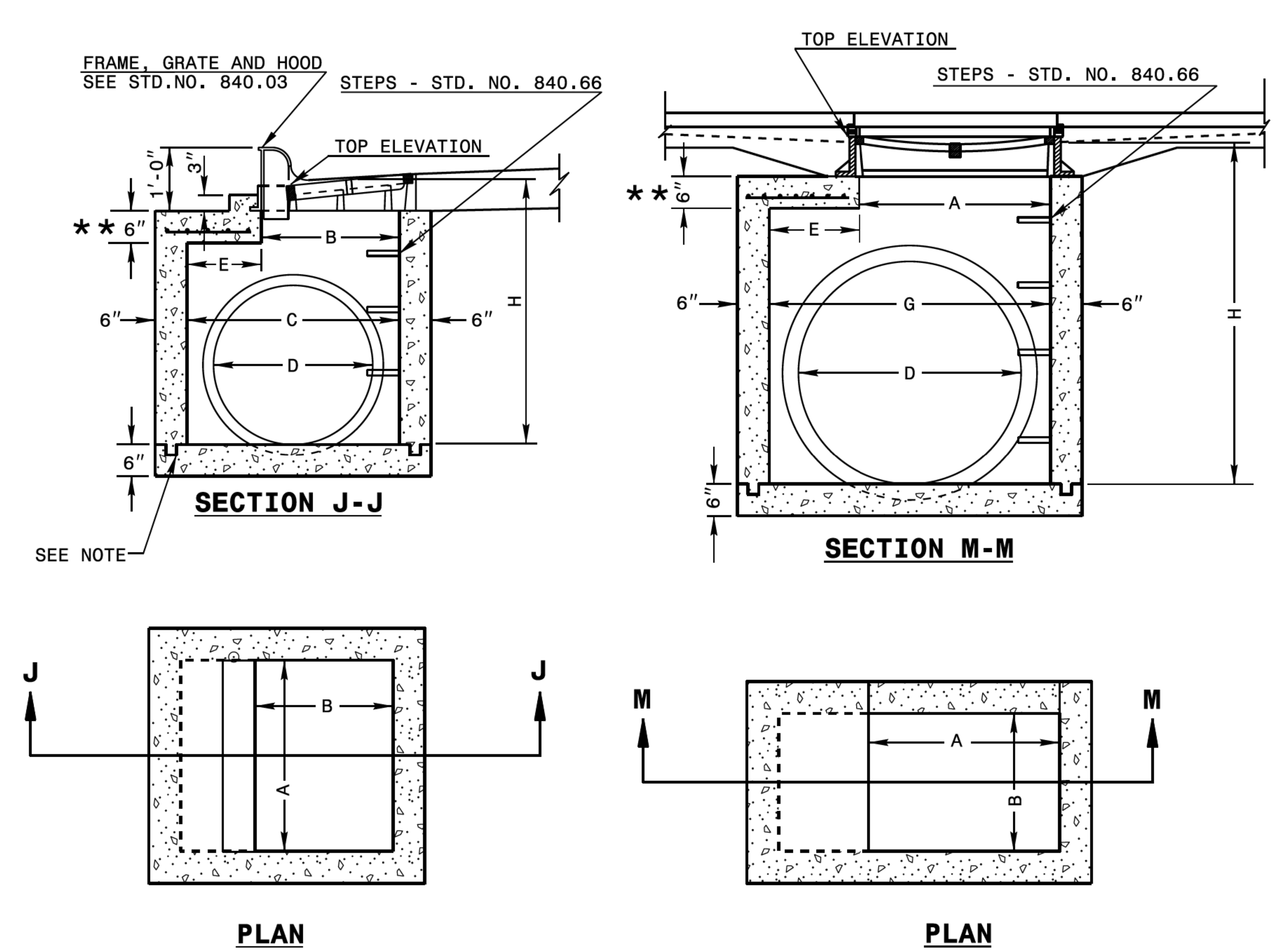

STATE OF
NORTH CAROLINA
DEPT. OF TRANSPORTATION
DIVISION OF HIGHWAYS
RALEIGH, N.C.

ENGLISH DETAIL DRAWING FOR
MINIMUM DEPTH
CONCRETE CATCH BASIN
12″ THRU 84″ PIPE

SHEET 1 OF 2
840D02

STATE OF
NORTH CAROLINA
DEPT. OF TRANSPORTATION
DIVISION OF HIGHWAYS
RALEIGH, N.C.

ENGLISH DETAIL DRAWING FOR
MINIMUM DEPTH
CONCRETE CATCH BASIN
12″ THRU 84″ PIPE

SHEET 2 OF 2
840D02

** FOR STRUCTURES WITH PIPE LARGER THAN 54″, MAKE THE TOP SLAB 8″ THICK.

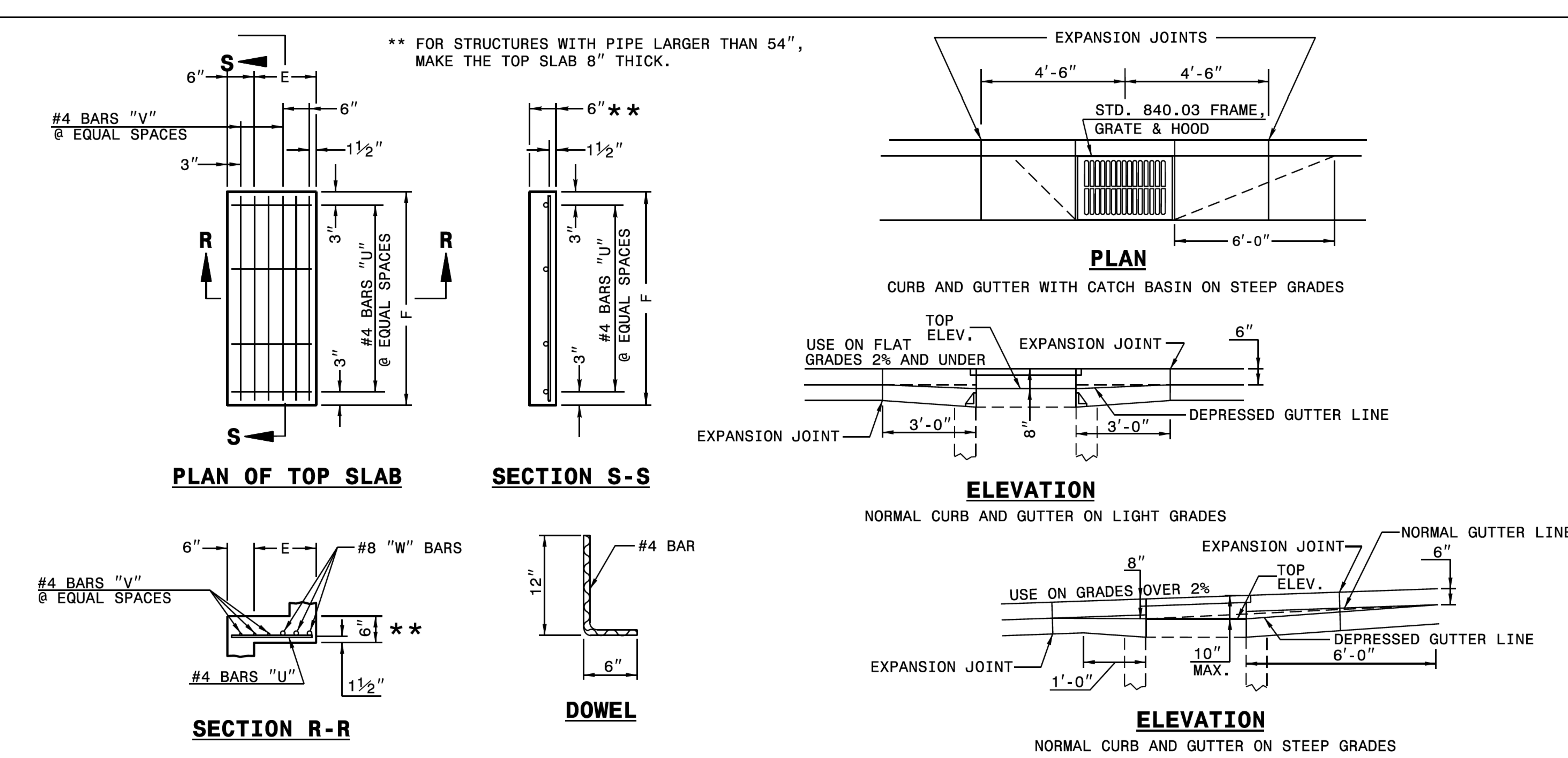

* RISER HAS .228 CUBIC YARDS OF CONCRETE PER FOOT HEIGHT

MINIMUM DIMENSIONS AND QUANTITIES FOR CONCRETE CATCH BASIN(BASED ON MIN. HEIGHT, H, WITH NO RISER) *

DIMENSIONS OF BOX AND PIPE						COVER DIMENSION		BARS-U		BARS-V		BARS-W		TOTAL LBS.	CU.YDS. CONC. IN BOX			DEDUCTIONS ONE PIPE	
PIPE	SPAN	WIDTH	WIDTH	SPAN	MIN. HEIGHT										TOP SLAB	BOTTOM SLAB	TOT. CONC. FOR MINIMUM HEIGHT, H		
D	A	B	C	G	H	E	F	NO.	LENGTH	NO.	LENGTH	NO.	LENGTH					C.M.	R.C.
12″	3′-0″	2′-2″	--	--	2′-0″	--	--	--	--	--	--	--	--	--	--	0.235	0.772	0.015	0.026
15″	3′-0″	2′-2″			2′-3″											0.235	0.829	0.023	0.036
18″	3′-0″	2′-2″			2′-6″											0.235	0.887	0.033	0.049
24″	3′-0″	2′-2″			3′-1″											0.235	1.001	0.059	0.085
30″	3′-0″	2′-2″	3′-4″	3′-4″	3′-10″	1′-2″	4′-4″	4	1′-5″	2	4′-1″	3	4′-1″	39	0.123	0.347	1.433	0.092	0.127
36″	3′-0″	2′-2″	3′-10″	3′-10″	4′-6″	1′-8″	4′-10″	4	1′-11″	3	4′-7″	3	4′-7″	43	0.161	0.432	1.714	0.132	0.178
42″	3′-0″	2′-2″	4′-5″	4′-5″	4′-11″	2′-2″	5′-5″	5	2′-5″	4	5′-2″	3	5′-2″	47	0.200	0.543	1.738	0.180	0.243
48″	3′-0″	2′-2″	5′-0″	5′-0″	5′-6″	2′-10″	6′-0″	5	3′-1″	4	5′-9″	3	5′-9″	51	0.235	0.667	2.052	0.235	0.317
54″	3′-0″	2′-2″	5′-7″	5′-7″	6′-0″	3′-5″	6′-7″	6	3′-8″	5	6′-4″	3	6′-4″	56	0.289	0.802	2.387	0.297	0.401
60″	3′-0″	2′-2″	6′-3″	6′-3″	6′-6″	4′-1″	7′-3″	6	4′-4″	5	7′-0″	3	7′-0″	61	0.340	0.973	2.722	0.363	0.546
66″	3′-0″	2′-2″	6′-11″	6′-11″	7′-0″	4′-9″	7′-11″	7	5′-0″	6	7′-8″	3	7′-8″	66	0.391	1.160	3.057	0.440	0.655
72″	3′-0″	2′-2″	7′-6″	7′-6″	7′-6″	5′-3″	8′-6″	7	5′-6″	6	8′-3″	3	8′-3″	72	0.442	1.340	3.392	0.524	0.774
78″	3′-0″	2′-2″	8′-1″	8′-1″	8′-0″	5′-11″	9′-1″	8	6′-2″	7	8′-10″	3	8′-10″	78	0.493	1.530	3.727	0.615	0.893
84″	3′-0″	2′-2″	8′-9″	8′-9″	8′-6″	6′-7″	9′-9″	8	6′-10″	7	9′-6″	3	9′-6″	84	0.544	1.760	4.062	0.713	1.010

STATE OF
NORTH CAROLINA
DEPT. OF TRANSPORTATION
DIVISION OF HIGHWAYS
RALEIGH, N.C.

ENGLISH DETAIL DRAWING FOR
MINIMUM DEPTH
CONCRETE CATCH BASIN
12″ THRU 84″ PIPE

SHEET 2 OF 2
840D02

SEAL 33144 NORTH CAROLINA PROFESSIONAL ENGINEER NICOLE M. HACKLER 12/11/2025

Signed by: Nicole M Hackler
5884323D34164C5...

DOCUMENT NOT CONSIDERED FINAL UNLESS ALL SIGNATURES COMPLETED

CONTRACT STANDARDS AND DEVELOPMENT UNIT
Office 919-707-6950 FAX 919-250-4119

SEE PLATE FOR TITLE

ORIGINAL BY: 2002 Std.840.01 DATE:
MODIFIED BY: E.E. WARD DATE: 3-1-02
CHECKED BY: DATE:
FILE SPEC.: s:Special Details/jhowerton/840d02.dgn

8/17/99

Docusign Envelope ID: 5BEC07C3-22DF-4939-99FC-60F4D2BB7B09

PROJECT REFERENCE NO.	SHEET NO.
U-3609B	2C-2

STATE OF
NORTH CAROLINA
DEPT. OF TRANSPORTATION
DIVISION OF HIGHWAYS
RALEIGH, N.C.

ENGLISH DETAIL DRAWING FOR
MINIMUM DEPTH CONCRETE DROP INLET
12″ THRU 30″ PIPE

SHEET 1 OF 1
840D14

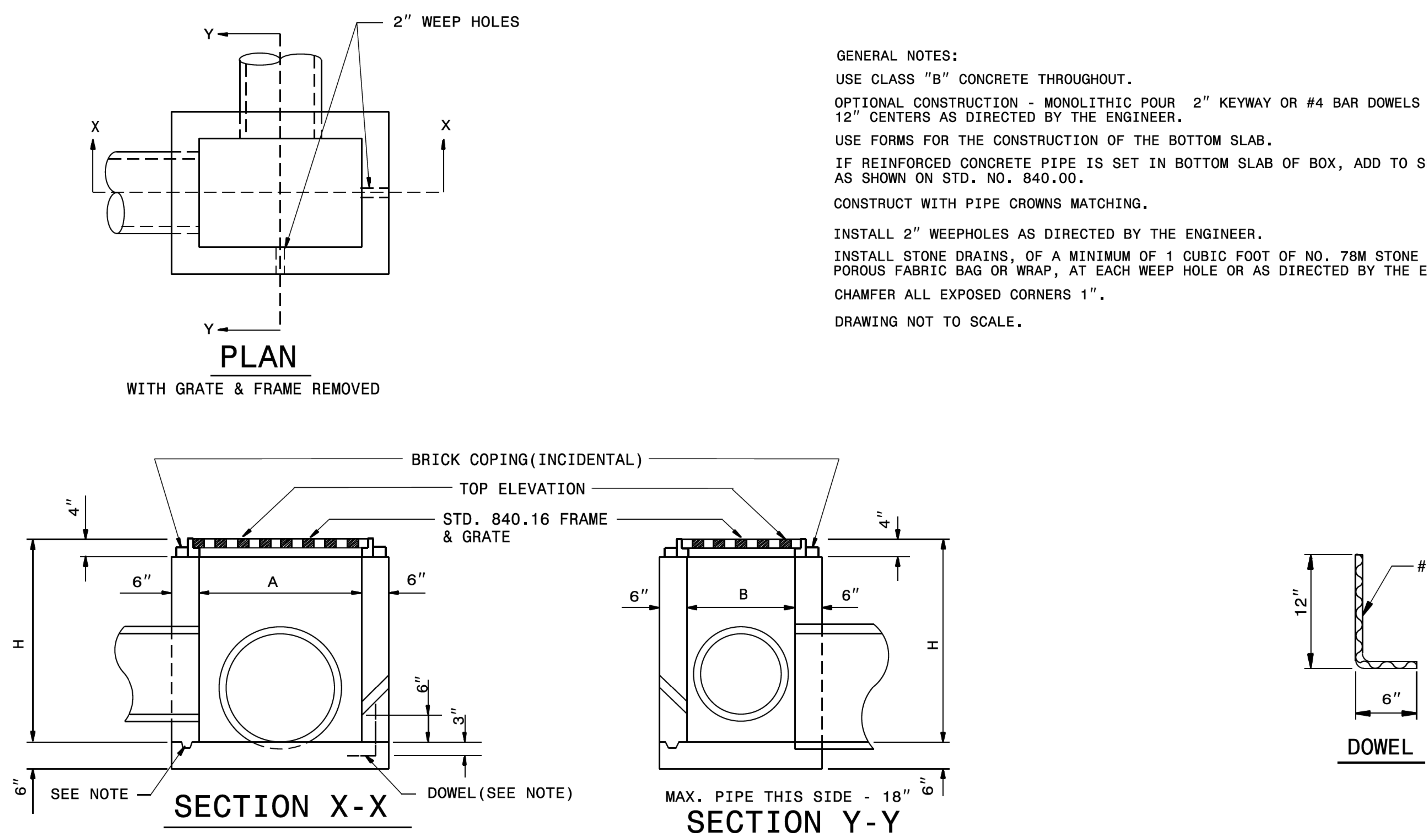

GENERAL NOTES:

USE CLASS "B" CONCRETE THROUGHOUT.

OPTIONAL CONSTRUCTION - MONOLITHIC POUR 2″ KEYWAY OR #4 BAR DOWELS AT 12″ CENTERS AS DIRECTED BY THE ENGINEER.

USE FORMS FOR THE CONSTRUCTION OF THE BOTTOM SLAB.

IF REINFORCED CONCRETE PIPE IS SET IN BOTTOM SLAB OF BOX, ADD TO SLAB AS SHOWN ON STD. NO. 840.00.

CONSTRUCT WITH PIPE CROWNS MATCHING.

INSTALL 2″ WEEPHOLES AS DIRECTED BY THE ENGINEER.

INSTALL STONE DRAINS, OF A MINIMUM OF 1 CUBIC FOOT OF NO. 78M STONE IN A POROUS FABRIC BAG OR WRAP, AT EACH WEEP HOLE OR AS DIRECTED BY THE ENGINEER.

CHAMFER ALL EXPOSED CORNERS 1″.

DRAWING NOT TO SCALE.

DIMENSIONS AND QUANTITIES FOR DROP INLET(BASED ON MIN. HEIGHT, H)

DIMENSIONS OF BOX & PIPE				CUBIC YARDS CONC. IN BOX			DEDUCTIONS FOR ONE PIPE	
PIPE	SPAN	WIDTH	MIN. HEIGHT					
D	A	B	H	BOTTOM SLAB	WALL PER FT. HT.	TOTAL CONCRETE FOR MINIMUM HEIGHT, H	C.M.	R.C.
12″	3′-0″	2′-0″	1′-8″	0.222	0.222	0.555	0.015	0.026
15″			1′-11″			0.611	0.023	0.036
18″			2′-1″			0.667	0.033	0.049
24″			2′-9″			0.814	0.059	0.085
30″	3′-0″	2′-0″	3′-2″	0.222	0.222	0.925	0.092	0.127

STATE OF
NORTH CAROLINA
DEPT. OF TRANSPORTATION
DIVISION OF HIGHWAYS
RALEIGH, N.C.
ENGLISH DETAIL DRAWING FOR
MINIMUM DEPTH CONCRETE DROP INLET
12″ THRU 30″ PIPE
SHEET OF
840D14

STATE OF
NORTH CAROLINA
DEPT. OF TRANSPORTATION
DIVISION OF HIGHWAYS
RALEIGH, N.C.

ENGLISH DETAIL DRAWING FOR
MINIMUM DEPTH BRICK DROP INLET
12″ THRU 30″ PIPE

SHEET 1 OF 1
840D15

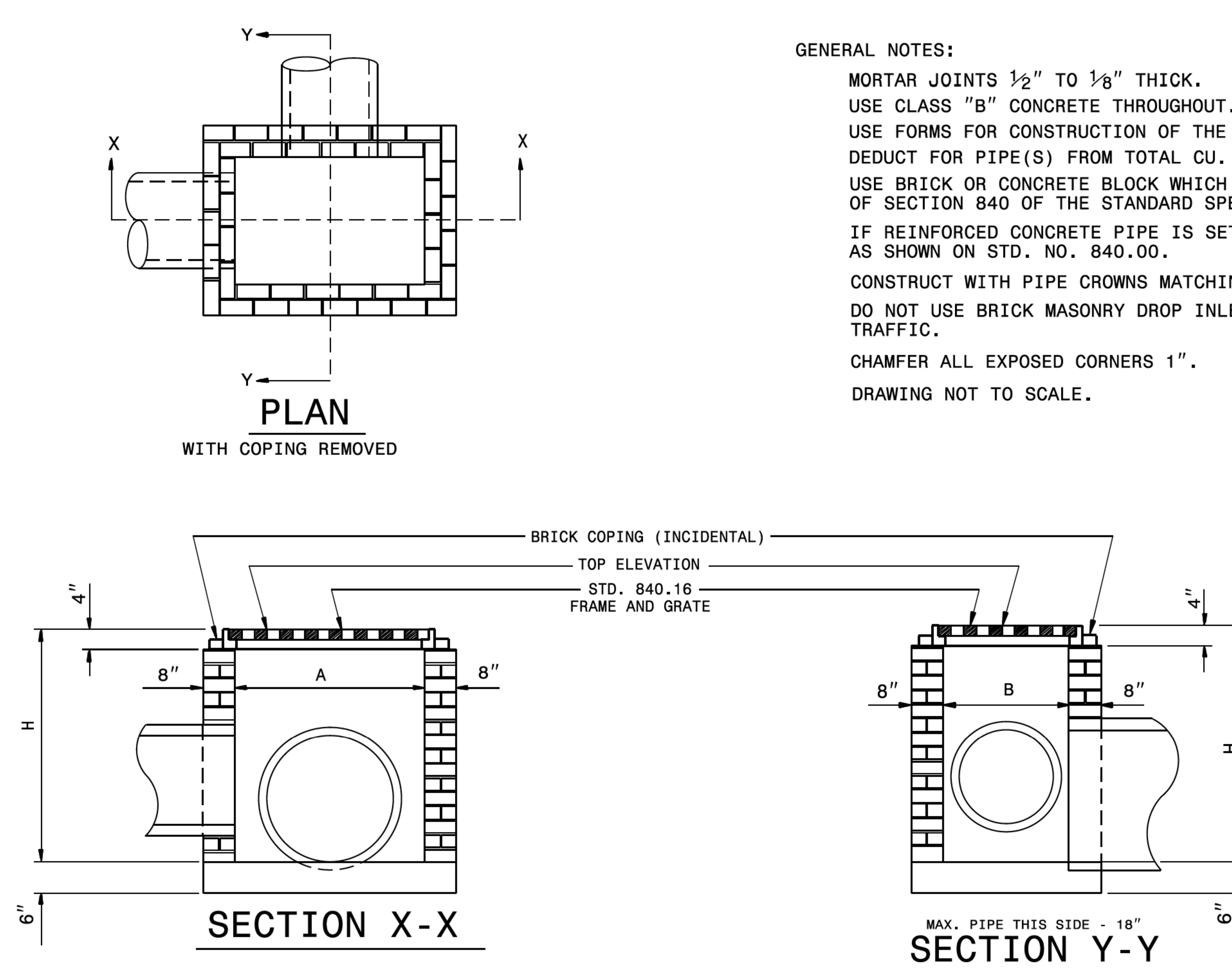

GENERAL NOTES:

MORTAR JOINTS ½″ TO ⅛″ THICK.

USE CLASS "B" CONCRETE THROUGHOUT.

USE FORMS FOR CONSTRUCTION OF THE BOTTOM SLAB.

DEDUCT FOR PIPE(S) FROM TOTAL CU. YDS. OF BRICK MASONRY.

USE BRICK OR CONCRETE BLOCK WHICH COMPLIES WITH THE REQUIREMENTS OF SECTION 840 OF THE STANDARD SPECIFICATIONS.

IF REINFORCED CONCRETE PIPE IS SET IN BOTTOM SLAB OF BOX, ADD TO SLAB AS SHOWN ON STD. NO. 840.00.

CONSTRUCT WITH PIPE CROWNS MATCHING.

DO NOT USE BRICK MASONRY DROP INLET IN LOCATIONS SUBJECT TO TRAFFIC.

CHAMFER ALL EXPOSED CORNERS 1″.

DRAWING NOT TO SCALE.

DIMENSIONS AND QUANTITIES FOR DROP INLET(BASED ON MIN. HEIGHT, H)

DIMENSIONS OF BOX & PIPE				CUBIC YARDS CONCRETE	CUBIC YARDS BRICK MASONRY		DEDUCTIONS FOR ONE PIPE	
PIPE	SPAN	WIDTH	MIN. HEIGHT					
D	A	B	H	BOTTOM SLAB	WALL PER FOOT HT.	TOTAL BRICK MASONRY FOR MIN. HEIGHT, H	C.S.	R.C.
12″	3′-0″	2′-0″	1′-8″	0.268	0.313	0.470	0.020	0.032
15″			1′-11″	0.268	0.313	0.548	0.031	0.047
18″			2′-1″	0.268	0.313	0.626	0.044	0.065
24″			2′-9″	0.268	0.313	0.835	0.078	0.113
30″	3′-0″	2′-0″	3′-2″	0.268	0.313	0.991	0.122	0.170

STATE OF
NORTH CAROLINA
DEPT. OF TRANSPORTATION
DIVISION OF HIGHWAYS
RALEIGH, N.C.
ENGLISH DETAIL DRAWING FOR
MINIMUM DEPTH BRICK DROP INLET
12″ THRU 30″ PIPE
SHEET 1 OF 1
840D15

NORTH CAROLINA PROFESSIONAL ENGINEER SEAL 33144 NICOLE M. HECKLER 12/11/2025

Signed by: Nicole M Heckler

DOCUMENT NOT CONSIDERED FINAL UNLESS ALL SIGNATURES COMPLETED

CONTRACT STANDARDS AND DEVELOPMENT UNIT
Office 919-707-6950 FAX 919-250-4119

SEE PLATE FOR TITLE

ORIGINAL BY: 2002 STD. 840.14 DATE:
MODIFIED BY: E.E. WARD DATE: 3-4-02
CHECKED BY: DATE:
FILE SPEC.:

Docusign Envelope ID: 5BEC07C3-22DF-4939-99FC-60F4D2BB7B09

8/17/99

PROJECT REFERENCE NO.	SHEET NO.
U-3609B	2C-3

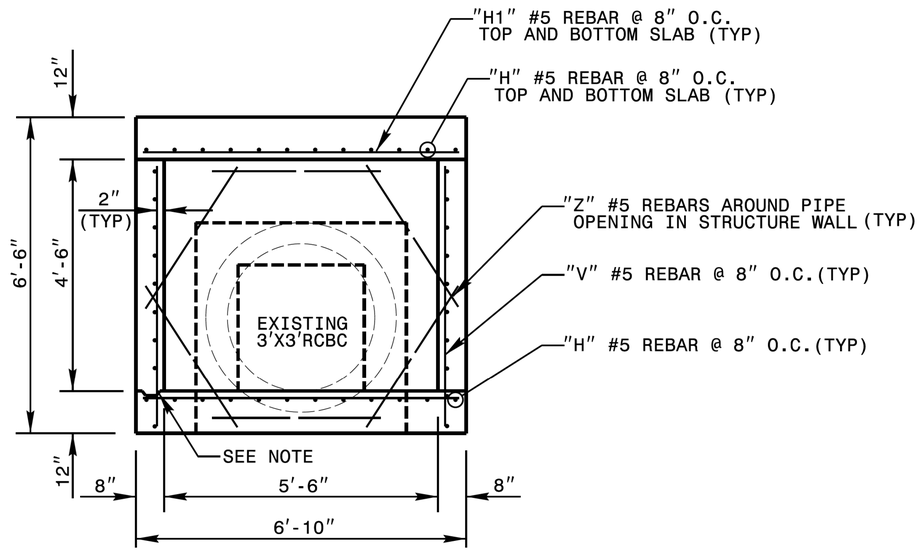

SECTION A-A

GENERAL NOTES:

USE CLASS "B" CONCRETE THROUGHOUT.

PROVIDE ALL JUNCTION BOXES OVER 3'-6" IN DEPTH WITH STEPS 12" ON CENTER. USE STEPS WHICH COMPLY WITH STD. DRAWING 840.66.

OPTIONAL CONSTRUCTION - MONOLITHIC POUR, 2" KEYWAY, OR #4 BAR DOWELS AT 12" CENTERS AS DIRECTED BY THE ENGINEER.

USE FORMS FOR THE CONSTRUCTION OF THE BOTTOM SLAB.

INSTALL MANHOLE IN POSITION AS DIRECTED BY THE ENGINEER. CUT AND BEND ALL REBAR CROSSING THIS OPENING TO ALLOW 2" MINIMUM CONCRETE COVERAGE.

CHAMFER ALL EXPOSED CORNERS 1".

2" MINIMUM CONCRETE COVERAGE ON ALL REBAR.

IF REINFORCED CONCRETE PIPE IS SET IN BASE SLAB OR BOX, ADD TO BASE AS SHOWN IN STD. NO. 840.00.

MAKE ALL ADJUSTMENTS AS DIRECTED BY THE ENGINEER

FIELD VERIFY THE DIMENSIONS FOR THE EXISTING 3'X3' RCBC

BILL OF MATERIALS

BAR	NO.	SIZE	LENGTH	WEIGHT
H	40	#5	4'-0"	167
H1	21	#5	6'-6"	143
V	22	#5	6'-2"	142
Z	6	#5	4'-0"	25
TOTAL REINF. STEEL (LBS.)				477
TOTAL CONC. (CU. YDS.)				5.8

* 0.54 CU. YD. DEDUCTION FOR 1-42" RC PIPE
* 0.62 CU. YD. DEDUCTION FOR 3'x3' RCBC
* NO DEDUCTION HAS BEEN MADE FOR PIPE OR CULVERT

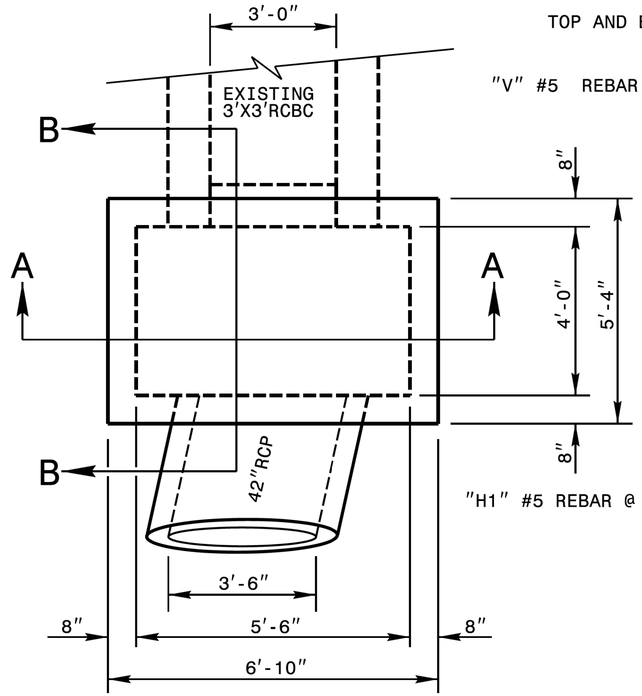

PLAN VIEW

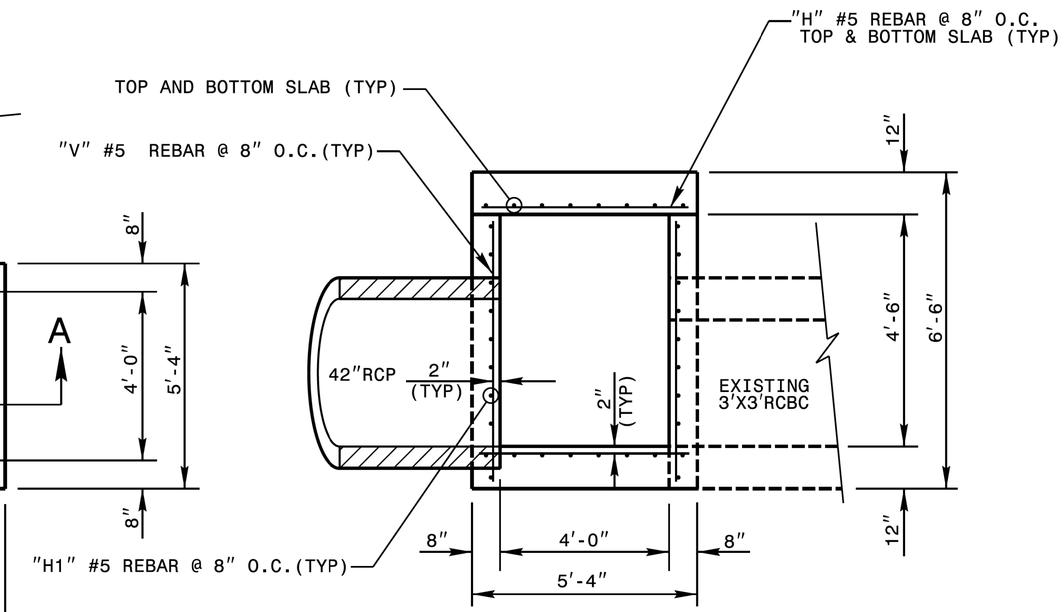

SECTION B-B

DOCUMENT NOT CONSIDERED FINAL UNLESS ALL SIGNATURES COMPLETED

NORTH CAROLINA PROFESSIONAL ENGINEER SEAL 33144 NICOLE M. HACKLER 12/19/2025

Signed by: Nicole M Hackler
5884323D34164C5...

CONTRACT STANDARDS & DEVELOPMENT UNIT
STANDARDS AND SPECIAL DESIGN
Office 919-707-6950 FAX 919-250-4119

TRAFFIC BEARING JUNCTION BOX FOR EXISTING 3'X3'RCBC AND PROPOSED 42"RCP

ORIGINAL BY: nbritt DATE: 07/29/14
MODIFIED BY: nbritt DATE: 07/07/16
CHECKED BY: DATE:
FILE SPEC.: detail/nbritt/english/rural/r4753 3x3culv42tbjb.dgn

Docusign Envelope ID: 5BEC07C3-22DF-4939-99FC-60F4D2BB7B09

8/17/99

PROJECT REFERENCE NO.	SHEET NO.
U-3609B	2C-4

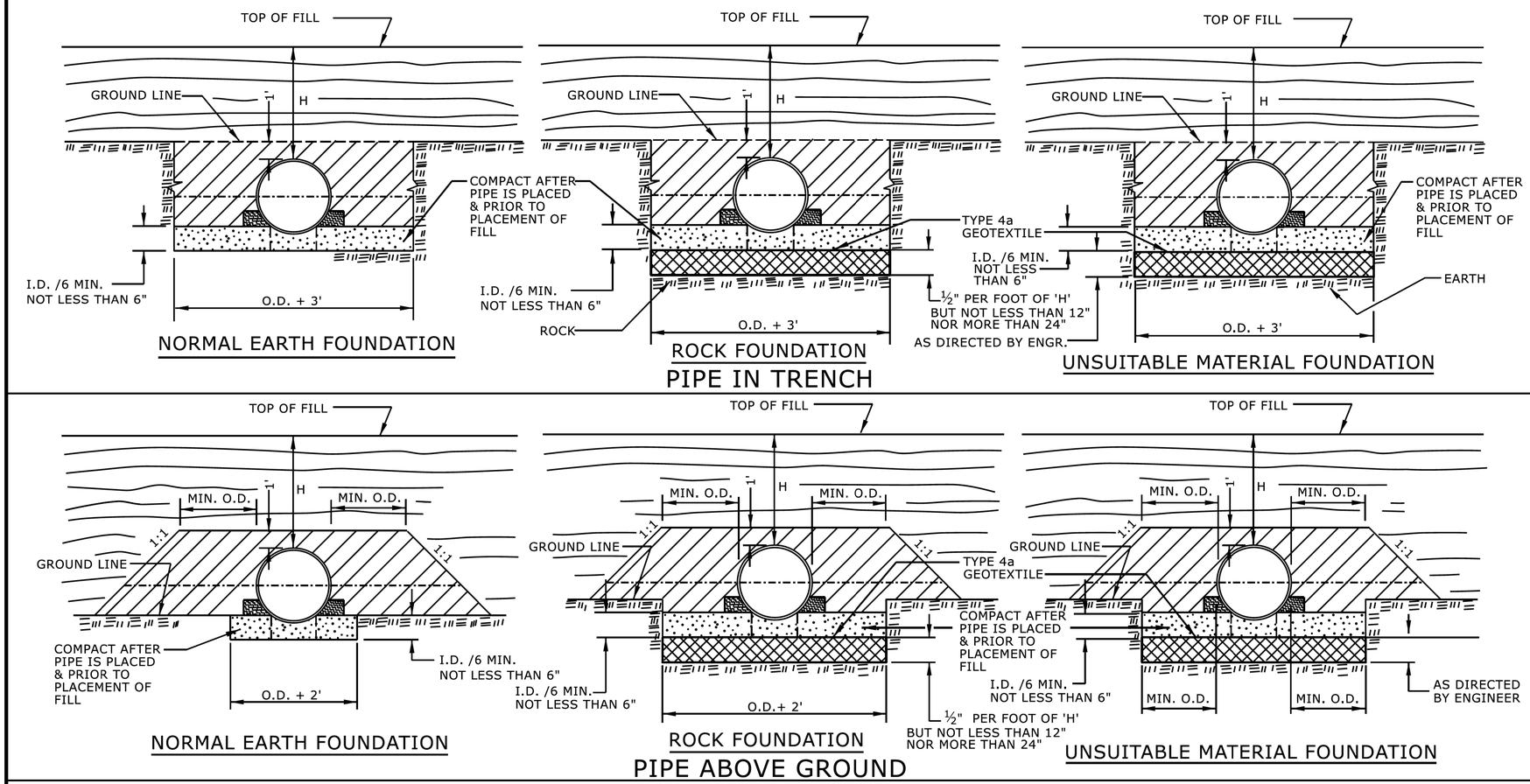

GENERAL NOTES:

I.D. = THE MAXIMUM HORIZONTAL INSIDE DIAMETER DIMENSION.

O.D. = THE MAXIMUM HORIZONTAL OUTSIDE DIAMETER DIMENSION.

H = THE FILL HEIGHT MEASURED VERTICALLY AT ANY POINT ALONG THE PIPE FROM THE TOP OF THE PIPE TO THE TOP OF THE EMBANKMENT AT THAT POINT.

APPROVED SUITABLE LOCAL MATERIAL.

TAKE CARE TO FULLY COMPACT HAUNCH ZONE OF PIPE BACKFILL.

LOOSELY PLACED SELECT MATERIAL CLASS III OR CLASS II, TYPE 1 FOR PIPE BEDDING. LEAVE SECTION DIRECTLY BENEATH PIPE UNCOMPACTED AS PIPE SEATING AND BACKFILL WILL ACCOMPLISH COMPACTION.

DO NOT OPERATE HEAVY EQUIPMENT OVER ANY PIPE CULVERT UNTIL THE PIPE CULVERT HAS BEEN PROPERLY BACKFILLED AND COVERED WITH AT LEAST 3 FEET OF APPROVED MATERIAL.

REFER TO NCDOT PIPE MATERIAL SELECTION GUIDE AND STANDARD SPECIFICATIONS FOR ALLOWABLE PIPE FILL HEIGHTS AND PIPE SPECIFICATIONS.

SPRINGLINE OF PIPE

SELECT BACKFILL MATERIAL CLASS III OR CLASS II, TYPE 1 ABOVE AND BELOW SPRINGLINE.

UNDISTURBED EARTH MATERIAL

SELECT MATERIAL CLASS V OR VI FOR FOUNDATION CONDITIONING. ENCAPSULATE WITH TYPE IV GEOTEXTILE AS DIRECTED BY THE ENGINEER.

STATE OF NORTH CAROLINA
DEPT. OF TRANSPORTATION
DIVISION OF HIGHWAYS
RALEIGH, N.C.

ROADWAY DETAIL DRAWING FOR

METHOD OF PIPE INSTALLATION

FLEXIBLE PIPE

SHEET 1 OF 2

300.01

NORTH CAROLINA PROFESSIONAL SEAL 033144 ENGINEER NICOLE M. HAEKLER 12/31/2025

Signed by: Nicole M Haekler
5884323D34164C5...

DOCUMENT NOT CONSIDERED FINAL UNLESS ALL SIGNATURES COMPLETED

CONTRACTS STANDARDS AND DEVELOPMENT UNIT
Office 919-707-6950 FAX 919-250-4119

SEE TITLE BLOCK

ORIGINAL BY: S.CALHOUN DATE: 7-25-2024
MODIFIED BY: DATE:
CHECKED BY: DATE:
FILE SPEC.:

Docusign Envelope ID: 5BEC07C3-22DF-4939-99FC-60F4D2BB7B09

8/17/99

PROJECT REFERENCE NO.	SHEET NO.
U-3609B	2C-5

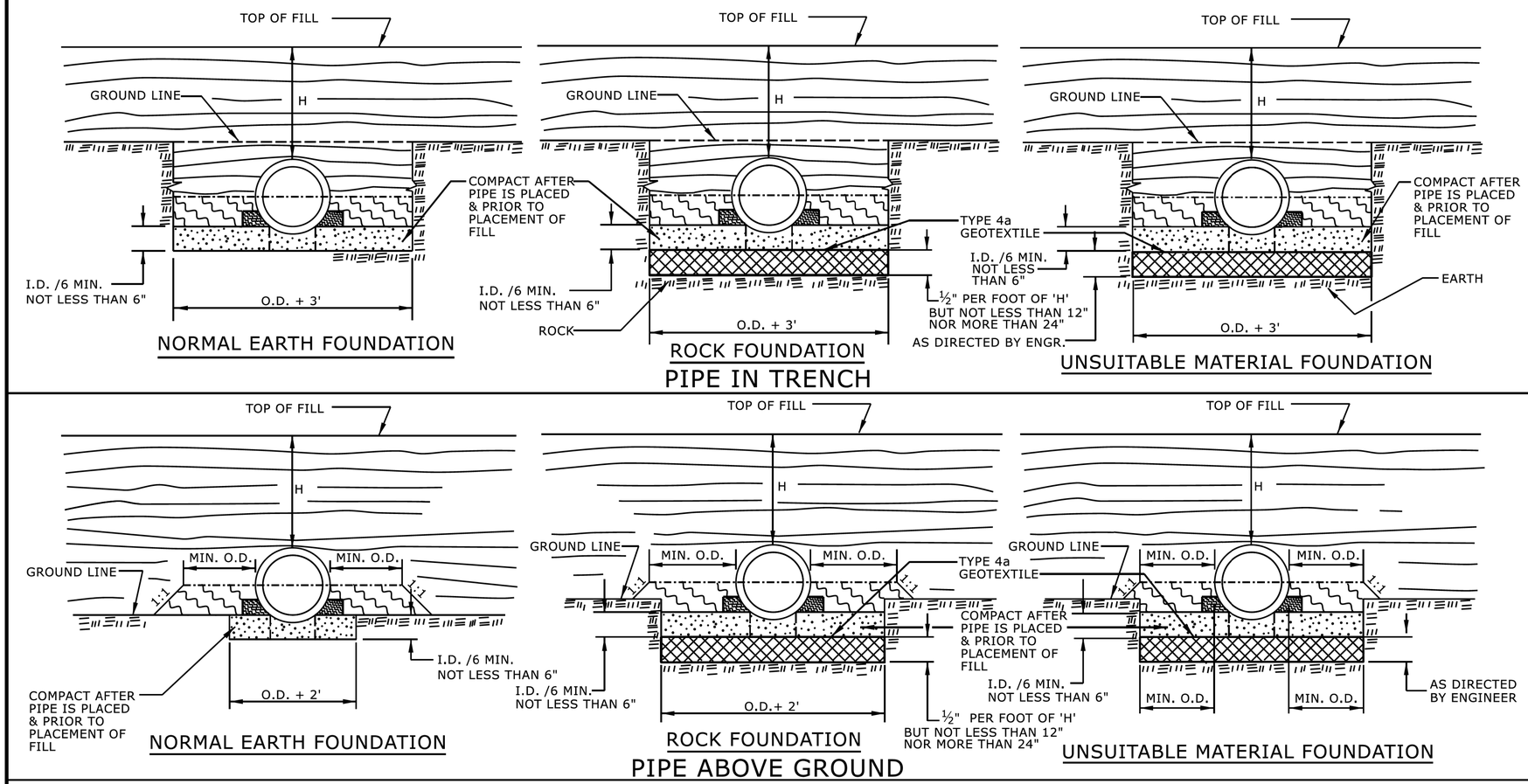

GENERAL NOTES:

I.D. = THE MAXIMUM HORIZONTAL INSIDE DIAMETER DIMENSION.

O.D. = THE MAXIMUM HORIZONTAL OUTSIDE DIAMETER DIMENSION.

H = THE FILL HEIGHT MEASURED VERTICALLY AT ANY POINT ALONG THE PIPE FROM THE TOP OF THE PIPE TO THE TOP OF THE EMBANKMENT AT THAT POINT.

APPROVED SUITABLE LOCAL MATERIAL.

TAKE CARE TO FULLY COMPACT HAUNCH ZONE OF PIPE BACKFILL.

LOOSELY PLACED SELECT MATERIAL CLASS III OR CLASS II, TYPE 1 FOR PIPE BEDDING. LEAVE SECTION DIRECTLY BENEATH PIPE UNCOMPACTED AS PIPE SEATING AND BACKFILL WILL ACCOMPLISH COMPACTION.

DO NOT OPERATE HEAVY EQUIPMENT OVER ANY PIPE CULVERT UNTIL THE PIPE CULVERT HAS BEEN PROPERLY BACKFILLED AND COVERED WITH AT LEAST 3 FEET OF APPROVED MATERIAL.

REFER TO NCDOT PIPE MATERIAL SELECTION GUIDE AND STANDARD SPECIFICATIONS FOR ALLOWABLE PIPE FILL HEIGHTS AND PIPE SPECIFICATIONS.

SPRINGLINE OF PIPE

SELECT BACKFILL MATERIAL CLASS III OR CLASS II, BELOW SPRINGLINE.

UNDISTURBED EARTH MATERIAL

SELECT MATERIAL CLASS V OR VI FOR FOUNDATION CONDITIONING. ENCAPSULATE WITH TYPE IV GEOTEXTILE AS DIRECTED BY THE ENGINEER.

STATE OF NORTH CAROLINA
DEPT. OF TRANSPORTATION
DIVISION OF HIGHWAYS
RALEIGH, N.C.

ROADWAY DETAIL DRAWING FOR

METHOD OF PIPE INSTALLATION

RIGID PIPE

SHEET 2 OF 2

300.01

NORTH CAROLINA PROFESSIONAL SEAL 033144 ENGINEER NICOLE M. HACKLER 12/11/2025

Signed by: Nicole M Hackler
5884323D34164C5...

DOCUMENT NOT CONSIDERED FINAL UNLESS ALL SIGNATURES COMPLETED

CONTRACTS STANDARDS AND DEVELOPMENT UNIT
Office 919-707-6950 FAX 919-250-4119

SEE TITLE BLOCK

ORIGINAL BY: S.CALHOUN DATE: 7-25-2024
MODIFIED BY: DATE:
CHECKED BY: DATE:
FILE SPEC.:

Docusign Envelope ID: 5BEC07C3-22DF-4939-99FC-60F4D2BB7B09

8/17/99

PROJECT REFERENCE NO.	SHEET NO.
U-3609B	2C-6

NOTES:

CONSTRUCT STANDARD SIDEWALK 5' WIDE AND 4" THICK UNLESS OTHERWISE DENOTED ON PLANS.

PLACE A GROOVE JOINT 1" DEEP WITH ⅛" RADII IN THE CONCRETE SIDEWALK AT 5' INTERVALS. ONE ½" EXPANSION JOINT WILL BE REQUIRED AT 50' INTERVALS. A ½" EXPANSION JOINT WILL BE REQUIRED WHERE THE SIDEWALK JOINS ANY RIGID STRUCTURE.

SEE STD. DWG. 848.06 FOR CURB RAMP LOCATION REQUIREMENTS AND CONSTRUCTION GUIDELINES.

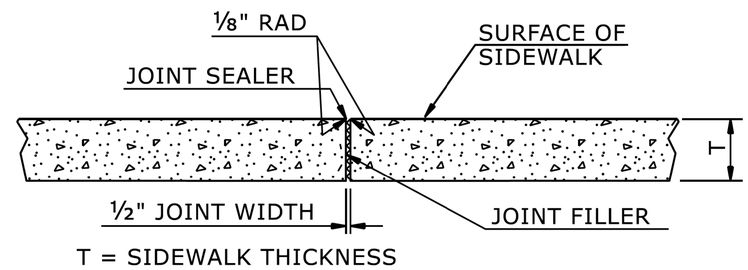

TRANSVERSE EXPANSION JOINT IN SIDEWALK

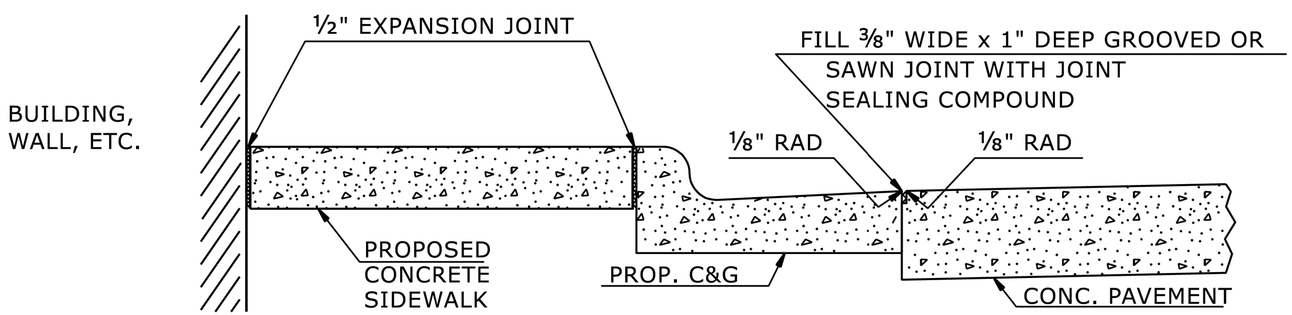

DETAILS SHOWING JOINTS IN CONCRETE SIDEWALK

STATE OF NORTH CAROLINA
DEPT. OF TRANSPORTATION
DIVISION OF HIGHWAYS
RALEIGH, N.C.

ROADWAY DETAIL DRAWING FOR
CONCRETE SIDEWALK

SHEET 1 OF 1

848D01

NORTH CAROLINA PROFESSIONAL SEAL 033144 ENGINEER NICOLE M. HACKLER 12/11/202

Signed by: Nicole M Hackler
5884323D3416 4C5...

DOCUMENT NOT CONSIDERED FINAL UNLESS ALL SIGNATURES COMPLETED

CONTRACTS STANDARDS AND DEVELOPMENT UNIT
Office 919-707-6950 FAX 919-250-4119

SEE TITLE BLOCK

ORIGINAL BY: S.CALHOUN DATE: 7-25-2024
MODIFIED BY: DATE:
CHECKED BY: DATE:
FILE SPEC.:

Docusign Envelope ID: 5BEC07C3-22DF-4939-99FC-60F4D2BB7B09

8/17/99

PROJECT REFERENCE NO.	SHEET NO.
U-3609B	2C-7

* - WHERE CLEAR SPACE IS CONSTRAINED ON TWO OR MORE SIDES, THE CLEAR SPACE SHALL BE 4' MINIMUM X 5' MINIMUM, WITH 5' PROVIDED IN THE DIRECTION OF THE PEDESTRIAN STREET CROSSING.

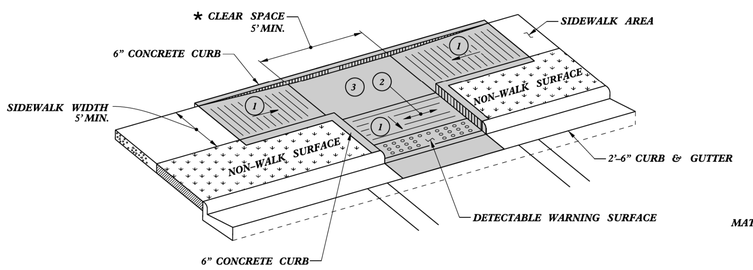

TYPE 3

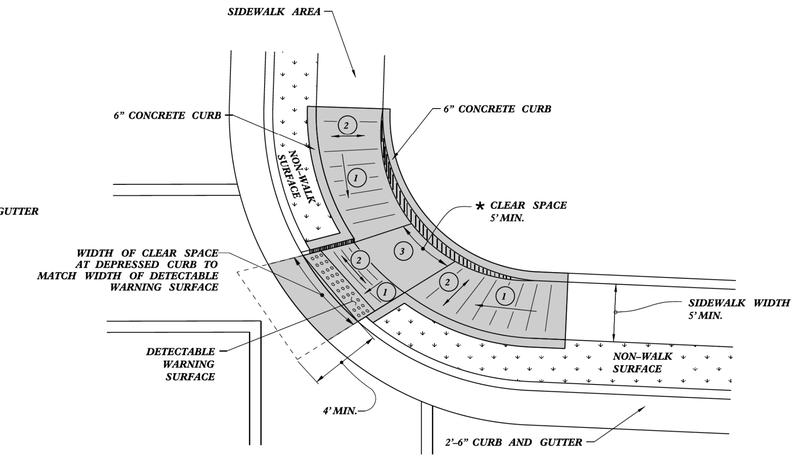

TYPE 3 MODIFIED
INSTALLATION IN A RADIUS

NOTES:
DETECTABLE WARNING SURFACE SHALL COVER 2'-0" LENGTH AND FULL WIDTH OF THE RAMP FLOOR AS SHOWN ON THE DETAILS.

DETECTABLE WARNING SURFACE SHALL CONTRAST VISIBLY WITH ADJOINING SURFACE, EITHER LIGHT-ON-DARK, OR DARK-ON-LIGHT SEQUENCE COVERING THE ENTIRE RAMP.

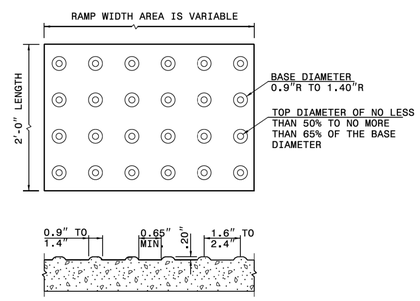

DETECTABLE WARNING SURFACE

1. 8.33% (12:1) MAX RAMP SLOPE
2. CROSS SLOPE: 2.00%
3. MAXIMUM CROSS SLOPE AND LONGITUDINAL SLOPE OF 2.00%.

PAY LIMITS FOR 1 CURB RAMP

STATE OF
NORTH CAROLINA
DEPT. OF TRANSPORTATION
DIVISION OF HIGHWAYS
RALEIGH, N.C.

ROADWAY DETAIL DRAWING
CURB RAMP
PARALLEL RAMP

NORTH CAROLINA PROFESSIONAL SEAL 033144 ENGINEER NICOLE M. HACKLER 12/11/2023

Signed by:
Nicole M Hackler
5884323D34164C5...

SHEET 9 OF13
848D06

DOCUMENT NOT CONSIDERED FINAL UNLESS ALL SIGNATURES COMPLETED

CONTRACTS STANDARDS AND DEVELOPMENT UNIT
Office 919-707-6950 FAX 919-250-4119

SEE TITLE BLOCK

ORIGINAL BY: S.CALHOUN DATE: 12-22-2023
MODIFIED BY: DATE:
CHECKED BY: DATE:
FILE SPEC.: special details\nmhackler\D0609.dgn

Docusign Envelope ID: 5BEC07C3-22DF-4939-99FC-60F4D2BB7B09

8/17/99

PROJECT REFERENCE NO.	SHEET NO.
U-3609B	2C-8

*NOTE: SEE STD. DWG. 846.01
FOR GENERAL NOTES

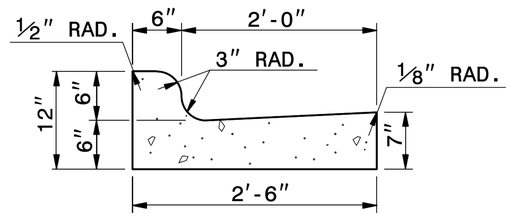

2'-6" CURB AND GUTTER

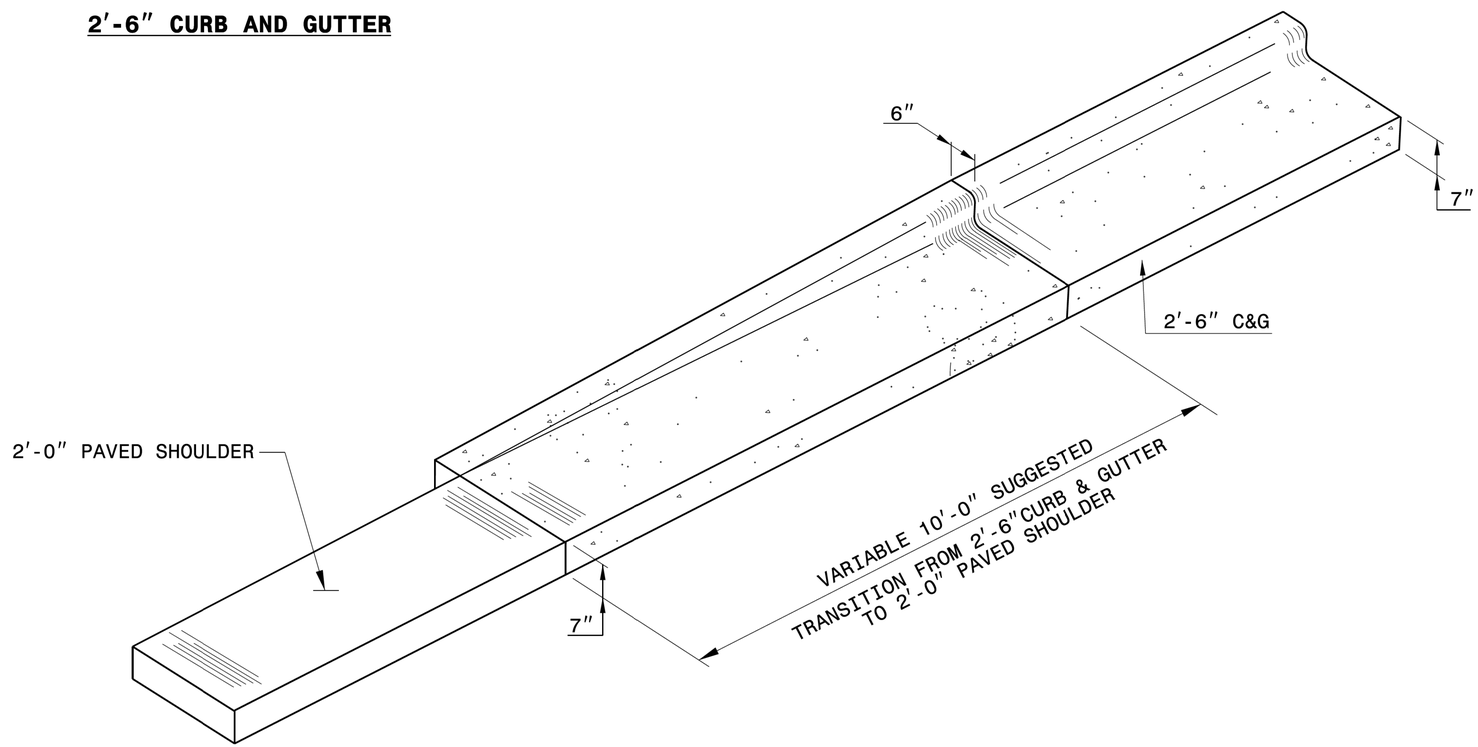

ISOMETRIC VIEW OF TRANSITION

NORTH CAROLINA PROFESSIONAL ENGINEER SEAL 33144 NICOLE M. HECKLER
12/11/2025

Signed by:
Nicole M Heckler
5884323D34164C5...

DOCUMENT NOT CONSIDERED FINAL
UNLESS ALL SIGNATURES COMPLETED

**CONTRACT STANDARDS
AND DEVELOPMENT UNIT**
Office 919-707-6950 FAX 919-250-4119

**DETAIL OF 10' TRANSITION
FROM 2'-6" CURB & GUTTER
TO 2'-0" PAVED SHOULDER**

ORIGINAL BY: _____ DATE: _____
MODIFIED BY: rnbritt DATE: 04-13-2016
CHECKED BY: _____ DATE: _____
FILE SPEC.: details/nbritt/english/misc/c&g transition sections.dgn

Docusign Envelope ID: 5BEC07C3-22DF-4939-99FC-60F4D2BB7B09

8/17/99

PROJECT REFERENCE NO.	SHEET NO.
U-3609B	2C-9

*NOTE: SEE STD. DWG. 846.01
FOR GENERAL NOTES

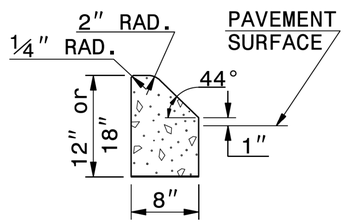

8" X 12" or 18" CONCRETE CURB

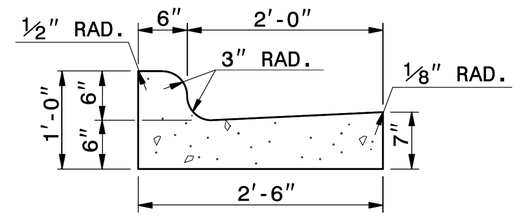

2'-6" CURB AND GUTTER

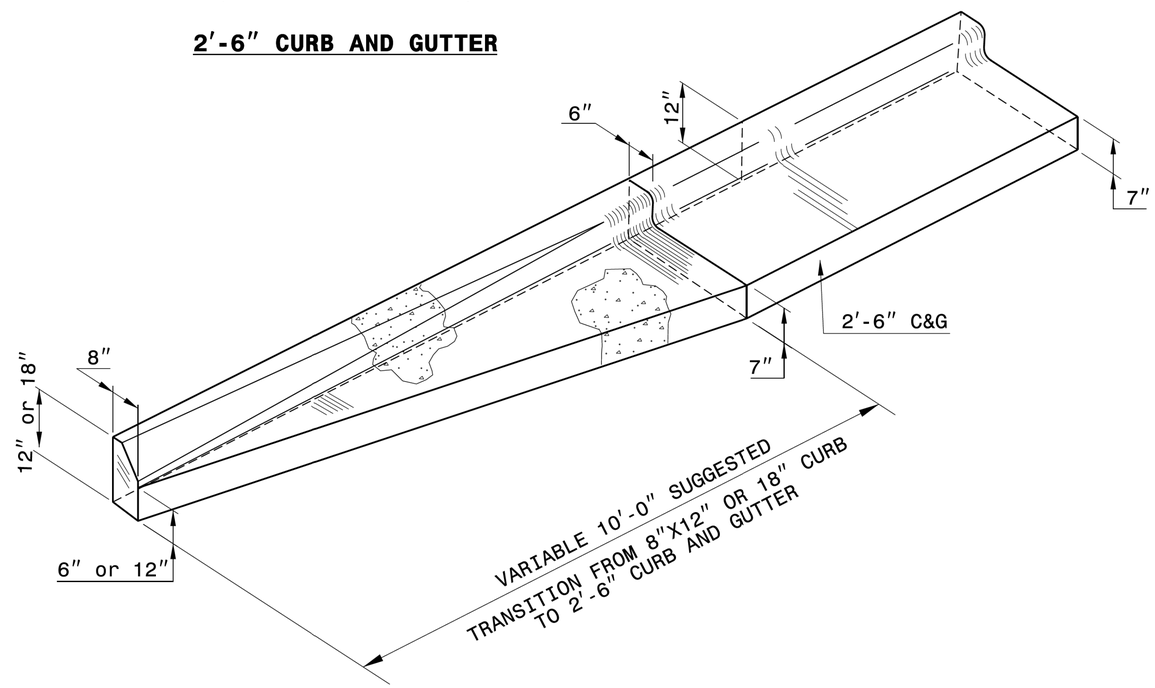

ISOMETRIC VIEW OF TRANSITION

NORTH CAROLINA PROFESSIONAL ENGINEER SEAL 33144 NICOLE M. HUCKLER
12/31/2025

Signed by:
Nicole M Huckler
5884323D34164C5...

DOCUMENT NOT CONSIDERED FINAL
UNLESS ALL SIGNATURES COMPLETED

**CONTRACT STANDARDS
AND DEVELOPMENT UNIT**
Office 919-707-6950 FAX 919-250-4119

**DETAIL OF 8"x 12"or 18" CURB
TO 2'-6" CURB & GUTTER
TRANSITION SECTION**

ORIGINAL BY: DATE:
MODIFIED BY: K. KEMPF DATE: 4-05-18
CHECKED BY: DATE:
FILE SPEC.: details/ericward/usr/details/stand/cgtransit.dgn

Docusign Envelope ID: 5BEC07C3-22DF-4939-99FC-60F4D2BB7B09

8/17/99

PROJECT REFERENCE NO.	SHEET NO.
U-3609B	2C-10

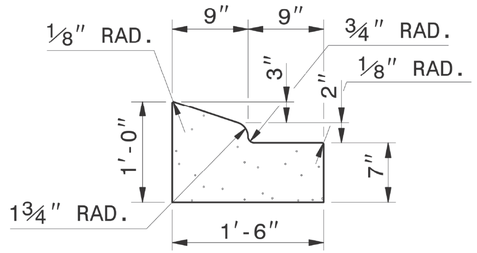

1'-6" CURB AND GUTTER

NOTE: SEE STD. DWG. 846.01 FOR ADDITIONAL CURB AND GUTTER INFORMATION.

SEE ROADWAY PLANS FOR LOCATION OF CURB TRANSITION.

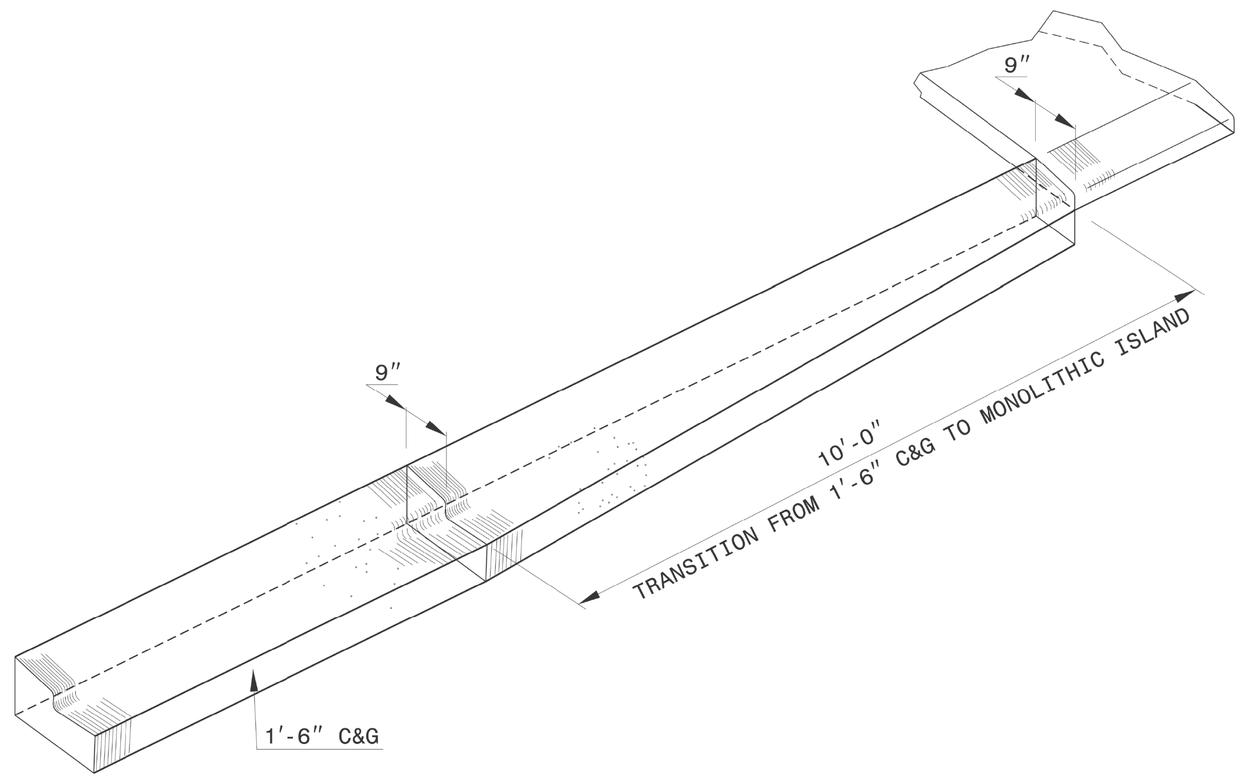

ISOMETRIC VIEW OF TRANSITIONING CURB & GUTTER

Signed by:
Nicole M Hackler
5884323D34164C5...

DOCUMENT NOT CONSIDERED FINAL UNLESS ALL SIGNATURES COMPLETED

CONTRACTS STANDARDS AND DEVELOPMENT UNIT
Office 919-707-6950 FAX 919-250-4119

DETAIL OF 1'-6" CURB & GUTTER TRANSITION SECTION

ORIGINAL BY: _____ DATE: _____
MODIFIED BY: KKEMPF DATE: 09-24-14
CHECKED BY: _____ DATE: _____
FILE SPEC.: kkempf/english/curb gutter tansition.dgn

Docusign Envelope ID: 5BEC07C3-22DF-4939-99FC-60F4D2BB7B09

8/17/99

PROJECT REFERENCE NO.	SHEET NO.
U-3609B	2C-11

NOTE: IF EXISTING GUARDRAIL IS LOWER THAN 29″, USE AN ADDITIONAL 12′-6″ LONG SECTION OF GUARDRAIL, FOR EVERY 1″ OF HEIGHT DIFFERENCE, TO TRANSITION FROM EXISTING GUARDRAIL TO PROPOSED 31″ GUARDRAIL.

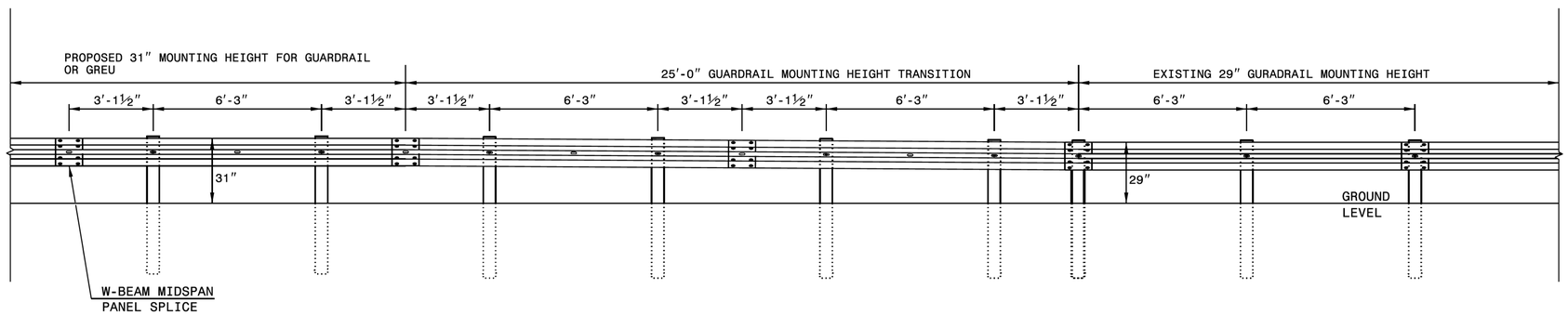

ELEVATION VIEW

TRANSITION FROM 29″ TO 31″ W-BEAM GUARDRAIL MOUNTING HEIGHT

STATE OF
NORTH CAROLINA
DEPT. OF TRANSPORTATION
DIVISION OF HIGHWAYS
RALEIGH, N.C.

ROADWAY DETAIL DRAWING FOR
GUARDRAIL INSTALLATION

SHEET 5 OF 9

862D02

NORTH CAROLINA PROFESSIONAL ENGINEER SEAL 033144 NICOLE M. HACKLER 12/11/202

Signed by:
Nicole M Hackler
5864323D34164C5...

DOCUMENT NOT CONSIDERED FINAL UNLESS ALL SIGNATURES COMPLETED

CONTRACTS STANDARDS AND DEVELOPMENT UNIT
Office 919-707-8950 FAX 919-250-4119

SEE TITLE BLOCK

ORIGINAL BY: K. Aldridge DATE: 02-25
MODIFIED BY: DATE:
CHECKED BY: DATE:
FILE SPEC.:

Docusign Envelope ID: 5BEC07C3-22DF-4939-99FC-60F4D2BB7B09

8/17/99

PROJECT REFERENCE NO.	SHEET NO.
U-3609B	2C-12

PLACE APPROVED BICYCLE FRIENDLY RAILINGS, FENCE, OR RUB RAILS IF SIDEPATH/SHARED-USE PATH IS LOCATED LESS THAN 4 FEET FROM THE POST

SEE THE ROADWAY DESIGN MANUAL (PART I CHAPTER 4 SECTION 4.14) FOR OFFSET DISTANCES FROM FACE OF GUARDRAIL AND BACK OF GUARDRAIL TO SIDEWALK OR SIDEPATH/SHARED-USE PATH

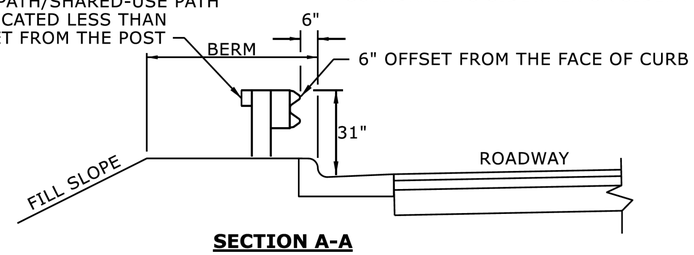

SECTION A-A

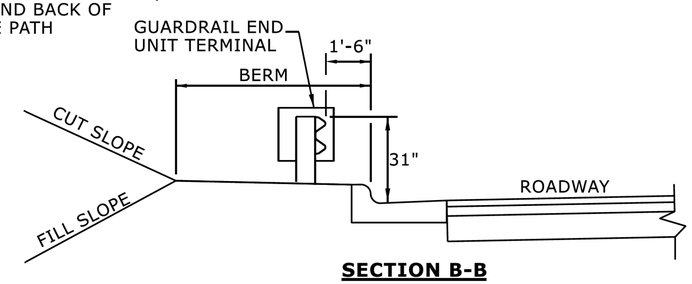

SECTION B-B

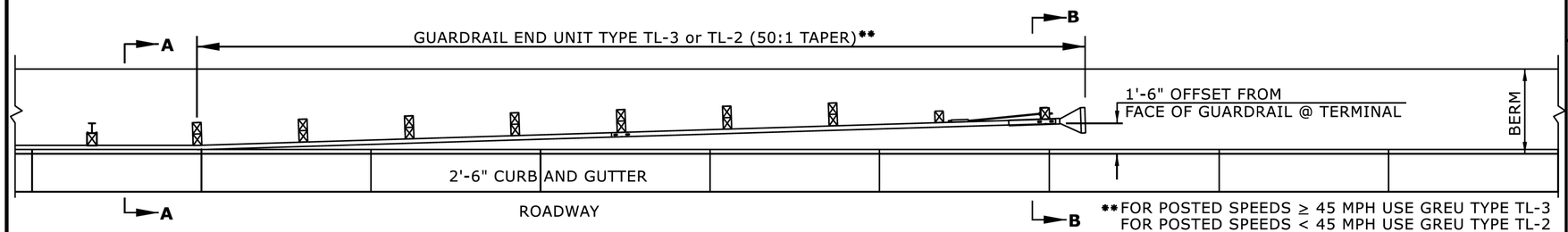

**FOR POSTED SPEEDS ≥ 45 MPH USE GREU TYPE TL-3
FOR POSTED SPEEDS < 45 MPH USE GREU TYPE TL-2

BICYCLE FRIENDLY RAILINGS, FENCE OR RUB RAIL SHOULD NOT BE PLACED WITHIN THE LIMITS OF THE STRUCTURAL ANCHOR OR END UNITS

GUARDRAIL 6" FROM THE FACE OF CURB

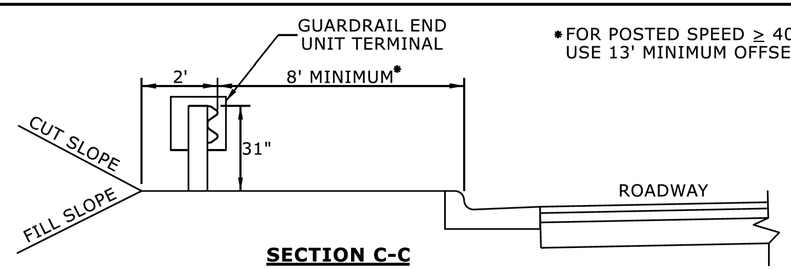

SECTION C-C

*FOR POSTED SPEED ≥ 40 MPH USE 13' MINIMUM OFFSET

SEE THE ROADWAY DESIGN MANUAL (PART I CHAPTER 4 SECTION 4.14) FOR OFFSET DISTANCES FROM FACE OF GUARDRAIL AND BACK OF GUARDRAIL TO SIDEWALK OR SIDEPATH/SHARED-USE PATH

**FOR POSTED SPEEDS ≥ 45 MPH USE GREU TYPE TL-3
FOR POSTED SPEEDS < 45 MPH USE GREU TYPE TL-2

BICYCLE FRIENDLY RAILINGS, FENCE OR RUB RAIL SHOULD NOT BE PLACED WITHIN THE LIMITS OF THE STRUCTURAL ANCHOR OR END UNITS

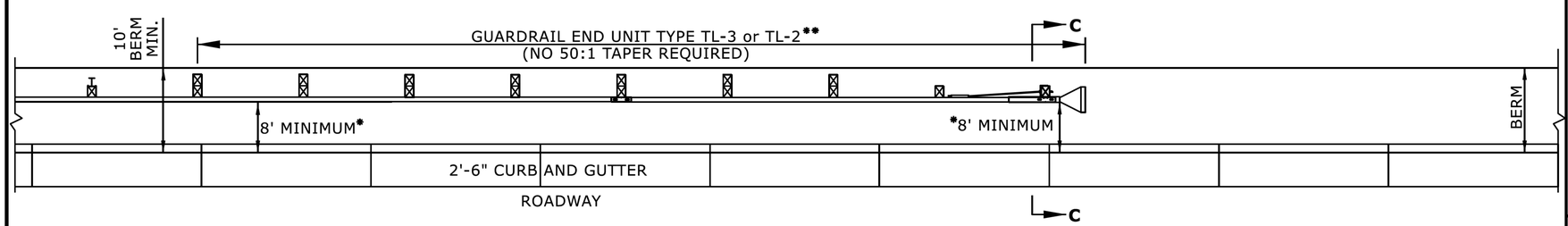

GUARDRAIL 8' OR GREATER OFFSET FROM FACE OF CURB

STATE OF
NORTH CAROLINA
DEPT. OF TRANSPORTATION
DIVISION OF HIGHWAYS
RALEIGH, N.C.

ROADWAY DETAIL DRAWING FOR
GUARDRAIL PLACEMENT
GUARDRAIL TREATMENT AT CURB AND GUTTER

SHEET 12 OF 15

862D01

NORTH CAROLINA PROFESSIONAL SEAL 033144 ENGINEER NICOLE M. HACKLER 12/31/2025

Signed by: Nicole M Hackler
5884323D3416 4C5...

DOCUMENT NOT CONSIDERED FINAL UNLESS ALL SIGNATURES COMPLETED

CONTRACTS STANDARDS AND DEVELOPMENT UNIT
Office 919-707-6950 FAX 919-250-4119

SEE TITLE BLOCK

ORIGINAL BY: S.CALHOUN DATE: 7-25-2024
MODIFIED BY: DATE:
CHECKED BY: DATE:
FILE SPEC.:

Docusign Envelope ID: 5BEC07C3-22DF-4939-99FC-60F4D2BB7B09

8/17/99

GROUNDWATER CONDITION (SEE NOTE 6)	H SHORING HEIGHT (FT)	SLOPE OR SURCHARGE CASE WITH NO TRAFFIC IMPACT					SURCHARGE CASE WITH TRAFFIC IMPACT				
		SHEET PILES		H-PILES WITH TIMBER LAGGING			SHEET PILES		H-PILES WITH TIMBER LAGGING		
		MINIMUM REQUIRED EMBEDMENT (FT)	MINIMUM REQUIRED SECTION MODULUS (IN^2/FT)	MINIMUM REQUIRED EMBEDMENT* (FT) (SEE NOTE 10)			MINIMUM REQUIRED EMBEDMENT (FT)	MINIMUM REQUIRED SECTION MODULUS (IN^2/FT)	MINIMUM REQUIRED EMBEDMENT* (FT) (SEE NOTE 10)		
				HP 10x42	HP 12x53	HP 14x73			HP 10x42	HP 12x53	HP 14x73
GROUNDWATER ELEVATION BEWTEEN BOTTOM OF SHORING AND PILE TIP	< 6	11.5	4.5	11.5	11.5	11.5	16.0	12.0	13.0	13.0	13.0
	7	13.0	7.0	13.0	13.0	13.0	17.0	14.5	14.5	14.5	14.5
	8	15.0	10.0	--	15.0	15.0	18.0	17.0	--	15.5	15.5
	9	17.0	14.0	--	17.0	17.0	19.0	20.0	--	17.0	17.0
	10	18.5	19.5	--	--	18.5	20.0	23.5	--	--	18.5
	11	20.5	26.0	--	--	--	21.0	28.0	--	--	20.0
	12	22.5	33.0	--	--	--	22.0	33.0	--	--	21.5
GROUNDWATER ELEVATION BELOW PILE TIP	< 6	7.5	3.0	8.0	8.0	8.0	11.0	10.0	9.5	9.5	9.5
	7	8.5	4.5	9.5	9.5	9.5	12.0	12.0	10.5	10.5	10.5
	8	10.0	6.5	10.5	10.5	10.5	12.5	14.0	11.5	11.5	11.5
	9	11.0	9.5	--	12.0	12.0	13.5	16.5	--	12.5	12.5
	10	12.5	13.0	--	--	13.5	14.0	19.5	--	13.5	13.5
	11	13.5	17.0	--	--	14.5	15.0	22.5	--	--	14.5
	12	15.0	21.5	--	--	16.0	16.0	25.5	--	--	15.5

MINIMUM REQUIRED EMBEDMENT AND SECTION MODULUS

*DO NOT USE H-PILES WITH TIMBER LAGGING FOR GROUNDWATER CONDITION, SHORING HEIGHT AND H-PILE SIZE SHOWN IF MINIMUM REQUIRED EMBEDMENT IS "--".

NOTES:

1. AT THE CONTRACTOR'S OPTION, USE STANDARD TEMPORARY SHORING AS NOTED IN THE PLANS.
2. FOR STANDARD TEMPORARY SHORING, SEE STANDARD SHORING PROVISION.
3. STANDARD TEMPORARY SHORING IS BASED ON THE FOLLOWING IN-SITU ASSUMED SOIL PARAMETERS:
   UNIT WEIGHT, γ = 120 PCF
   FRICTION ANGLE, φ = 30 DEGREES
   COHESION, c = 0 PSF
4. DO NOT USE STANDARD TEMPORARY SHORING IF ASSUMED SOIL PARAMETERS ARE NOT APPLICABLE.
5. DO NOT USE STANDARD TEMPORARY SHORING WHEN VERY LOOSE OR SOFT SOIL OR MUCK IS WITHIN THE EMBEDMENT DEPTH.
6. USE GROUNDWATER ELEVATION NOTED IN THE PLANS. IF NO GROUNDWATER ELEVATION IS SHOWN IN THE PLANS, USE "GROUNDWATER ELEVATION BETWEEN BOTTOM OF SHORING AND PILE TIP" FOR GROUNDWATER CONDITION. DO NOT USE STANDARD TEMPORARY SHORING IF GROUNDWATER IS ABOVE BOTTOM OF SHORING.
7. AT THE CONTRACTOR'S OPTION OR IF AVAILABLE CLEAR DISTANCE IS LESS THAN THE MINIMUM REQUIRED FOR CONCRETE BARRIER, SET BARRIER NEXT TO AND UP AGAINST TRAFFIC SIDE OF PILES AND USE "SURCHARGE CASE WITH TRAFFIC IMPACT".
8. AT THE CONTRACTOR'S OPTION OR IF AVAILABLE CLEAR DISTANCE IS LESS THAN 4' FOR TEMPORARY GUARDRAIL, ATTACH GUARDRAIL TO TRAFFIC SIDE OF PILES AS SHOWN IN THE PLANS AND USE "SURCHARGE CASE WITH TRAFFIC IMPACT".
9. MINIMUM REQUIRED EXTENSION IS 6" FOR "SLOPE OR SURCHARGE CASE WITH NO TRAFFIC IMPACT" AND 32" FOR "SURCHARGE CASE WITH TRAFFIC IMPACT".
10. MINIMUM REQUIRED EMBEDMENT FOR H-PILES WITH TIMBER LAGGING IS BASED ON DRIVEN H-PILES AT MAXIMUM 6' SPACING. AT THE CONTRACTOR'S OPTION, EMBEDMENT DEPTHS MAY BE REDUCED BY 25% FOR DRILLED-IN H-PILES.
11. SUBMIT A "STANDARD TEMPORARY SHORING SELECTION FORM" AT LEAST 7 DAYS BEFORE STARTING TEMPORARY SHORING CONSTRUCTION. UP TO 3 SHORING LOCATIONS MAY BE INCLUDED ON EACH FORM. STANDARD SHORING SELECTION FORMS ARE AVAILABLE FROM: connect.ncdot.gov/resources/Geological/Pages/Geotech_Forms_Details.aspx
12. CONTACT THE ENGINEER IF PILES DO NOT ATTAIN THE MINIMUM REQUIRED EMBEDMENT.

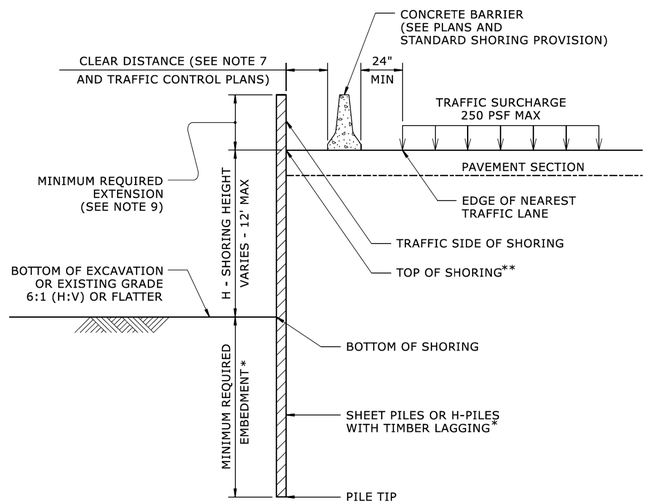

CONCRETE BARRIER

**TOP OF SHORING = EDGE OF PAVEMENT

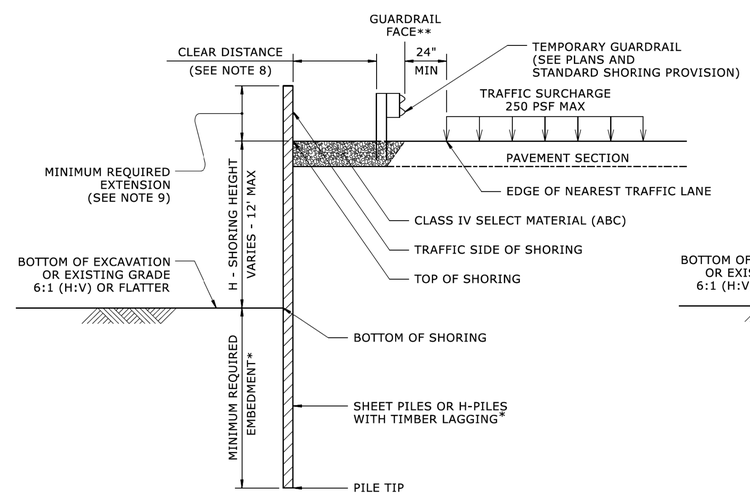

TEMPORARY GUARDRAIL

**GUARDRAIL FACE = EDGE OF PAVEMENT

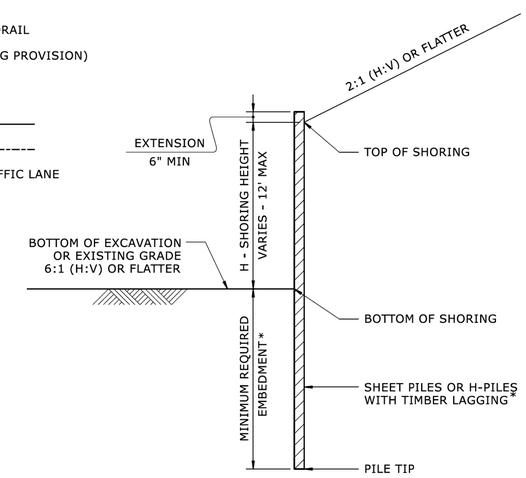

STANDARD TEMPORARY SHORING

(SLOPE CASE)
*SEE TABLE ABOVE.

STANDARD TEMPORARY SHORING

(SURCHARGE CASE)
*SEE TABLE ABOVE.

U-3609B
- | 2G-1

NORTH CAROLINA DEPARTMENT OF TRANSPORTATION

GEOTECHNICAL ENGINEERING UNIT

GEOTECHNICAL ENGINEER

SEAL 036283 NORTH CAROLINA PROFESSIONAL SEAL ENGINEER SCOTT HUNSUCKER 12/10/2025

DOCUSIGN SIGNATURE
DOCUMENT NOT CONSIDERED FINAL UNLESS ALL SIGNATURES COMPLETED

STANDARD DETAIL NO. 1801.01

GEOTECHNICAL STANDARD DETAIL FOR TEMPORARY SHORING

DATE: 02-18-2025

12/06/07

COMPUTED BY: AGI	DATE: 12/02/25
CHECKED BY: KNH	DATE: 12/02/25

PROJECT REFERENCE NO.	SHEET NO.
U-3609B	3B-1

STATE OF NORTH CAROLINA
DIVISION OF HIGHWAYS

PAVEMENT REMOVAL SUMMARY

SURVEY LINE	STATION	STATION	LOCATION LT/RT/CL	YD²
-L-	21+63	25+29	CL	699.28
-L-	30+20	31+31	CL	252.62
-L-	36+21	40+59	CL	877.26
-L-	50+36	54+54	CL	831.70
-L-	80+11	84+93	CL	863.62
-L-	93+06	98+43	CL	968.36
-L-	102+95	108+20	CL	1260.21
-L-	113+20	117+52	CL	895.42
-L-	122+30	123+40	RT	207.52
-Y11-/-Y12-	14+48	11+53		1145.73
-Y11-	23+50	24+38	LT	493.05
-Y13-	10+00	12+22	RT	376.50
-Y13-	29+20	29+70	CL	212.60
			TOTAL:	8,899.41
			SAY:	9,000

SUMMARY OF EARTHWORK
(IN CUBIC YARDS)

STATION	TO STATION	TOTAL UNCLASSIFIED	UNDERCUT	EMBANKMENT	BORROW	WASTE
PHASE I						
14+05.00 -L- LT1	15+50.00					
10+45.00 -Y1- RT1	19+50.00	73		570	497	
SUBTOTALS:		73		570	497	
14+05.00 -L- RT1	15+50.00	7		3		5
19+50.00 -Y1- RT2	23+50.00	81		26		55
SUBTOTALS:		88		28		60
15+50.00 -L- LT2	45+50.00	400		2,824	2,424	
10+45.00 -Y1- LT1	19+50.00	72		618	546	
11+70.00 -Y3-	12+69.62	30		90	60	
11+70.00 -Y4-	12+65.75	44		19		25
12+10.00 -Y7-	12+65.75	19		33	14	
SUBTOTALS:		565		3,582	3,042	25
15+50.00 -L- RT2	45+50.00	363		3,873	3,510	
19+50.00 -Y1- LT2	23+50.00	31		121	90	
10+34.25 -Y5-	11+20.00	32		64	32	
10+34.25 -Y6-	11+60.00	9		54	45	
10+34.25 -DWY1-	10+75.00	7		73	66	
SUBTOTALS:		442		4,183	3,741	
45+50.00 -L- LT3	75+50.00	3,598		7,810	4,261	49
11+50.00 -Y8-	12+65.75	323		8		316
10+90.00 -Y10- RT	13+60.16	868		14		854
SUBTOTALS:		4,789		7,831	4,261	1,218
45+50.00 -L- RT3	75+50.00	135		9,361	9,251	25
10+34.94 -Y9A-	10+85.00	9		16	7	
10+35.52 -Y9B-	11+00.00	9		20	11	
10+39.84 -Y11- RT1	28+00.00	500		1,399	899	
SUBTOTALS:		653		10,796	10,168	25
75+50.00 -L- LT4	105+50.00	467		6,358	5,904	13
10+90.00 -Y10- LT	13+60.16	542		5		537
10+70.00 -Y14-	11+59.06	46		25		21
SUBTOTALS:		1,055		6,387	5,904	571
75+50.00 -L- RT4	105+50.00	419		13,438	13,096	77
10+39.84 -Y11- LT1	16+75.00	117		1,044	927	
10+12.02 -Y12- LT1	12+00.00	8		484	476	
10+12.02 -Y12- RT1	14+95.13	135		456	321	
16+75.00 -Y11- LT2	28+00.00	71		2,710	2,639	
SUBTOTALS:		750		18,131	17,458	77
105+50.00 -L- LT5	125+00.00	36		5,036	5,001	1
SUBTOTALS:		36		5,036	5,001	1
105+50.00 -L- RT5	125+00.00	169		5,063	4,918	24
10+36.21 -Y15-	11+50.00	25		74	49	
SUBTOTALS:		194		5,136	4,966	24
PROJECT SUB TOTALS:		8,645		61,680	55,038	2,001

SUMMARY OF EARTHWORK (CONT.)
(IN CUBIC YARDS)

STATION	TO STATION	TOTAL UNCLASSIFIED	UNDERCUT	EMBANKMENT	BORROW	WASTE
PROJECT SUB TOTALS:		8,645		61,680	55,038	2,001
PHASE I (CONTINUED)						
10+25.00 -Y20- LT1	17+50.00	280		806	526	
10+00.00 -Y19- RT1	13+79.15	179		58		122
17+50.00 -Y20- LT2	24+22.73	587		204		383
10+00.00 -Y19- LT1	13+79.15	180		35		145
10+25.00 -Y20- RT1	24+22.73	984		734		250
SUBTOTALS:		2,210		1,836	526	900
PHASE II						
12+00.00 -Y12- LT2	14+95.13	73		85	12	
12+00.00 -Y13-	13+35.00	6		144	138	
28+50.00 -Y13-	29+20.00	6		4		2
SUBTOTALS:		85		232	149	2
PHASE III						
22+00 -L- MD_01	25+00.00	17		156	139	
30+50 -L- MD_02	31+00.00	3		30	27	
36+50 -L- MD_03	40+50.00	8		265	257	
50+50 -L- MD_04	54+50.00			509	509	
80+50 -L- MD_05	84+50.00	7		479	472	
93+50 -L- MD_06	98+00.00	7		636	629	
103+00 -L- MD_07A	105+50.00	8		286	278	
105+50 -L- MD_07B	108+00.00	2		341	339	
113+50 -L- MD_08	117+50.00	25		259	234	
SUBTOTALS:		77		2,961	2,884	
TOTAL:		11,017		66,709	58,596	2,903
MATERIAL FOR SHOULDER CONSTRUCTION				788	788	
LOSS DUE TO CLEARING & GRUBBING		-900			900	
WASTE IN LIEU OF BORROW					-2,043	-2,043
PROJECT TOTALS:		10,117		67,496	58,240	860
5% TO REPLACE TOP SOIL ON BORROW PIT					2,912	
GRAND TOTALS:		10,117		67,496	61,152	860
SAY:		10,400			61,400	

TOTAL SHALLOW UNDERCUT 3,750 CY
DDE 200 CY

PER GEOTECH RECOMMENDATION, ESTIMATED 2,350 CY OF UNDERCUT TO BE USED IN THE DISCRETION OF THE RESIDENT ENGINEER

Note: Earthwork quantities are calculated by Stantec. These earthwork quantities are based in part on subsurface data provided by Falcon Engineering.

Note: Approximate quantities only. Unclassified Excavation, Fine Grading, Clearing & Grubbing, and Removal of Existing Pavement will be paid for at the contract lump sum price for Grading.

"N" = DISTANCE FROM EDGE OF LANE TO FACE OF GUARDRAIL.
TOTAL SHOULDER WIDTH = DISTANCE FROM EDGE OF TRAVEL LANE TO SHOULDER BREAK POINT.
FLARE LENGTH = DISTANCE FROM LAST SECTION OF PARALLEL GUARDRAIL TO END OF GUARDRAIL.
W = TOTAL WIDTH OF FLARE FROM BEGINNING OF TAPER TO END OF GUARDRAIL.
G = GATING IMPACT ATTENUATOR TYPE 350
NG = NON-GATING IMPACT ATTENUATOR TYPE 350

GUARDRAIL SUMMARY

SURVEY LINE	BEG. STA.	END STA.	LOCATION	LENGTH			WARRANT POINT		"N" DIST. FROM E.O.L.	TOTAL SHOUL. WIDTH	FLARE LENGTH		W		ANCHORS							IMPACT ATTENUATOR TYPE 350			SINGLE FACED GUARDRAIL	REMOVE EXISTING GUARDRAIL	REMOVE AND STOCKPILE EXISTING GUARDRAIL	REMARKS
				STRAIGHT	SHOP CURVED	DOUBLE FACED	APPROACH END	TRAILING END			APPROACH END	TRAILING END	APPROACH END	TRAILING END	TYPE III	B-77	GREU, TL-3	GREU, TL-2	CAT-1	TES	AT-1	EA	G	NG				
-L-	53+10	55+42	RT	237.50	-	-	-	55+66	2'	-	50'	-	1	-	-	-	1	-	1	-	-	-	-	-	-	191.20'	-	
-L-	54+95	57+25	LT	237.50	-	-	55+67	-	2'	-	-	50'	-	1	-	-	1	-	1	-	-	-	-	-	-	202.00'	-	
-Y13-	29+25	29+25	CL	37.50	-	-	-	-	5'	8'	-	-	-	-	-	-	-	-	-	2	-	-	-	-	-	-	-	HAMMERHEAD TURNAROUND
			SUBTOTAL	512.50													2		2	2						393.20'		
LESS DEDUCTIONS FOR ANCHORS			GREU, TL-3	2 @ 50' EA=	-100.00																							
		CAT-1	2 @ 6.25' EA=	-12.50																								
			PROJECT TOTALS =	400.00																								
			SAY =	412.50																								
			ADDITIONAL POSTS =	5																								

12/2/2025
U:\Roadway\Proj\U3609B_rdy_3B-1.dgn
dlsten

Docusign Envelope ID: 5BEC07C3-22DF-4939-99FC-60F4D2BB7B09

8/17/99

COMPUTED BY:	Karen Hefner, PE	DATE:	Rev 11/24/25
CHECKED BY:	H Turner, PE	DATE:	Rev 11/24/25

NORTH CAROLINA DEPARTMENT OF TRANSPORTATION
DIVISION OF HIGHWAYS

PROJECT NO.	SHEET NO.
U-3609B	3D-1

Note: Invert Elevations indicated are for Bid Purposes only and shall not be used for project construction stakeout. See "Standard Specifications For Roads and Structures, Section 300-5".

LIST OF PIPES, ENDWALLS, ETC. (FOR PIPES 48 INCHES & UNDER)

LINE & STATION / SIZE / THICKNESS OR GAUGE	OFFSET	STRUCTURE NUMBER FROM	STRUCTURE NUMBER TO	TOP ELEVATION FT.	INVERT ELEVATION FT.	INVERT ELEVATION FT.	% MINIMUM REQUIRED SLOPE	Side Drain Pipe (RCP, CSP, HDPE, PVC, or PP PIPE) 15	18	24	DO NOT USE RCP	DO NOT USE CSP	DO NOT USE HDPE	DO NOT USE PVC	DO NOT USE PP PIPE	C. S. PIPE 12	15	18	24	30	36	42	48
																.064	.064	.064	.064	.079	.079	.109	.109
L 19+39	34 RT	0401		137.8																			
		0401	0423		135.0	134.4																	
L 17+68	49 LT	0437		136.9																			
		0437	0402	134.7	134.0																		
L 17+80	32 LT	0402		138.4																			
		0402	0404		132.5	132.1																	
L 16+60	32 LT	0403		139.1																			
		0403	0402		132.9	132.5																	
L 19+00	32 LT	0404		137.8																			
		0404	0406		132.1	131.4	0.6																
L 19+40	52 RT	0405		137.3																			
		0405	0401		135.8	135.0																	
Y3 12+17.5	30 LT	0438						24															
L 21+66	49 LT	0439						28															
L 21+50	32 LT	0406		136.4																			
		0406	0501		131.3	130.2																	
L 22+50	34 RT	0407		136.4																			
		0407	0502		134.2	132.8																	
Y1 17+08	20 LT	0410		137.9																			
		0410	0431		133.9	133.5																	
Y1 16+27	20 LT	0411		137.7																			
		0411	0410		135.1	134.8																	
Y1 17+08	20 RT	0412		137.9																			
		0412	0410		134.0	133.9																	
Y1 16+16	20 RT	0413		137.7																			
		0413	0436		135.4	135.0																	
Y1 16+09	20 RT	0414		137.7																			
		0414	0413		135.4	135.4																	
Y1 16+00	20 LT	0415		137.7																			
		0415	0411		135.2	135.1																	
Y1 14+72	20 RT	0416		138.0																			
		0416	0419		135.7	135.3																	
Y1 14+70	20 LT	0417		138.0																			
		0417	0415		135.7	135.2																	
Y1 15+33	31 RT	0418		138.1																			
		0418	0436		135.2	134.8	0.3																
Y1 14+77	29 RT	0419		137.3																			
		0419	0418		135.3	135.2																	
Y1 13+66	35 RT	0420		137.7																			
		0420	0419		135.9	135.3																	
Y1 18+90	40 LT	0421		139.3																			
		0421	0431		134.0	133.5																	
L 19+00	34 RT	0423		137.7																			
		0423	0404		134.4	133.0	0.4																
L 18+00	50 RT	0424		138.7																			
		0424	0425		135.7	135.5																	
L 18+00	34 RT	0425		138.5																			
		0425	0423		135.5	135.1																	
SHEET TOTALS								52															

LINE & STATION / SIZE / THICKNESS OR GAUGE	R. C. PIPE CLASS III 12	15	18	24	30	36	42	48	R. C. PIPE CLASS IV 12	15	18	24	30	36	42	48	R. C. PIPE CLASS V 12	15	18	24	30	36	42	48
L 19+39																								
											40													
L 17+68																								
										24														
L 17+80																								
												120												
L 16+60																								
												124												
L 19+00																								
												252												
L 19+40																								
											20													
Y3 12+17.5																								
L 21+66																								
L 21+50																								
												384												
L 22+50																								
										304														
Y1 17+08																								
												184												
Y1 16+27																								
										84														
Y1 17+08																								
												44												
Y1 16+16																								
										12														
Y1 16+09																								
										8														
Y1 16+00																								
										28														
Y1 14+72																								
										12														
Y1 14+70																								
										132														
Y1 15+33																								
											84													
Y1 14+77																								
											56													
Y1 13+66																								
										108														
Y1 18+90																								
										28														
L 19+00																								
											68													
L 18+00																								
										20														
L 18+00																								
										104														
SHEET TOTALS										864	268	724	384											

LINE & STATION / SIZE / THICKNESS OR GAUGE	ENDWALLS STD. 838.01 OR STD. 838.11 (UNLESS NOTED OTHERWISE) CY	REINFORCED ENDWALLS CY	DRAINAGE STRUCTURE MASONRY CY	QUANTITIES FOR DRAINAGE STRUCTURES (NOTE: TOTAL LIN. FT. FOR PAY QUANTITY SHALL BE A + (1.3 X B)) 0' THRU 5' EACH	A: 5' THRU 10' LIN. FT.	B: 10' AND ABOVE LIN. FT.	C.B. STD. 840.01 OR STD. 840.02	FRAME, GRATES, AND HOOD STD. 840.03 GRATE TYPE E	F	G	CONCRETE TRANSITIONAL SECTION D.I. STD. 852.04 OR STD. 852.06	C.B. STD. 852.05	D.I. STD. 840.14 OR STD. 840.15	D.I. FRAME AND GRATES STD. 840.16	G.D.I. TYPE "A" STD. 840.17 OR STD. 840.26	G.D.I. TYPE "B" STD. 840.18 OR STD. 840.27	G.D.I. TYPE "D" STD. 840.19 OR STD. 840.28	G.D.I. (N.S. SAG) FRAME W/ 2 GRATES STD. 840.24	G.D.I. (N.S. FLAT) FRAME W/ GRATE STD. 840.29	G.D.I. (N.S. FLAT) FRAME W/ 2 GRATES STD. 840.29	DRIVEWAY D.I. STD. 840.30	FRAME W/ GRATE FOR DRIVEWAY STD. 840.30	J.B. STD. 840.31 OR STD. 840.32	ANGLED VANE GRATES AND FRAMES STD. 840.33	T.B.J.B. STD. 840.34	T.B.D.I. STD. 840.35	T.B.D.I. FOR STEEL GRATES STD. 840.36	STEEL FRAME WITH TWO GRATES STD. 840.37	TEMP STEEL PLATE COVER MASONRY DRAINAGE	M.H. STD. 840.51, STD. 840.52, OR STD. 840.53	M.H. FRAME AND COVER STD. 840.54	ADJUST M.H.	PIPE CLEANOUT EA	FLOWABLE FILL CY	CONCRETE COLLARS CL. "B" STD. 840.72 CY	CONCRETE AND BRICK PIPE PLUG STD. 840.71 CY	PIPE REMOVAL LIN. FT.	REMARKS
L 19+39				1			1		1																															
L 17+68				1								1	1																											Remove & Replace
L 17+80				1	1.0		1			1																														
L 16+60				1	1.2		1			1																														
L 19+00				1	0.7		1			1																														
L 19+40																																								
Y3 12+17.5																																								
L 21+66																																								
L 21+50				1	0.1		1			1																														
L 22+50				1			1			1																														Min Depth; See Detail 2C-1
Y1 17+08				1			1		1																															
																																								Min Depth; See Detail 2C-1
Y1 16+27				1			1	1																																Min Depth; See Detail 2C-1
Y1 17+08				1			1			1																														
Y1 16+16				1			1			1																														
Y1 16+09				1			1	1																																Min Depth; See Detail 2C-1
Y1 16+00				1			1	1																																Min Depth; See Detail 2C-1
Y1 14+72				1			1		1																															
Y1 14+70				1			1			1																														Min Depth; See Detail 2C-1
Y1 15+33				1								1	1																											Min Depth, See Detail 2C-2
Y1 14+77				1			1			1																														Min Depth; See Detail 2C-1
Y1 13+66				1															1			1																		Min Depth,
Y1 18+90				1	0.3									1		1																								
L 19+00				1			1			1																														
L 18+00				1			1			1																														
L 18+00				1			1			1																														
SHEET TOTALS				22	3.3		18	3	7	8			2	2		1		1		1						1													

ABBREVIATIONS

C.A.A.	CORRUGATED ALUMINIUM ALLOY
C.B.	CATCH BASIN
C.S.	CORRUGATED STEEL
D.I.	DROP INLET
G.D.I.	GRATED DROP INLET
H.D.P.E.	HIGH DENSITY POLYETHYLENE
J.B.	JUNCTION BOX
M.H.	MANHOLE
N.S.	NARROW SLOT
P.V.C.	POLYVINYL CHLORIDE
R.C.	REINFORCED CONCRETE
T.B.D.I.	TRAFFIC BEARING DROP INLET
T.B.J.B.	TRAFFIC BEARING JUNCTION BOX
W.S.	WIDE SLOT

Docusign Envelope ID: 5BEC07C3-22DF-4939-99FC-60F4D2BB7B09

8/17/99

COMPUTED BY:	Karen Hefner, PE	DATE:	Rev 12/02/25
CHECKED BY:	H Turner, PE	DATE:	Rev 12/02/25

NORTH CAROLINA DEPARTMENT OF TRANSPORTATION
DIVISION OF HIGHWAYS

PROJECT NO.	SHEET NO.
U-3609B	3D-2

Note: Invert Elevations indicated are for Bid Purposes only and shall not be used for project construction stakeout. See "Standard Specifications For Roads and Structures, Section 300-5".

LIST OF PIPES, ENDWALLS, ETC. (FOR PIPES 48 INCHES & UNDER)

ABBREVIATIONS

C.A.A.	CORRUGATED ALUMINIUM ALLOY
C.B.	CATCH BASIN
C.S.	CORRUGATED STEEL
D.I.	DROP INLET
G.D.I.	GRATED DROP INLET
H.D.P.E.	HIGH DENSITY POLYETHYLENE
J.B.	JUNCTION BOX
M.H.	MANHOLE
N.S.	NARROW SLOT
P.V.C.	POLYVINYL CHLORIDE
R.C.	REINFORCED CONCRETE
T.B.D.I.	TRAFFIC BEARING DROP INLET
T.B.J.B.	TRAFFIC BEARING JUNCTION BOX
W.S.	WIDE SLOT

LINE & STATION / SIZE / THICKNESS OR GAUGE	OFFSET		STRUCTURE NUMBER FROM	STRUCTURE NUMBER TO	TOP ELEVATION FT.	INVERT ELEVATION FT.	INVERT ELEVATION FT.	MINIMUM REQUIRED SLOPE %	Side Drain Pipe (RCP, CSP, HDPE, PVC, or PP PIPE) 15	18	24	DO NOT USE RCP	DO NOT USE CSP	DO NOT USE HDPE	DO NOT USE PVC	DO NOT USE PP PIPE
L 16+00	32	LT	0430		139.2											
			0430	0403		133.0	132.9									
Y1 18+90	24	LT	0431		139.1											
			0431	0430		133.5	133.0									
Y1 22+94	27	RT	0432						20							
Y1 23+42	27	RT	0433						24							
Y1 17+08	29	RT	0435		137.4											
			0435	0412		134.0	134.0									
Y1 16+17	29	RT	0436		137.3											
			0436	0435		134.2	134.0									
Y1 20+87	32	RT	0440						52							
Y1 21+47	28	RT	0441						24							
L 25+30	36	LT	0501		135.4											
			0501	0516		130.2	128.8									
L 25+50	36	RT	0502		135.0											
			0502	0503		132.8	130.1									
L 28+15	36	RT	0503		132.4											
			0503	0504		130.1	127.7									
L 30+70	36	RT	0504		129.9											
			0504	0505		127.7	125.4	0.4								
L 33+00	36	RT	0505		127.6											
			0505	0506		125.4	122.2	0.8								
L 36+25	36	RT	0506		124.4											
			0506	0608		122.0	120.1	0.4								
L 28+25	36	LT	0507		132.3											
			0507	0508		128.5	126.0									
L 30+82	36	LT	0508		129.8											
			0508	0509		125.3	122.7									
L 33+40	36	LT	0509		127.2											
			0509	0510		122.7	120.1									
L 36+00	36	LT	0510		124.6											
			0510	0601		120.1	119.0									
L 36+00	2	RT	0511		125.8											
			0511	0510		122.8	121.5									
L 36+00	63	LT	0512		124.3											
			0512	0510		122.4	121.9	0.7								
L 27+00	60	LT	0513		133.3											
L 27+95	60	LT	0514		132.3											
			0513	0514		131.1	130.0									
L 27+87	36	LT	0516		132.6											
			0514	0516		130.0	129.6									
			0516	0507		128.8	128.5									
L 33+50	62	LT	0515		126.7											
			0515	0509		124.4	124.0									
L 28+72	59	RT	0517		131.6											
L 29+90	60	RT	0518		130.6											
L 30+70	51	RT	0519		129.3											
			0517	0518		129.3	128.3									
			0518	0519		128.3	127.1									
							SHEET TOTALS		120							

FROM	TO	C. S. PIPE 12 (.064)	15 (.064)	18 (.064)	24 (.064)	30 (.079)	36 (.079)	42 (.109)	48 (.109)	R. C. PIPE CLASS III 12	15	18	24	30	36	42	48
0430																	
0430	0403																
0431																	
0431	0430																
0432																	
0433																	
0435																	
0435	0412																
0436																	
0436	0435																
0440																	
0441																	
0501																	
0501	0516																
0502																	
0502	0503																
0503																	
0503	0504																
0504																	
0504	0505																
0505																	
0505	0506																
0506																	
0506	0608																
0507																	
0507	0508																
0508																	
0508	0509																
0509																	
0509	0510																
0510																	
0510	0601																
0511																	
0511	0510																
0512																	
0512	0510																
0513																	
0514																	
0513	0514																
0516																	
0514	0516																
0516	0507																
0515																	
0515	0509																
0517																	
0518																	
0519																	
0517	0518																
0518	0519																
SHEET TOTALS																	

FROM	TO	R. C. PIPE CLASS IV 12	15	18	24	30	36	42	48	R. C. PIPE CLASS V 12	15	18	24	30	36	42	48
0430																	
0430	0403				60												
0431																	
0431	0430				68												
0432																	
0433																	
0435																	
0435	0412				12												
0436																	
0436	0435				92												
0440																	
0441																	
0501																	
0501	0516					296											
0502																	
0502	0503		268														
0503																	
0503	0504		256														
0504																	
0504	0505		232														
0505																	
0505	0506		328														
0506																	
0506	0608			376													
0507																	
0507	0508					260											
0508																	
0508	0509						260										
0509																	
0509	0510						264										
0510																	
0510	0601						200										
0511																	
0511	0510		40														
0512																	
0512	0510		28														
0513																	
0514																	
0513	0514		100														
0516																	
0514	0516		28														
0516	0507					40											
0515																	
0515	0509		28														
0517																	
0518																	
0519																	
0517	0518		120														
0518	0519		84														
SHEET TOTALS			1512	376	232	596	724										

FROM	TO	ENDWALLS STD. 838.01 OR STD. 838.11 (UNLESS NOTED OTHERWISE) CY	REINFORCED ENDWALLS CY	DRAINAGE STRUCTURE MASONRY CY	QUANTITIES FOR DRAINAGE STRUCTURES (NOTE: TOTAL LIN. FT. FOR PAY QUANTITY SHALL BE A + (1.3 X B)) 0' THRU 5' EACH	A 5' THRU 10' LIN. FT.	B 10' AND ABOVE LIN. FT.	C.B. STD. 840.01 OR STD. 840.02	FRAME, GRATES, AND HOOD STD. 840.03 GRATE TYPE E	F	G	
0430					1	1.2		1			1	
0430	0403											
0431					1	0.7		1		1		
0431	0430											
0432												
0433												
0435					1			1		1		
0435	0412											
0436					1			1		1		
0436	0435											
0440												
0441												
0501					1	0.3		1			1	
0501	0516											
0502					1			1		1		
0502	0503											
0503					1			1		1		
0503	0504											
0504					1			1		1		
0504	0505											
0505					1			1		1		
0505	0506											
0506					1			1		1		
0506	0608											
0507					1			1			1	
0507	0508											
0508					1			1			1	
0508	0509											
0509					1			1			1	
0509	0510											
0510					1			1			1	
0510	0601											
0511					1							
0511	0510											
0512					1							
0512	0510											
0513					1							
0514					1							
0513	0514											
0516					1			1			1	
0514	0516											
0516	0507											
0515					1							
0515	0509											
0517					1							
0518					1							
0519					1							
0517	0518											
0518	0519											
SHEET TOTALS					23	2.2		15		8	7	

FROM	TO	CONCRETE TRANSITIONAL SECTION D.I. STD. 852.04 OR STD. 852.06	C.B. STD. 852.05	D.I. STD. 840.14 OR STD. 840.15	D.I. FRAME AND GRATES STD. 840.16	G.D.I. TYPE "A" STD. 840.17 OR STD. 840.26	G.D.I. TYPE "B" STD. 840.18 OR STD. 840.27	G.D.I. TYPE "D" STD. 840.19 OR STD. 840.28	G.D.I. (N.S. SAG) FRAME W/ 2 GRATES STD. 840.24	G.D.I. (N.S. FLAT) FRAME W/ GRATE STD. 840.29	G.D.I. (N.S. FLAT) FRAME W/ 2 GRATES STD. 840.29	DRIVEWAY D.I. STD. 840.30	FRAME W/ GRATE FOR DRIVEWAY STD. 840.30	J.B. STD. 840.31 OR STD. 840.32	ANGLED VANE GRATES AND FRAMES STD. 840.33	T.B.J.B. STD. 840.34	T.B.D.I. STD. 840.35	T.B.D.I. FOR STEEL GRATES STD. 840.36	STEEL FRAME WITH TWO GRATES STD. 840.37	TEMP STEEL PLATE COVER MASONRY DRAINAGE	
0430																					
0430	0403																				
0431																					
0431	0430																				
0432																					
0433																					
0435																					
0435	0412																				
0436																					
0436	0435																				
0440																					
0441																					
0501																					
0501	0516																				
0502																					
0502	0503																				
0503																					
0503	0504																				
0504																					
0504	0505																				
0505																					
0505	0506																				
0506																					
0506	0608																				
0507																					
0507	0508																				
0508																					
0508	0509																				
0509																					
0509	0510																				
0510																					
0510	0601																				
0511		1		1	1																
0511	0510																				
0512											1						1				
0512	0510																				
0513				1	1																
0514				1	1																
0513	0514																				
0516																					
0514	0516																				
0516	0507																				
0515				1	1																
0515	0509																				
0517				1	1																
0518				1	1																
0519				1	1																
0517	0518																				
0518	0519																				
SHEET TOTALS		1		7	7						1						1				

FROM	TO	M.H. STD. 840.51, STD. 840.52, OR STD. 840.53	M.H. FRAME AND COVER STD. 840.54	ADJUST M.H.	PIPE CLEANOUT EA	FLOWABLE FILL CY	CONCRETE COLLARS CL. "B" STD. 840.72 CY	CONCRETE AND BRICK PIPE PLUG STD. 840.71 CY	PIPE REMOVAL LIN. FT.	REMARKS
0430										
0430	0403									
0431										
0431	0430									
0432										
0433										
0435										
0435	0412									
0436										Min Depth; See Detail 2C-1
0436	0435									
0440										Driveway
0441										Driveway
0501										
0501	0516									
0502										Min Depth; See Detail 2C-1
0502	0503									
0503										Min Depth; See Detail 2C-1
0503	0504									
0504										Min Depth; See Detail 2C-1
0504	0505									
0505										Min Depth; See Detail 2C-1
0505	0506									
0506										Min Depth; See Detail 2C-1
0506	0608									
0507										Min Depth; See Detail 2C-1
0507	0508									
0508										Min Depth; See Detail 2C-1
0508	0509									
0509										Min Depth; See Detail 2C-1
0509	0510									
0510										Min Depth; See Detail 2C-1
0510	0601									
0511										
0511	0510									
0512										
0512	0510									
0513										
0514										
0513	0514									
0516										Min Depth; See Detal 2C-1
0514	0516									
0516	0507									
0515										
0515	0509									
0517										
0518										
0519										
0517	0518									
0518	0519									
SHEET TOTALS										

Docusign Envelope ID: 5BEC07C3-22DF-4939-99FC-60F4D2BB7B09

8/17/99

COMPUTED BY:	Karen Hefner, PE	DATE:	Rev 11/24/25
CHECKED BY:	H Turner, PE	DATE:	Rev 11/24/25

NORTH CAROLINA DEPARTMENT OF TRANSPORTATION
DIVISION OF HIGHWAYS

PROJECT NO.	SHEET NO.
U-3609B	3D-3

Note: Invert Elevations indicated are for Bid Purposes only and shall not be used for project construction stakeout. See "Standard Specifications For Roads and Structures, Section 300-5".

LIST OF PIPES, ENDWALLS, ETC. (FOR PIPES 48 INCHES & UNDER)

LINE & STATION	OFFSET		STRUCTURE NUMBER FROM	TO	TOP ELEVATION FT.	INVERT ELEVATION FT.	INVERT ELEVATION FT.	MINIMUM REQUIRED SLOPE %	R. C. PIPE CLASS IV 15	R. C. PIPE CLASS IV 18	R. C. PIPE CLASS IV 24	R. C. PIPE CLASS IV 36	DRAINAGE STRUCTURES 0' THRU 5' EACH	A 5' THRU 10' LIN. FT.	C.B. STD. 840.01 OR STD. 840.02	GRATE TYPE E	GRATE TYPE F	GRATE TYPE G	D.I. STD. 840.14 OR STD. 840.15	D.I. FRAME AND GRATES STD. 840.16	REMARKS
			0519	0504		127.1	126.9		16												
L 33+00	53	RT	0520		127.0								1						1	1	Min Depth; See Detail 2C-2
L 32+60	58	RT	0521		127.3								1						1	1	Min Depth; See Detail 2C-2
L 33+50	51	RT	0522		127.0								1						1	1	Min Depth; See Detail 2C-2
			0521	0520		125.6	125.0		44												
			0522	0520		125.3	125.0		52												
			0520	0505		125.0	124.6		20												
L 35+90	65	RT	0523		123.9								1						1	1	Min Depth; See Detail 2C-2
			0523	0506		122.2	122.0		32												
L 38+00	36	LT	0601		123.5								1		1			1			Min Depth; See Detail 2C-1
			0601	0602		119.0	118.6					116									
L 39+15	36	LT	0602		123.1								1		1			1			Min Depth; See Detail 2C-1
			0602	0614		118.6	117.8					228									
L 39+12	54	LT	0603		121.7								1						1	1	
			0603	0602		119.8	119.0	0.5	20												
L 40+00	36	RT	0608		122.6								1		1		1				Min Depth; See Detail 2C-1
			0608	0609		120.1	119.2	0.5		252											
L 42+50	36	RT	0609		121.7								1		1		1				Min Depth; See Detail 2C-1
			0609	0610		118.6	117.9				200										
L 44+50	36	RT	0610		121.0								1		1			1			
			0610	0611		117.9	117.1				96										
L 45+44	36	RT	0611		120.8								1		1	1					
			0611	0620		117.1	117.0				8										
L 46+57	43	RT	0613		120.9								1		1			1			
			0613	0622		116.7	116.4				156										
L 41+40	36	LT	0614		122.3								1		1			1			Min Depth; See Detail 2C-1
			0614	0615		117.8	116.7					208									
L 43+45	36	LT	0615		121.1								1		1			1			Min Depth; See Detail 2C-1
			0615	0618		116.7	116.4					108									
L 45+44	36	LT	0616		120.8								1		1	1					
			0616	0619		115.9	115.7					32									
L 46+50	36	LT	0617		121.0								1	0.5	1		1				
			0617	0628		115.5	115.4	0.3				52									
L 44+50	44	LT	0618		120.8								1		1			1			Min Depth; See Detail 2C-1
			0618	0616		116.4	115.9					96									
L 45+74	36	LT	0619		120.9								1	0.1	1		1				Min Depth; See Detail 2C-1
			0619	0617		115.7	115.5	0.3				80									
L 45+49	36	RT	0620		120.8								1		1	1					
			0620	0613		117.0	116.7				112										
L 48+12	36	RT	0622		121.5								1	0.1	1		1				
			0622	0701		116.4	116.0				280										
L 43+45	51	LT	0623		121.3								1						1	1	
			0623	0615		119.1	118.4		16												
L 45+71	55	LT	0624		121.0								1						1	1	
			0624	0619		118.8	117.9		20												
							SHEET TOTALS		220	252	852	920	22	0.7	15	3	5	7	7	7	

Other column headings (no entries on this sheet): SIZE; THICKNESS OR GAUGE; Side Drain Pipe (RCP, CSP, HDPE, PVC, or PP PIPE) 15, 18, 24, DO NOT USE RCP, DO NOT USE CSP, DO NOT USE HDPE, DO NOT USE PVC, DO NOT USE PP PIPE; C. S. PIPE 12 (.064), 15 (.064), 18 (.064), 24 (.064), 30 (.079), 36 (.079), 42 (.109), 48 (.109); R. C. PIPE CLASS III 12, 15, 18, 24, 30, 36, 42, 48; R. C. PIPE CLASS IV 12, 30, 42, 48; R. C. PIPE CLASS V 12, 15, 18, 24, 30, 36, 42, 48; ENDWALLS STD. 838.01 OR STD. 838.11 (UNLESS NOTED OTHERWISE) CY; REINFORCED ENDWALLS CY; DRAINAGE STRUCTURE MASONRY CY; QUANTITIES FOR DRAINAGE STRUCTURES (NOTE: TOTAL LIN. FT. FOR PAY QUANTITY SHALL BE A + (1.3 X B)) B 10' AND ABOVE LIN. FT.; FRAME, GRATES, AND HOOD STD. 840.03; CONCRETE TRANSITIONAL SECTION D.I. STD. 852.04 OR STD. 852.06, C.B. STD. 852.05; G.D.I. TYPE "A" STD. 840.17 OR STD. 840.26; G.D.I. TYPE "B" STD. 840.18 OR STD. 840.27; G.D.I. TYPE "D" STD. 840.19 OR STD. 840.28; G.D.I. (N.S. SAG) FRAME W/ 2 GRATES STD. 840.24; G.D.I. (N.S. FLAT) FRAME W/ GRATE STD. 840.29; G.D.I. (N.S. FLAT) FRAME W/ 2 GRATES STD. 840.29; DRIVEWAY D.I. STD. 840.30; FRAME W/ GRATE FOR DRIVEWAY STD. 840.30; J.B. STD. 840.31 OR STD. 840.32; ANGLED VANE GRATES AND FRAMES STD. 840.33; T.B.J.B. STD. 840.34; T.B.D.I. STD. 840.35; T.B.D.I. FOR STEEL GRATES STD. 840.36; STEEL FRAME WITH TWO GRATES STD. 840.37; TEMP STEEL PLATE COVER MASONRY DRAINAGE; M.H. STD. 840.51, STD. 840.52, OR STD. 840.53; M.H. FRAME AND COVER STD. 840.54; ADJUST M.H.; PIPE CLEANOUT EA; FLOWABLE FILL CY; CONCRETE COLLARS CL. "B" STD. 840.72 CY; CONCRETE AND BRICK PIPE PLUG STD. 840.71 CY; PIPE REMOVAL LIN. FT.

ABBREVIATIONS

C.A.A.	CORRUGATED ALUMINIUM ALLOY
C.B.	CATCH BASIN
C.S.	CORRUGATED STEEL
D.I.	DROP INLET
G.D.I.	GRATED DROP INLET
H.D.P.E.	HIGH DENSITY POLYETHYLENE
J.B.	JUNCTION BOX
M.H.	MANHOLE
N.S.	NARROW SLOT
P.V.C.	POLYVINYL CHLORIDE
R.C.	REINFORCED CONCRETE
T.B.D.I.	TRAFFIC BEARING DROP INLET
T.B.J.B.	TRAFFIC BEARING JUNCTION BOX
W.S.	WIDE SLOT

Docusign Envelope ID: 5BEC07C3-22DF-4939-99FC-60F4D2BB7B09

8/17/99

COMPUTED BY:	Karen Hefner, PE	DATE:	Rev 11/24/25
CHECKED BY:	H Turner, PE	DATE:	Rev 11/24/25

NORTH CAROLINA DEPARTMENT OF TRANSPORTATION
DIVISION OF HIGHWAYS

PROJECT NO.	SHEET NO.
U-3609B	3D-4

Note: Invert Elevations indicated are for Bid Purposes only and shall not be used for project construction stakeout. See "Standard Specifications For Roads and Structures, Section 300-5".

LIST OF PIPES, ENDWALLS, ETC. (FOR PIPES 48 INCHES & UNDER)

LINE & STATION / SIZE / THICKNESS OR GAUGE	OFFSET	STRUCTURE NUMBER FROM	STRUCTURE NUMBER TO	TOP ELEVATION FT.	INVERT ELEVATION FT.	INVERT ELEVATION FT.	MINIMUM REQUIRED SLOPE %
L 47+00	51 LT	0625		120.6			
		0625	0628		118.4	118.2	
L 41+40	49 LT	0627		122.7			
		0627	0614		120.5	119.6	
L 47+00	36 LT	0628		121.2			
		0628	0630		115.4	115.2	0.4
L 50+25	36 LT	0629		120.6			
		0629	0708		114.6	113.0	0.4
L 48+12	36 LT	0630		121.5			
		0630	0629		115.2	114.6	0.4
L 36+99	55 LT	0632		122.8			
L 38+00	57 LT	0633		121.8			
		0632	0633		122.6	119.6	
		0633	0601		119.6	119.0	
L 50+90	36 RT	0701		119.9			
		0701	0702		116.0	112.7	
L 53+50	36 RT	0702		116.2			
		0702	0703		112.7	111.5	
L 54+75	36 RT	0703		115.3			
		0703	0741		111.5	110.5	0.3
L 55+74	36 RT	0704		113.8			
		0704	0716		112.0	112.0	
L 57+00	36 RT	0705		115.4			
		0705	0743		112.4	111.5	
L 60+51	36 RT	0706		118.5			
		0706	0705		115.5	112.4	
L 63+00	36 RT	0707		120.2			
		0707	0706		116.9	115.5	
L 52+40	36 LT	0708		117.7			
		0708	0719		113.0	111.8	0.4
L 54+55	36 LT	0709		115.4			
		0709	0740		110.6	109.0	0.4
L 55+75	36 LT	0710		113.8			
		0710	0717		112.0	112.0	
L 56+65	36 LT	0711		115.2			
		0711	0712		111.0	110.5	
L 57+55	36 LT	0712		115.8			
		0712	0722		110.5	109.4	
L 59+00	79 LT	0713		116.2			
		0713	0723		113.4	110.6	
L 61+50	36 LT	0714		119.2			
		0714	0721		116.1	114.8	
L 64+00	36 LT	0715		120.3			
		0715	0730		117.3	117.0	
L 55+79	36 RT	0716		113.8			
		0716	0743		112.0	111.5	
L 55+79	36 LT	0717		114.1			
		0717	0711		112.0	111.0	
L 53+06	76 LT	0718		115.0			
SHEET TOTALS							

FROM	TO	Side Drain Pipe (RCP, CSP, HDPE, PVC, or PP PIPE) 15	18	24	DO NOT USE RCP	DO NOT USE CSP	DO NOT USE HDPE	DO NOT USE PVC	DO NOT USE PP PIPE	C. S. PIPE 12 (.064)	15 (.064)	18 (.064)	24 (.064)	30 (.079)	36 (.079)	42 (.109)	48 (.109)
0625																	
0625	0628																
0627																	
0627	0614																
0628																	
0628	0630																
0629																	
0629	0708																
0630																	
0630	0629																
0632																	
0633																	
0632	0633																
0633	0601																
0701																	
0701	0702																
0702																	
0702	0703																
0703																	
0703	0741																
0704																	
0704	0716																
0705																	
0705	0743																
0706																	
0706	0705																
0707																	
0707	0706																
0708																	
0708	0719																
0709																	
0709	0740																
0710																	
0710	0717																
0711																	
0711	0712																
0712																	
0712	0722																
0713																	
0713	0723																
0714																	
0714	0721																
0715																	
0715	0730																
0716																	
0716	0743																
0717																	
0717	0711																
0718																	
SHEET TOTALS																	

FROM	TO	R. C. PIPE CLASS III 12	15	18	24	30	36	42	48	R. C. PIPE CLASS IV 12	15	18	24	30	36	42	48	R. C. PIPE CLASS V 12	15	18	24	30	36	42	48
0625																									
0625	0628										16														
0627																									
0627	0614										16														
0628																									
0628	0630														112										
0629																									
0629	0708														216										
0630																									
0630	0629														216										
0632																									
0633																									
0632	0633										104														
0633	0601										24														
0701																									
0701	0702												264												
0702																									
0702	0703												128												
0703																									
0703	0741												16												
0704																									
0704	0716										8														
0705																									
0705	0743										72														
0706																									
0706	0705										352														
0707																									
0707	0706										252														
0708																									
0708	0719														76										
0709																									
0709	0740						48																		
0710																									
0710	0717										8														
0711																									
0711	0712										92														
0712																									
0712	0722										36														
0713																									
0713	0723										36														
0714																									
0714	0721										176														
0715																									
0715	0730										52														
0716																									
0716	0743										52														
0717																									
0717	0711										88														
0718																									
SHEET TOTALS							48				1384		408		620										

FROM	TO	ENDWALLS STD. 838.01 OR STD. 838.11 (UNLESS NOTED OTHERWISE) CY	REINFORCED ENDWALLS CY	DRAINAGE STRUCTURE MASONRY CY	QUANTITIES FOR DRAINAGE STRUCTURES (NOTE: TOTAL LIN. FT. FOR PAY QUANTITY SHALL BE A + (1.3 X B)) 0' THRU 5' EACH	A 5' THRU 10' LIN. FT.	B 10' AND ABOVE LIN. FT.	C.B. STD. 840.01 OR STD. 840.02	FRAME, GRATES, AND HOOD STD. 840.03 GRATE TYPE E	F	G		CONCRETE TRANSITIONAL SECTION D.I. STD. 852.04 OR STD. 852.06	C.B. STD. 852.05	D.I. STD. 840.14 OR STD. 840.15	D.I. FRAME AND GRATES STD. 840.16
0625					1										1	1
0625	0628															
0627					1										1	1
0627	0614															
0628					1	0.8		1		1						
0628	0630															
0629					1	0.9		1			1					
0629	0708															
0630					1	1.3		1		1						
0630	0629															
0632					1										1	1
0633					1										1	1
0632	0633															
0633	0601															
0701					1			1		1						
0701	0702															
0702					1			1		1						
0702	0703															
0703					1			1		1						
0703	0741															
0704					1			1	1							
0704	0716															
0705					1			1			1					
0705	0743															
0706					1			1			1					
0706	0705															
0707					1			1			1					
0707	0706															
0708					1			1			1					
0708	0719															
0709					1			1			1					
0709	0740															
0710					1			1	1							
0710	0717															
0711					1			1		1						
0711	0712															
0712					1	0.3		1		1						
0712	0722															
0713					1			1		1						
0713	0723															
0714					1			1		1						
0714	0721															
0715					1			1		1						
0715	0730															
0716					1			1	1							
0716	0743															
0717					1			1	1							
0717	0711															
0718																
SHEET TOTALS					24	3.3		20	4	10	6				4	4

FROM	TO	G.D.I. TYPE "A" STD. 840.17 OR STD. 840.26	G.D.I. TYPE "B" STD. 840.18 OR STD. 840.27	G.D.I. TYPE "D" STD. 840.19 OR STD. 840.28	G.D.I. (N.S. SAG) FRAME W/ 2 GRATES STD. 840.24	G.D.I. (N.S. FLAT) FRAME W/ GRATE STD. 840.29	G.D.I. (N.S. FLAT) FRAME W/ 2 GRATES STD. 840.29	DRIVEWAY D.I. STD. 840.30	FRAME W/ GRATE FOR DRIVEWAY STD. 840.30	J.B. STD. 840.31 OR STD. 840.32	ANGLED VANE GRATES AND FRAMES STD. 840.33	T.B.J.B. STD. 840.34	T.B.D.I. STD. 840.35	T.B.D.I. FOR STEEL GRATES STD. 840.36	STEEL FRAME WITH TWO GRATES STD. 840.37	TEMP STEEL PLATE COVER MASONRY DRAINAGE		M.H. STD. 840.51, STD. 840.52, OR STD. 840.53	M.H. FRAME AND COVER STD. 840.54	ADJUST M.H.	PIPE CLEANOUT EA	FLOWABLE FILL CY	CONCRETE COLLARS CL. "B" STD. 840.72 CY	CONCRETE AND BRICK PIPE PLUG STD. 840.71 CY	PIPE REMOVAL LIN. FT.	REMARKS
0625																										
0625	0628																									
0627																										
0627	0614																									
0628																										
0628	0630																									
0629																										
0629	0708																									
0630																										
0630	0629																									
0632																										
0633																										
0632	0633																									
0633	0601																									
0701																										
0701	0702																									
0702																										
0702	0703																									
0703																										
0703	0741																									
0704																										
0704	0716																									
0705																										
0705	0743																									
0706																										
0706	0705																									
0707																										
0707	0706																									
0708																										
0708	0719																									
0709																										
0709	0740																									
0710																										
0710	0717																									
0711																										
0711	0712																									
0712																										
0712	0722																									
0713																										
0713	0723																									
0714																										
0714	0721																									
0715																										
0715	0730																									
0716																										
0716	0743																									
0717																										
0717	0711																									
0718																										
SHEET TOTALS																										

ABBREVIATIONS

C.A.A.	CORRUGATED ALUMINIUM ALLOY
C.B.	CATCH BASIN
C.S.	CORRUGATED STEEL
D.I.	DROP INLET
G.D.I.	GRATED DROP INLET
H.D.P.E.	HIGH DENSITY POLYETHYLENE
J.B.	JUNCTION BOX
M.H.	MANHOLE
N.S.	NARROW SLOT
P.V.C.	POLYVINYL CHLORIDE
R.C.	REINFORCED CONCRETE
T.B.D.I.	TRAFFIC BEARING DROP INLET
T.B.J.B.	TRAFFIC BEARING JUNCTION BOX
W.S.	WIDE SLOT

Docusign Envelope ID: 5BEC07C3-22DF-4939-99FC-60F4D2BB7B09

8/17/99

COMPUTED BY:	Karen Hefner, PE	DATE:	Rev 11/24/25
CHECKED BY:	H Turner, PE	DATE:	Rev 11/24/25

NORTH CAROLINA DEPARTMENT OF TRANSPORTATION
DIVISION OF HIGHWAYS

PROJECT NO.	SHEET NO.
U-3609B	3D-5

Note: Invert Elevations indicated are for Bid Purposes only and shall not be used for project construction stakeout. See "Standard Specifications For Roads and Structures, Section 300-5".

LIST OF PIPES, ENDWALLS, ETC. (FOR PIPES 48 INCHES & UNDER)

LINE & STATION / SIZE / THICKNESS OR GAUGE	OFFSET	STRUCTURE NUMBER FROM	STRUCTURE NUMBER TO	TOP ELEVATION FT.	INVERT ELEVATION FT.	INVERT ELEVATION FT.	MINIMUM REQUIRED SLOPE %	Side Drain Pipe (RCP, CSP, HDPE, PVC, or PP PIPE) 15	18	24	DO NOT USE RCP	DO NOT USE CSP	DO NOT USE HDPE	DO NOT USE PVC	DO NOT USE PP PIPE	C. S. PIPE 12	15	18	24	30	36	42	48
																.064	.064	.064	.064	.079	.079	.109	.109
		0718	0719		115.0	113.6																	
L 53+13	36 LT	0719		116.6																			
		0719	0709		111.8	110.6	0.4																
L 59+75	36 LT	0721		118.2																			
		0721	0725		114.8	111.1																	
		0726																					
		0726	0727		106.2																		
		0727																					
L 56+30	36 RT	0743		115.1																			
		0743	0720		111.5	110.4	0.3																
Y8 12+25	24 RT	0750		115.5																			
		0750	0708		115.5	114.7																	
L 68+00	36 RT	0801		121.6																			
		0801	0821		119.3	118.6																	
L 70+00	37 RT	0802		122.2																			
		0802	0801		120.0	119.3																	
L 72+00	37 RT	0803		122.9																			
		0803	0802		120.6	120.0																	
L 66+00	36 LT	0804		120.9																			
		0804	0730		116.2	115.2																	
L 70+00	38 LT	0805		122.2																			
		0805	0820		117.7	117.6																	
L 71+50	38 LT	0806		122.7																			
		0806	0805		119.0	118.4																	
L 76+50	38 RT	0807		123.1																			
		0807	0808		120.6	120.4																	
L 77+18	38 RT	0808		123.0																			
		0808	0825		120.4	120.3																	
L 78+00	38 LT	0809		122.8																			
		0809	0813		119.8	119.7																	
L 69+29	43 LT	0810		122.3																			
		0810	0814		117.3	117.0																	
L 70+00	52 LT	0811		124.0																			
		0811	0820		118.4	117.6																	
L 67+91	54 LT	0812		120.8																			
		0812	0814		118.1	117.8																	
L 78+44	38 LT	0813		122.9																			
		0813	0934		119.7	119.2	0.5																
L 67+91	38 LT	0814		121.8																			
		0814	0804		117.0	116.2																	
L 76+75	38 LT	0815		122.7																			
		0815	0816		120.2	120.1																	
L 77+00	38 LT	0816		122.7																			
		0816	0824		120.1	120.0																	
Y10 13+10	52 RT	0817		122.7																			
		0817	0819		120.3	120.0																	
Y10 13+51	38 LT	0818		122.8																			
		0818	0841		120.5	120.4																	
L 74+15	38 LT	0819		123.6																			
						SHEET TOTALS																	

STRUCTURE NUMBER FROM	TO	R. C. PIPE CLASS III 12	15	18	24	30	36	42	48	R. C. PIPE CLASS IV 12	15	18	24	30	36	42	48	R. C. PIPE CLASS V 12	15	18	24	30	36	42	48
0718	0719										44														
0719																									
0719	0709														144										
0721																									
0721	0725										52														
0726																									
0726	0727														124										
0727																									
0743																									
0743	0720										24														
0750																									
0750	0708										44														
0801																									
0801	0821										204														
0802																									
0802	0801										204														
0803																									
0803	0802										204														
0804																									
0804	0730											152													
0805																									
0805	0820										8														
0806																									
0806	0805										152														
0807																									
0807	0808										68														
0808																									
0808	0825										20														
0809																									
0809	0813											44													
0810																									
0810	0814											140													
0811																									
0811	0820											8													
0812																									
0812	0814										20														
0813																									
0813	0934											156													
0814																									
0814	0804											192													
0815																									
0815	0816										28														
0816																									
0816	0824										32														
0817																									
0817	0819										44														
0818																									
0818	0841										56														
0819																									
SHEET TOTALS											1204	156	536		268										

STRUCTURE NUMBER FROM	TO	ENDWALLS STD. 838.01 OR STD. 838.11 (UNLESS NOTED OTHERWISE) CY	REINFORCED ENDWALLS CY	DRAINAGE STRUCTURE MASONRY CY	QUANTITIES FOR DRAINAGE STRUCTURES NOTE: TOTAL LIN. FT. FOR PAY QUANTITY SHALL BE A + (1.3 X B) 0' THRU 5' EACH	A 5' THRU 10' LIN. FT.	B 10' AND ABOVE LIN. FT.	C.B. STD. 840.01 OR STD. 840.02	FRAME, GRATES, AND HOOD STD. 840.03 GRATE TYPE E	F	G	CONCRETE TRANSITIONAL SECTION D.I. STD. 852.04 OR STD. 852.06	C.B. STD. 852.05	D.I. STD. 840.14 OR STD. 840.15	D.I. FRAME AND GRATES STD. 840.16	G.D.I. TYPE "A" STD. 840.17 OR STD. 840.26	G.D.I. TYPE "B" STD. 840.18 OR STD. 840.27	G.D.I. TYPE "D" STD. 840.19 OR STD. 840.28	G.D.I. (N.S. SAG) FRAME W/ 2 GRATES STD. 840.24	G.D.I. (N.S. FLAT) FRAME W/ GRATE STD. 840.29	G.D.I. (N.S. FLAT) FRAME W/ 2 GRATES STD. 840.29	DRIVEWAY D.I. STD. 840.30	FRAME W/ GRATE FOR DRIVEWAY STD. 840.30	J.B. STD. 840.31 OR STD. 840.32	ANGLED VANE GRATES AND FRAMES STD. 840.33	T.B.J.B. STD. 840.34	T.B.D.I. STD. 840.35	T.B.D.I. FOR STEEL GRATES STD. 840.36	STEEL FRAME WITH TWO GRATES STD. 840.37	TEMP STEEL PLATE COVER MASONRY DRAINAGE	M.H. STD. 840.51, STD. 840.52, OR STD. 840.53	M.H. FRAME AND COVER STD. 840.54	ADJUST M.H.	PIPE CLEANOUT EA	FLOWABLE FILL CY	CONCRETE COLLARS CL. "B" STD. 840.72 CY	CONCRETE AND BRICK PIPE PLUG STD. 840.71 CY	PIPE REMOVAL LIN. FT.	REMARKS
0718	0719				1			1			1																														
0719	0709																																								
0721					1			1		1																															
0721	0725																																								
0726		3.400																																							EW for Single 36" - Rdwy Std 838.01
0726	0727																																								
0727		3.400																																							EW for Single 36" - Rdwy Std 838.01
0743					1			1			1																														
0743	0720																																								
0750																																									
0750	0708																																								
0801					1			1			1																														Min Depth; See Detail 2C-1
0801	0821																																								
0802					1			1			1																														Min Depth; See Detail 2C-1
0802	0801																																								
0803					1			1			1																														Min Depth; See Detail 2C-1
0803	0802																																								
0804					1			1			1																														
0804	0730																																								
0805					1			1			1																														
0805	0820																																								
0806					1			1			1																														
0806	0805																																								
0807					1			1			1																														Min Depth; See Detail 2C-1
0807	0808																																								
0808					1			1	1																																
0808	0825																																								
0809					1			1			1																														Min Depth; See Detail 2C-1
0809	0813																																								
0810																																			1						Adjust ~ 1.0 ft
0810	0814																																								
0811																																									
0811	0820																																								
0812					1									1	1																										
0812	0814																																								
0813					1			1			1																														Min Depth; See Detail 2C-1
0813	0934																																								
0814					1			1			1																														
0814	0804																																								
0815					1			1				1																													Min Depth; See Detail 2C-1
0815	0816																																								
0816					1			1				1																													Min Depth; See Detail 2C-1
0816	0824																																								
0817					1			1	1																																
0817	0819																																								
0818					1			1	1																																Min Depth; See Detail 2C-1
0818	0841																																								
0819					1			1			1																														
SHEET TOTALS		6.800			20			19	3	9	7			1	1																				1						

ABBREVIATIONS

C.A.A.	CORRUGATED ALUMINIUM ALLOY
C.B.	CATCH BASIN
C.S.	CORRUGATED STEEL
D.I.	DROP INLET
G.D.I.	GRATED DROP INLET
H.D.P.E.	HIGH DENSITY POLYETHYLENE
J.B.	JUNCTION BOX
M.H.	MANHOLE
N.S.	NARROW SLOT
P.V.C.	POLYVINYL CHLORIDE
R.C.	REINFORCED CONCRETE
T.B.D.I.	TRAFFIC BEARING DROP INLET
T.B.J.B.	TRAFFIC BEARING JUNCTION BOX
W.S.	WIDE SLOT

Docusign Envelope ID: 5BEC07C3-22DF-4939-99FC-60F4D2BB7B09

8/17/99

COMPUTED BY:	Karen Hefner, PE	DATE:	Rev 11/24/25
CHECKED BY:	H Turner, PE	DATE:	Rev 11/24/25

NORTH CAROLINA DEPARTMENT OF TRANSPORTATION
DIVISION OF HIGHWAYS

PROJECT NO.	SHEET NO.
U-3609B	3D-6

Note: Invert Elevations indicated are for Bid Purposes only and shall not be used for project construction stakeout. See "Standard Specifications For Roads and Structures, Section 300-5".

LIST OF PIPES, ENDWALLS, ETC. (FOR PIPES 48 INCHES & UNDER)

LINE & STATION (SIZE / THICKNESS OR GAUGE)	OFFSET	STRUCTURE NUMBER FROM	STRUCTURE NUMBER TO	TOP ELEVATION FT.	INVERT ELEVATION FT.	INVERT ELEVATION FT.	MINIMUM REQUIRED SLOPE %	Side Drain Pipe (RCP, CSP, HDPE, PVC, or PP PIPE) 15	18	24	DO NOT USE RCP	DO NOT USE CSP	DO NOT USE HDPE	DO NOT USE PVC	DO NOT USE PP PIPE	C. S. PIPE 12 (.064)	15 (.064)	18 (.064)	24 (.064)	30 (.079)	36 (.079)	42 (.109)	48 (.109)
		0819	0806		120.0	119.0																	
L 69+97	45 LT	0820		123.0																			
L 66+00	36 RT	0821		120.9																			
		0821	0835		118.6	118.5	0.3																
Y10 12+50	38 LT	0822		122.4																			
		0822	0818		121.0	120.5																	
Y10 12+50	40 RT	0823		121.9																			
		0823	0817		120.5	120.3																	
L 77+31	38 LT	0824		122.7																			
		0824	0809		120.0	119.8																	
L 77+35	37 RT	0825		123.0																			
		0825	0826		120.3	120.0																	
L 78+50	37 RT	0826		123.4																			
		0826	0830		120.0	119.9																	
L 76+97	55 LT	0827		123.1																			
		0827	0816		121.7	120.1																	
L 78+00	56 LT	0828		122.4																			
		0828	0809		121.0	120.5																	
Y11 13+68	38 LT	0829						24															
L 76+00	38 LT	0841		122.9																			
		0841	0815		120.4	120.2																	
L 81+00	10 RT	0901		124.0																			
		0901	0902		121.8	120.6																	
L 82+05	9 RT	0902		122.9																			
		0902	0903		120.6	120.6																	
L 82+09	9 RT	0903		122.9																			
		0903	0918		120.6	120.3																	
L 83+54	9 RT	0904		123.1																			
		0904	0918		120.9	120.0																	
L 86+35	5 LT	0905		123.7																			
		0905	0913		120.3	119.8																	
L 89+15	38 RT	0906		122.3																			
		0906	1027		119.3	119.1																	
L 81+50	38 LT	0907		122.6																			
		0907	0908		118.9	118.7																	
L 81+85	38 LT	0908		122.9																			
		0908	0915		118.7	118.5																	
L 83+15	37 LT	0909		123.0																			
		0909	0910		118.3	118.0	0.4																
L 84+00	37 LT	0910		123.2																			
		0910	0920		118.0	117.7	0.4																
L 88+50	71 LT	0911		121.7																			
		0911	0912		116.9	116.7																	
L 89+12	75 LT	0912		121.4																			
		0912	1009		116.7	116.3																	
L 88+00	7 LT	0913		123.6																			
		0913	0926		119.8	119.6																	
L 82+25	38 LT	0915		122.9																			
		0915	0909		118.5	118.3	0.3																
							SHEET TOTALS	24															

FROM	TO	R. C. PIPE CLASS III 12	15	18	24	30	36	42	48	R. C. PIPE CLASS IV 12	15	18	24	30	36	42	48	R. C. PIPE CLASS V 12	15	18	24	30	36	42	48
0819	0806										268														
0820																									
0821																									
0821	0835										24														
0822																									
0822	0818										104														
0823																									
0823	0817										64														
0824																									
0824	0809											72													
0825																									
0825	0826										116														
0826																									
0826	0830										28														
0827																									
0827	0816										20														
0828																									
0828	0809										20														
0829																									
0841																									
0841	0815										76														
0901																									
0901	0902										108														
0902																									
0902	0903										8														
0903																									
0903	0918										24														
0904																									
0904	0918										128														
0905																									
0905	0913										168														
0906																									
0906	1027										76														
0907																									
0907	0908												36												
0908																									
0908	0915												40												
0909																									
0909	0910												88												
0910																									
0910	0920												100												
0911																									
0911	0912													64											
0912																									
0912	1009													192											
0913																									
0913	0926										48														
0915																									
0915	0909												92												
SHEET TOTALS											1280	72	356	256											

FROM	TO	ENDWALLS STD. 838.01 OR STD. 838.11 (UNLESS NOTED OTHERWISE) CY	REINFORCED ENDWALLS CY	DRAINAGE STRUCTURE MASONRY CY	QUANTITIES FOR DRAINAGE STRUCTURES (NOTE: TOTAL LIN. FT. FOR PAY QUANTITY SHALL BE A + (1.3 X B)) 0' THRU 5' EACH	A 5' THRU 10' LIN. FT.	B 10' AND ABOVE LIN. FT.	C.B. STD. 840.01 OR STD. 840.02	FRAME, GRATES, AND HOOD STD. 840.03 GRATE TYPE E	F	G		CONCRETE TRANSITIONAL SECTION D.I. STD. 852.04 OR STD. 852.06	C.B. STD. 852.05
0819	0806													
0820					1	0.4								
0821					1			1			1			
0821	0835													
0822														
0822	0818													
0823														
0823	0817													
0824					1			1		1				
0824	0809													
0825					1			1			1			
0825	0826													
0826					1			1			1			
0826	0830													
0827														
0827	0816													
0828														
0828	0809													
0829														
0841					1			1		1				
0841	0815													
0901					1			1			1			1
0901	0902													
0902					1			1	1					1
0902	0903													
0903					1			1	1					1
0903	0918													
0904					1			1			1			1
0904	0918													
0905					1								1	
0905	0913													
0906					1			1		1				
0906	1027													
0907					1			1			1			
0907	0908													
0908					1			1			1			
0908	0915													
0909					1			1		1				
0909	0910													
0910					1	0.2		1		1				
0910	0920													
0911					1			1			1			
0911	0912													
0912					1			1			1			
0912	1009													
0913					1								1	
0913	0926													
0915					1			1		1				
0915	0909													
SHEET TOTALS					20	0.6		17	2	6	9		2	4

FROM	TO	D.I. STD. 840.14 OR STD. 840.15	D.I. FRAME AND GRATES STD. 840.16	G.D.I. TYPE "A" STD. 840.17 OR STD. 840.26	G.D.I. TYPE "B" STD. 840.18 OR STD. 840.27	G.D.I. TYPE "D" STD. 840.19 OR STD. 840.28	G.D.I. (N.S. SAG) FRAME W/ 2 GRATES STD. 840.24	G.D.I. (N.S. FLAT) FRAME W/ GRATE STD. 840.29	G.D.I. (N.S. FLAT) FRAME W/ 2 GRATES STD. 840.29	DRIVEWAY D.I. STD. 840.30	FRAME W/ GRATE FOR DRIVEWAY STD. 840.30	J.B. STD. 840.31 OR STD. 840.32	ANGLED VANE GRATES AND FRAMES STD. 840.33	T.B.J.B. STD. 840.34	T.B.D.I. STD. 840.35	T.B.D.I. FOR STEEL GRATES STD. 840.36	STEEL FRAME WITH TWO GRATES STD. 840.37	TEMP STEEL PLATE COVER MASONRY DRAINAGE		M.H. STD. 840.51, STD. 840.52, OR STD. 840.53	M.H. FRAME AND COVER STD. 840.54	ADJUST M.H.	PIPE CLEANOUT EA	FLOWABLE FILL CY	CONCRETE COLLARS CL. "B" STD. 840.72 CY	CONCRETE AND BRICK PIPE PLUG STD. 840.71 CY	PIPE REMOVAL LIN. FT.	REMARKS
0819	0806																											
0820												1									1							
0821																												Min Depth; See Detail 2C-1
0821	0835																											
0822																												
0822	0818																											
0823																												
0823	0817																											
0824																												Min Depth; See Detail 2C-1
0824	0809																											
0825																												Min Depth; See Detail 2C-1
0825	0826																											
0826																												Min Depth; See Detail 2C-1
0826	0830																											
0827																												
0827	0816																											
0828																												
0828	0809																											
0829																												
0841																												Min Depth; See Detail 2C-1
0841	0815																											
0901																												Min Depth; See Detail 2C-1
0901	0902																											
0902																												
0902	0903																											
0903																												
0903	0918																											
0904																												Min Depth; See Detail 2C-1
0904	0918																											
0905		1	1																									
0905	0913																											
0906																												
0906	1027																											
0907																												Min Depth; See Detail 2C-1
0907	0908																											
0908																												
0908	0915																											
0909																												
0909	0910																											
0910																												
0910	0920																											
0911																												
0911	0912																											
0912																												
0912	1009																											
0913		1	1																									
0913	0926																											
0915																												
0915	0909																											
SHEET TOTALS		2	2									1									1							

ABBREVIATIONS

C.A.A.	CORRUGATED ALUMINIUM ALLOY
C.B.	CATCH BASIN
C.S.	CORRUGATED STEEL
D.I.	DROP INLET
G.D.I.	GRATED DROP INLET
H.D.P.E.	HIGH DENSITY POLYETHYLENE
J.B.	JUNCTION BOX
M.H.	MANHOLE
N.S.	NARROW SLOT
P.V.C.	POLYVINYL CHLORIDE
R.C.	REINFORCED CONCRETE
T.B.D.I.	TRAFFIC BEARING DROP INLET
T.B.J.B.	TRAFFIC BEARING JUNCTION BOX
W.S.	WIDE SLOT

Docusign Envelope ID: 5BEC07C3-22DF-4939-99FC-60F4D2BB7B09

8/17/99

COMPUTED BY:	Karen Hefner, PE	DATE:	Rev 11/24/25
CHECKED BY:	H Turner, PE	DATE:	Rev 11/24/25

NORTH CAROLINA DEPARTMENT OF TRANSPORTATION
DIVISION OF HIGHWAYS

PROJECT NO.	SHEET NO.
U-3609B	3D-7

Note: Invert Elevations indicated are for Bid Purposes only and shall not be used for project construction stakeout. See "Standard Specifications For Roads and Structures, Section 300-5".

LIST OF PIPES, ENDWALLS, ETC. (FOR PIPES 48 INCHES & UNDER)

LINE & STATION / SIZE / THICKNESS OR GAUGE	OFFSET	STRUCTURE NUMBER FROM	STRUCTURE NUMBER TO	TOP ELEVATION FT.	INVERT ELEVATION FT.	INVERT ELEVATION FT.	MINIMUM REQUIRED SLOPE %	Side Drain Pipe (RCP, CSP, HDPE, PVC, or PP PIPE) 15	18	24	DO NOT USE RCP	DO NOT USE CSP	DO NOT USE HDPE	DO NOT USE PVC	DO NOT USE PP PIPE
L 83+15	53 LT	0916		121.9											
		0916	0909		120.5	120.3									
L 82+30	9 RT	0918		124.6											
		0918	0917		119.5	118.9									
L 85+00	38 LT	0920		123.4											
		0920	0923		117.7	117.4	0.6								
L 86+13	64 LT	0921		122.6											
		0921	0923		120.9	120.0									
L 85+00	56 LT	0922		121.6											
		0922	0920		120.0	119.7									
L 86+19	38 LT	0923		123.3											
		0923	0924		117.4	117.1									
L 87+13	38 LT	0924		123.2											
		0924	0911		117.2	116.9									
L 86+00	4 LT	0925		123.5											
		0925	0905		120.5	120.3									
L 88+00	38 RT	0926		122.7											
		0926	0906		119.6	119.3									
L 78+50	56 LT	0930		123.1											
		0930	0813		121.7	119.7									
L 80+00	61 LT	0931		120.7											
		0931	0934		119.3	119.2									
L 81+50	50 LT	0932		123.1											
		0932	0907		121.3	119.6									
L 82+30	66 LT	0933		122.9											
		0933	0915		121.3	118.8									
L 80+00	37 LT	0934		123.0											
		0934	0907		119.2	118.9	0.8								
Y13 12+15	15 RT	0935													
Y13 12+85	20 RT	0936													
		0935	0936												
L 81+35	70 RT	0940						36							
L 84+38	64 RT	0941						38							
L 86+24	64 RT	0942						104							
L 92+00	37 RT	1002		121.4											
		1002	1003		119.2	118.5									
L 94+30	37 RT	1003		120.8											
		1003	1004		118.5	118.1									
L 94+95	38 RT	1004		120.9											
		1004	1030		118.1	118.0									
L 95+15	37 RT	1005		121.2											
		1005	1004		118.2	118.1									
L 95+55	38 RT	1006		121.5											
		1006	1005		118.3	118.2									
L 96+00	10 RT	1008		121.8											
		1008	1029		119.5	119.5									
L 91+00	37 LT	1009		122.0											
		1009	1018		116.3	115.9									
L 96+72	10 RT	1012		122.1											
		1012	1011		119.3	118.8									
SHEET TOTALS								178							

LINE & STATION	FROM	TO	C. S. PIPE 12 (.064)	C. S. 15 (.064)	C. S. 18 (.064)	C. S. 24 (.064)	C. S. 30 (.079)	C. S. 36 (.079)	C. S. 42 (.109)	C. S. 48 (.109)	R. C. PIPE CLASS III 12	III 15	III 18	III 24	III 30	III 36	III 42	III 48	R. C. PIPE CLASS IV 12	IV 15	IV 18	IV 24	IV 30	IV 36	IV 42	IV 48	R. C. PIPE CLASS V 12	V 15	V 18	V 24	V 30	V 36	V 42	V 48
L 83+15	0916																																	
	0916	0909																		16														
L 82+30	0918																																	
	0918	0917																		56														
L 85+00	0920																																	
	0920	0923																				120												
L 86+13	0921																																	
	0921	0923																		28														
L 85+00	0922																																	
	0922	0920																		20														
L 86+19	0923																																	
	0923	0924																					96											
L 87+13	0924																																	
	0924	0911																					144											
L 86+00	0925																																	
	0925	0905																		36														
L 88+00	0926																																	
	0926	0906																		116														
L 78+50	0930																																	
	0930	0813																		20														
L 80+00	0931																																	
	0931	0934																		28														
L 81+50	0932																																	
	0932	0907																		16														
L 82+30	0933																																	
	0933	0915																		32														
L 80+00	0934																																	
	0934	0907																			152													
Y13 12+15	0935																																	
Y13 12+85	0936																																	
	0935	0936											18																					
L 81+35	0940																																	
L 84+38	0941																																	
L 86+24	0942																																	
L 92+00	1002																																	
	1002	1003																		232														
L 94+30	1003																																	
	1003	1004																		68														
L 94+95	1004																																	
	1004	1030																		24														
L 95+15	1005																																	
	1005	1004																		24														
L 95+55	1006																																	
	1006	1005																		40														
L 96+00	1008																																	
	1008	1029																		28														
L 91+00	1009																																	
	1009	1018																					180											
L 96+72	1012																																	
	1012	1011																		56														
SHEET TOTALS													18							840	152	120	420											

LINE & STATION	FROM	TO	ENDWALLS STD. 838.01 OR STD. 838.11 (UNLESS NOTED OTHERWISE) CY	REINFORCED ENDWALLS CY	DRAINAGE STRUCTURE MASONRY CY	QUANTITIES FOR DRAINAGE STRUCTURES (NOTE: TOTAL LIN. FT. FOR PAY QUANTITY SHALL BE A + (1.3 X B)) 0' THRU 5' EACH	A: 5' THRU 10' LIN. FT.	B: 10' AND ABOVE LIN. FT.	C.B. STD. 840.01 OR STD. 840.02	FRAME, GRATES, AND HOOD STD. 840.03 GRATE TYPE E	F	G		CONCRETE TRANSITIONAL SECTION D.I. STD. 852.04 OR STD. 852.06	C.B. STD. 852.05	D.I. STD. 840.14 OR STD. 840.15	D.I. FRAME AND GRATES STD. 840.16	G.D.I. TYPE "A" STD. 840.17 OR STD. 840.26	G.D.I. TYPE "B" STD. 840.18 OR STD. 840.27	G.D.I. TYPE "D" STD. 840.19 OR STD. 840.28	G.D.I. (N.S. SAG) FRAME W/ 2 GRATES STD. 840.24	G.D.I. (N.S. FLAT) FRAME W/ GRATE STD. 840.29	G.D.I. (N.S. FLAT) FRAME W/ 2 GRATES STD. 840.29	DRIVEWAY D.I. STD. 840.30	FRAME W/ GRATE FOR DRIVEWAY STD. 840.30	J.B. STD. 840.31 OR STD. 840.32	ANGLED VANE GRATES AND FRAMES STD. 840.33	T.B.J.B. STD. 840.34	T.B.D.I. STD. 840.35	T.B.D.I. FOR STEEL GRATES STD. 840.36	STEEL FRAME WITH TWO GRATES STD. 840.37	TEMP STEEL PLATE COVER MASONRY DRAINAGE		M.H. STD. 840.51, STD. 840.52, OR STD. 840.53	M.H. FRAME AND COVER STD. 840.54	ADJUST M.H.	PIPE CLEANOUT EA	FLOWABLE FILL CY	CONCRETE COLLARS CL. "B" STD. 840.72 CY	CONCRETE AND BRICK PIPE PLUG STD. 840.71 CY	PIPE REMOVAL LIN. FT.	REMARKS
L 83+15	0916																																									
	0916	0909																																								
L 82+30	0918					1	0.1																						1							1							
	0918	0917																																								
L 85+00	0920					1	0.6		1		1																															
	0920	0923																																								
L 86+13	0921					1										1	1																									Min Depth; See Detail 2C-2
	0921	0923																																								
L 85+00	0922					1										1	1																									Min Depth; See Detail 2C-2
	0922	0920																																								
L 86+19	0923					1	1.0		1			1																														
	0923	0924																																								
L 87+13	0924					1	1.1		1			1																														
	0924	0911																																								
L 86+00	0925					1								1		1	1																									
	0925	0905																																								
L 88+00	0926					1			1		1																															
	0926	0906																																								
L 78+50	0930																																									
	0930	0813																																								
L 80+00	0931																																									
	0931	0934																																								
L 81+50	0932																																									
	0932	0907																																								
L 82+30	0933																																									
	0933	0915																																								
L 80+00	0934					1			1			1																														
	0934	0907																																								
Y13 12+15	0935																																					0.4465			
Y13 12+85	0936																																					0.4465			
	0935	0936																																								
L 81+35	0940																																									
L 84+38	0941																																									
L 86+24	0942																																									
L 92+00	1002					1			1		1																															
	1002	1003																																								
L 94+30	1003					1			1		1																															
	1003	1004																																								
L 94+95	1004					1			1		1																															
	1004	1030																																								
L 95+15	1005					1			1		1																															
	1005	1004																																								
L 95+55	1006					1			1	1																																
	1006	1005																																								
L 96+00	1008					1			1		1				1																											
	1008	1029																																								
L 91+00	1009					1	0.7		1			1																														
	1009	1018																																								
L 96+72	1012					1			1		1				1																											
	1012	1011																																								
SHEET TOTALS						17	3.5		13	1	8	4		1	2	3	3												1							1				0.8930			

ABBREVIATIONS

C.A.A.	CORRUGATED ALUMINIUM ALLOY
C.B.	CATCH BASIN
C.S.	CORRUGATED STEEL
D.I.	DROP INLET
G.D.I.	GRATED DROP INLET
H.D.P.E.	HIGH DENSITY POLYETHYLENE
J.B.	JUNCTION BOX
M.H.	MANHOLE
N.S.	NARROW SLOT
P.V.C.	POLYVINYL CHLORIDE
R.C.	REINFORCED CONCRETE
T.B.D.I.	TRAFFIC BEARING DROP INLET
T.B.J.B.	TRAFFIC BEARING JUNCTION BOX
W.S.	WIDE SLOT

Docusign Envelope ID: 5BEC07C3-22DF-4939-99FC-60F4D2BB7B09

8/17/99

COMPUTED BY: Karen Hefner, PE DATE: Rev 12/02/25

CHECKED BY: H Turner, PE DATE: Rev 12/02/25

PROJECT NO.	SHEET NO.
U-3609B	3D-8

NORTH CAROLINA DEPARTMENT OF TRANSPORTATION
DIVISION OF HIGHWAYS

Note: Invert Elevations indicated are for Bid Purposes only and shall not be used for project construction stakeout.
See "Standard Specifications For Roads and Structures, Section 300-5".

LIST OF PIPES, ENDWALLS, ETC. (FOR PIPES 48 INCHES & UNDER)

LINE & STATION	OFFSET	STRUCTURE NUMBER FROM	STRUCTURE NUMBER TO	TOP ELEVATION FT.	INVERT ELEVATION FT.	INVERT ELEVATION FT.	MINIMUM REQUIRED SLOPE %	Side Drain Pipe (RCP, CSP, HDPE, PVC, or PP PIPE) 15	18	24	DO NOT USE RCP	DO NOT USE CSP	DO NOT USE HDPE	DO NOT USE PVC	DO NOT USE PP PIPE	C. S. PIPE 12 (.064)	15 (.064)	18 (.064)	24 (.064)	30 (.079)	36 (.079)	42 (.109)	48 (.109)
L 96+72	38 LT	1013		120.7																			
		1013	1016		116.2	115.2																	
L 98+00	38 LT	1014		120.5																			
		1014	1013		117.5	116.2																	
L 98+00	1 RT	1015		122.2																			
		1015	1012		119.9	119.3																	
L 92+80	37 LT	1018		121.4																			
		1018	1019		115.9	115.7																	
L 94+00	38 LT	1019		121.0																			
		1019	1020		115.7	115.6																	
L 102+25	51 LT	1021		120.5																			
		1021	1022		118.3	118.0																	
L 103+23	39 LT	1022		120.8																			
		1022	1023		118.0	117.9																	
L 103+26	38 LT	1023		120.8																			
		1023	1102		117.6	117.1																	
L 103+23	10 RT	1024		122.2																			
		1024	1025		119.2	119.1																	
L 103+27	10 RT	1025		122.2																			
		1025	1023		119.1	117.9																	
L 89+78	79 RT	1027		121.3																			
		1027	1028		119.1	118.8																	
L 90+35	65 RT	1028		121.3																			
		1028	1001		118.8	118.3																	
L 96+25	10 RT	1029		121.9																			
		1029	1012		119.5	119.3																	
Y14 11+29	34 RT	1031		120.7																			
		1031	1021		119.0	118.3																	
L 96+72	58 LT	1032		119.2																			
L 98+00	56 LT	1033		119.7																			
L 98+73	64 LT	1034		119.9																			
L 99+61	54 LT	1035		120.0																			
L 98+73	35 LT	1036		120.8																			
L 99+61	35 LT	1037		121.1																			
		1032	1013		117.0	116.2																	
		1033	1014		118.0	117.5																	
		1034	1036		118.2	117.8																	
		1035	1037		118.3	118.1																	
		1037	1036		118.1	117.8																	
		1036	1014		117.8	117.5																	
L 100+32	54 LT	1038						32															
Y13 10+29	19 LT	1075						48															
L 106+10	37 LT	1101		121.6																			
		1101	1105		117.1	116.2																	
L 104+30	38 LT	1102		121.1																			
		1102	1101		117.6	117.1																	
L 106+10	10 RT	1103		122.9																			
SHEET TOTALS								80															

LINE & STATION	FROM	TO	R. C. PIPE CLASS III 12	15	18	24	30	36	42	48	R. C. PIPE CLASS IV 12	15	18	24	30	36	42	48	R. C. PIPE CLASS V 12	15	18	24	30	36	42	48
L 96+72	1013																									
	1013	1016										112														
L 98+00	1014																									
	1014	1013										128														
L 98+00	1015																									
	1015	1012										132														
L 92+80	1018																									
	1018	1019													120											
L 94+00	1019																									
	1019	1020													40											
L 102+25	1021																									
	1021	1022										96														
L 103+23	1022																									
	1022	1023										4														
L 103+26	1023																									
	1023	1102										104														
L 103+23	1024																									
	1024	1025										8														
L 103+27	1025																									
	1025	1023										52														
L 89+78	1027																									
	1027	1028										60														
L 90+35	1028																									
	1028	1001										24														
L 96+25	1029																									
	1029	1012										48														
Y14 11+29	1031																									
	1031	1021										16														
L 96+72	1032																									
L 98+00	1033																									
L 98+73	1034																									
L 99+61	1035																									
L 98+73	1036																									
L 99+61	1037																									
	1032	1013										20														
	1033	1014										20														
	1034	1036										30														
	1035	1037										20														
	1037	1036										84														
	1036	1014										72														
L 100+32	1038																									
Y13 10+29	1075																									
L 106+10	1101																									
	1101	1105												284												
L 104+30	1102																									
	1102	1101											176													
L 106+10	1103																									
SHEET TOTALS												1030	176	284	160											

LINE & STATION	FROM	TO	ENDWALLS STD. 838.01 OR STD. 838.11 (UNLESS NOTED OTHERWISE) CY	REINFORCED ENDWALLS CY	DRAINAGE STRUCTURE MASONRY CY	QUANTITIES FOR DRAINAGE STRUCTURES (NOTE: TOTAL LIN. FT. FOR PAY QUANTITY SHALL BE A + (1.3 X B)) 0' THRU 5' EACH	A 5' THRU 10' LIN. FT.	B 10' AND ABOVE LIN. FT.	C.B. STD. 840.01 OR STD. 840.02	FRAME, GRATES, AND HOOD STD. 840.03 GRATE TYPE E	F	G		CONCRETE TRANSITIONAL SECTION D.I. STD. 852.04 OR STD. 852.06	C.B. STD. 852.05
L 96+72	1013					1			1		1				
	1013	1016													
L 98+00	1014					1			1		1				
	1014	1013													
L 98+00	1015					1			1		1				1
	1015	1012													
L 92+80	1018					1	0.5		1			1			
	1018	1019													
L 94+00	1019					1	0.4		1			1			
	1019	1020													
L 102+25	1021					1			1			1			
	1021	1022													
L 103+23	1022					1			1	1					
	1022	1023													
L 103+26	1023					1			1	1					
	1023	1102													
L 103+23	1024					1			1	1					
	1024	1025													
L 103+27	1025					1			1	1					
	1025	1023													
L 89+78	1027					1			1		1				
	1027	1028													
L 90+35	1028					1			1		1				
	1028	1001													
L 96+25	1029					1			1		1				1
	1029	1012													
Y14 11+29	1031														
	1031	1021													
L 96+72	1032														
L 98+00	1033														
L 98+73	1034														
L 99+61	1035														
L 98+73	1036					1			1		1				
L 99+61	1037					1			1		1				
	1032	1013													
	1033	1014													
	1034	1036													
	1035	1037													
	1037	1036													
	1036	1014													
L 100+32	1038														
Y13 10+29	1075														
L 106+10	1101					1			1		1				
	1101	1105													
L 104+30	1102					1			1		1				
	1102	1101													
L 106+10	1103					1			1			1			1
SHEET TOTALS						18	0.9		18	4	10	4			3

LINE & STATION	FROM	TO	D.I. STD. 840.14 OR STD. 840.15	D.I. FRAME AND GRATES STD. 840.16	G.D.I. TYPE "A" STD. 840.17 OR STD. 840.26	G.D.I. TYPE "B" STD. 840.18 OR STD. 840.27	G.D.I. TYPE "D" STD. 840.19 OR STD. 840.28	G.D.I. (N.S. SAG) FRAME W/ 2 GRATES STD. 840.24	G.D.I. (N.S. FLAT) FRAME W/ GRATE STD. 840.29	G.D.I. (N.S. FLAT) FRAME W/ 2 GRATES STD. 840.29	DRIVEWAY D.I. STD. 840.30	FRAME W/ GRATE FOR DRIVEWAY STD. 840.30	J.B. STD. 840.31 OR STD. 840.32	ANGLED VANE GRATES AND FRAMES STD. 840.33	T.B.J.B. STD. 840.34	T.B.D.I. STD. 840.35	T.B.D.I. FOR STEEL GRATES STD. 840.36	STEEL FRAME WITH TWO GRATES STD. 840.37	TEMP STEEL PLATE COVER MASONRY DRAINAGE		M.H. STD. 840.51, STD. 840.52, OR STD. 840.53	M.H. FRAME AND COVER STD. 840.54	ADJUST M.H.	PIPE CLEANOUT EA	FLOWABLE FILL CY	CONCRETE COLLARS CL. "B" STD. 840.72 CY	CONCRETE AND BRICK PIPE PLUG STD. 840.71 CY	PIPE REMOVAL LIN. FT.	REMARKS
L 96+72	1013																												
	1013	1016																											
L 98+00	1014																												
	1014	1013																											
L 98+00	1015																												
	1015	1012																											
L 92+80	1018																												
	1018	1019																											
L 94+00	1019																												
	1019	1020																											
L 102+25	1021																												Min Depth; See Detail 2C-1
	1021	1022																											
L 103+23	1022																												Min Depth; See Detail 2C-1
	1022	1023																											
L 103+26	1023																												Min Depth; See Detail 2C-1
	1023	1102																											
L 103+23	1024																												
	1024	1025																											
L 103+27	1025																												
	1025	1023																											
L 89+78	1027																												
	1027	1028																											
L 90+35	1028																												
	1028	1001																											
L 96+25	1029																												
	1029	1012																											
Y14 11+29	1031		1	1																									SEE SPECIAL DETAIL; MIN DEPTH
	1031	1021																											
L 96+72	1032		1	1																									
L 98+00	1033		1	1																									SEE SPECIAL DETAIL; MIN DEPTH
L 98+73	1034		1	1																									SEE SPECIAL DETAIL; MIN DEPTH
L 99+61	1035		1	1																									SEE SPECIAL DETAIL; MIN DEPTH
L 98+73	1036																												
L 99+61	1037																												
	1032	1013																											
	1033	1014																											
	1034	1036																											
	1035	1037																											
	1037	1036																											
	1036	1014																											
L 100+32	1038																												
Y13 10+29	1075																												
L 106+10	1101																												Min Depth; See Detail 2C-1
	1101	1105																											
L 104+30	1102																												
	1102	1101																											
L 106+10	1103																												
SHEET TOTALS			5	5																									

ABBREVIATIONS

C.A.A.	CORRUGATED ALUMINIUM ALLOY
C.B.	CATCH BASIN
C.S.	CORRUGATED STEEL
D.I.	DROP INLET
G.D.I.	GRATED DROP INLET
H.D.P.E.	HIGH DENSITY POLYETHYLENE
J.B.	JUNCTION BOX
M.H.	MANHOLE
N.S.	NARROW SLOT
P.V.C.	POLYVINYL CHLORIDE
R.C.	REINFORCED CONCRETE
T.B.D.I.	TRAFFIC BEARING DROP INLET
T.B.J.B.	TRAFFIC BEARING JUNCTION BOX
W.S.	WIDE SLOT

Docusign Envelope ID: 5BEC07C3-22DF-4939-99FC-60F4D2BB7B09

8/17/99

COMPUTED BY:	Karen Hefner, PE	DATE:	Rev 11/24/25
CHECKED BY:	H Turner, PE	DATE:	Rev 11/24/25

NORTH CAROLINA DEPARTMENT OF TRANSPORTATION
DIVISION OF HIGHWAYS

PROJECT NO.	SHEET NO.
U-3609B	3D-9

Note: Invert Elevations indicated are for Bid Purposes only and shall not be used for project construction stakeout. See "Standard Specifications For Roads and Structures, Section 300-5".

LIST OF PIPES, ENDWALLS, ETC. (FOR PIPES 48 INCHES & UNDER)

LINE & STATION / SIZE / THICKNESS OR GAUGE	OFFSET	STRUCTURE NUMBER FROM	STRUCTURE NUMBER TO	TOP ELEVATION FT.	INVERT ELEVATION FT.	INVERT ELEVATION FT.	% MINIMUM REQUIRED SLOPE	Side Drain Pipe (RCP, CSP, HDPE, PVC, or PP PIPE) 15	18	24	DO NOT USE RCP	DO NOT USE CSP	DO NOT USE HDPE	DO NOT USE PVC	DO NOT USE PP PIPE	C. S. PIPE 12	15	18	24	30	36	42	48
																.064	.064	.064	.064	.079	.079	.109	.109
		1103	1101		119.9	117.1																	
L 104+30	10 RT	1104		122.4																			
		1104	1102		119.4	117.6																	
L 109+00	38 LT	1105		121.6																			
		1105	1106		116.2	115.4																	
L 111+29	37 LT	1106		121.1																			
		1106	1132		115.4	115.3																	
L 112+40	37 LT	1107		121.6																			
		1107	1106		119.3	118.0																	
L 112+75	6 RT	1108		122.5																			
		1108	1130		119.7	119.5																	
L 113+73	2 LT	1109		122.2																			
		1109	1108		120.0	119.7																	
L 114+79	9 LT	1110		122.2																			
		1110	1111		119.7	119.7																	
L 114+84	10 LT	1111		122.2																			
		1111	1118		119.7	118.9																	
L 109+50	8 RT	1112		123.4																			
		1112	1113		121.0	120.7																	
L 109+50	46 RT	1113		123.0																			
		1113	1114		120.7	119.7																	
L 110+50	37 RT	1114		122.4																			
		1114	1132		119.7	118.0																	
L 112+50	38 RT	1115		121.3																			
		1115	1132		118.6	118.0																	
L 113+72	38 RT	1116		121.2																			
		1116	1115		118.9	118.6																	
L 114+79	37 RT	1117		121.1																			
		1117	1118		119.0	118.9																	
L 114+84	37 RT	1118		121.1																			
		1118	1215		118.9	118.6																	
L 112+75	37 LT	1130		121.8																			
		1130	1107		119.5	119.3																	
L 111+25	42 RT	1132		122.5																			
		1132	1134		115.3	115.3																	
L 111+30	53 LT	1133		122.5																			
		1133	1106		115.4	115.4																	
L 122+20	35 RT	1201		123.3																			
		1201	1202		120.4	119.3																	
L 120+10	38 RT	1202		122.3																			
		1202	1203		119.3	118.7																	
L 118+60	38 RT	1203		121.7																			
		1203	1217		118.7	118.4																	
L 117+05	38 RT	1204		121.3																			
		1204	1213		113.3	113.0	0.4																
L 122+30	8 LT	1205		124.6																			
		1205	1206		121.6	120.2																	
L 119+50	8 LT	1206		123.2																			
		1206	1207		120.2	119.8																	
					SHEET TOTALS																		

LINE & STATION / SIZE / THICKNESS OR GAUGE	R. C. PIPE CLASS III 12	15	18	24	30	36	42	48	R. C. PIPE CLASS IV 12	15	18	24	30	36	42	48	R. C. PIPE CLASS V 12	15	18	24	30	36	42	48
										48													
L 104+30																								
										48													
L 109+00																								
												232												
L 111+29																								
L 112+40																								
										112													
L 112+75																								
										44													
L 113+73																								
										100													
L 114+79																								
										8													
L 114+84																								
										48													
L 109+50																								
										40													
L 109+50																								
										104													
L 110+50																								
										76													
L 112+50																								
										128													
L 113+72																								
										124													
L 114+79																								
										8													
L 114+84																								
										124													
L 112+75																								
										36													
L 111+25																								
													12											
L 111+30																								
							16																	
L 122+20																								
										212													
L 120+10																								
										152													
L 118+60																								
										140													
L 117+05																								
													24											
L 122+30																								
										284													
L 119+50																								
										84													
SHEET TOTALS							16			1920		232			36								

LINE & STATION / SIZE / THICKNESS OR GAUGE	ENDWALLS STD. 838.01 OR STD. 838.11 (UNLESS NOTED OTHERWISE) CY	REINFORCED ENDWALLS CY	DRAINAGE STRUCTURE MASONRY CY	QUANTITIES FOR DRAINAGE STRUCTURES (NOTE: TOTAL LIN. FT. FOR PAY QUANTITY SHALL BE A + (1.3 X B)) 0' THRU 5' EACH	A 5' THRU 10' LIN. FT.	B 10' AND ABOVE LIN. FT.	C.B. STD. 840.01 OR STD. 840.02	FRAME, GRATES, AND HOOD STD. 840.03 GRATE TYPE E	F	G	CONCRETE TRANSITIONAL SECTION D.I. STD. 852.04 OR STD. 852.06	C.B. STD. 852.05	D.I. STD. 840.14 OR STD. 840.15	D.I. FRAME AND GRATES STD. 840.16	G.D.I. TYPE "A" STD. 840.17 OR STD. 840.26	G.D.I. TYPE "B" STD. 840.18 OR STD. 840.27	G.D.I. TYPE "D" STD. 840.19 OR STD. 840.28	G.D.I. (N.S. SAG) FRAME W/ 2 GRATES STD. 840.24	G.D.I. (N.S. FLAT) FRAME W/ GRATE STD. 840.29	G.D.I. (N.S. FLAT) FRAME W/ 2 GRATES STD. 840.29	DRIVEWAY D.I. STD. 840.30	FRAME W/ GRATE FOR DRIVEWAY STD. 840.30	J.B. STD. 840.31 OR STD. 840.32	ANGLED VANE GRATES AND FRAMES STD. 840.33	T.B.J.B. STD. 840.34	T.B.D.I. STD. 840.35	T.B.D.I. FOR STEEL GRATES STD. 840.36	STEEL FRAME WITH TWO GRATES STD. 840.37	TEMP STEEL PLATE COVER MASONRY DRAINAGE	M.H. STD. 840.51, STD. 840.52, OR STD. 840.53	M.H. FRAME AND COVER STD. 840.54	ADJUST M.H.	PIPE CLEANOUT EA	FLOWABLE FILL CY	CONCRETE COLLARS CL. "B" STD. 840.72 CY	CONCRETE AND BRICK PIPE PLUG STD. 840.71 CY	PIPE REMOVAL LIN. FT.	REMARKS
L 104+30				1			1			1			1																											
L 109+00				1	0.5		1		1																															
L 111+29				1	0.7		1		1																															
L 112+40				1			1			1																														
L 112+75				1								1		1																										
L 113+73				1			1			1																														
L 114+79				1			1	1				1																												
L 114+84				1			1	1				1																												
L 109+50				1									1		1																									
L 110+50				1			1			1																														
L 112+50				1			1			1																														
L 113+72				1			1			1																														
L 114+79				1			1	1																																
L 114+84				1			1	1																																
L 112+75				1			1				1																													
L 111+25				1	2.2																		1									1								
L 111+30	4.500																																							EW for Single 42" - Rdwy Std 838.01
L 122+20				1			1				1																													
L 120+10				1			1				1																													
L 118+60				1			1				1																													
L 117+05				1	3.1		1				1																													
L 122+30				1								1		1	1																									
L 119+50				1								1		1	1																									
SHEET TOTALS	4.500			23	6.5		18	4	7	7		4	4	4	4								1									1								

ABBREVIATIONS

C.A.A.	CORRUGATED ALUMINIUM ALLOY
C.B.	CATCH BASIN
C.S.	CORRUGATED STEEL
D.I.	DROP INLET
G.D.I.	GRATED DROP INLET
H.D.P.E.	HIGH DENSITY POLYETHYLENE
J.B.	JUNCTION BOX
M.H.	MANHOLE
N.S.	NARROW SLOT
P.V.C.	POLYVINYL CHLORIDE
R.C.	REINFORCED CONCRETE
T.B.D.I.	TRAFFIC BEARING DROP INLET
T.B.J.B.	TRAFFIC BEARING JUNCTION BOX
W.S.	WIDE SLOT

Docusign Envelope ID: 5BEC07C3-22DF-4939-99FC-60F4D2BB7B09

8/17/99

COMPUTED BY:	Karen Hefner, PE	DATE:	Rev 11/24/25
CHECKED BY:	H Turner, PE	DATE:	Rev 11/24/25

PROJECT NO.	SHEET NO.
U-3609B	3D-10

NORTH CAROLINA DEPARTMENT OF TRANSPORTATION
DIVISION OF HIGHWAYS

Note: Invert Elevations indicated are for Bid Purposes only and shall not be used for project construction stakeout. See "Standard Specifications For Roads and Structures, Section 300-5".

LIST OF PIPES, ENDWALLS, ETC. (FOR PIPES 48 INCHES & UNDER)

ABBREVIATIONS

- C.A.A. CORRUGATED ALUMINIUM ALLOY
- C.B. CATCH BASIN
- C.S. CORRUGATED STEEL
- D.I. DROP INLET
- G.D.I. GRATED DROP INLET
- H.D.P.E. HIGH DENSITY POLYETHYLENE
- J.B. JUNCTION BOX
- M.H. MANHOLE
- N.S. NARROW SLOT
- P.V.C. POLYVINYL CHLORIDE
- R.C. REINFORCED CONCRETE
- T.B.D.I. TRAFFIC BEARING DROP INLET
- T.B.J.B. TRAFFIC BEARING JUNCTION BOX
- W.S. WIDE SLOT

LINE & STATION	OFFSET		STRUCTURE NUMBER FROM	TO	TOP ELEVATION FT.	INVERT ELEVATION FT.	INVERT ELEVATION FT.	MINIMUM REQUIRED SLOPE %	Side Drain Pipe (RCP, CSP, HDPE, PVC, or PP PIPE) 15	18	24	DO NOT USE RCP	DO NOT USE CSP	DO NOT USE HDPE	DO NOT USE PVC	DO NOT USE PP PIPE	C. S. PIPE 12 .064	15 .064	18 .064	24 .064	30 .079	36 .079	42 .109	48 .109
L 118+68	9	LT	1207		123.2																			
			1207	1208		119.8	118.8	0.4																
L 117+20	10	LT	1208		122.6																			
			1208	1217		118.8	118.4	0.5																
L 116+47	70	LT	1209		119.4																			
			1209	1210		116.0	114.3	0.3																
L 116+72	24	LT	1210		120.0																			
L 116+96	20	RT	1211		119.1																			
			1211	1204		113.4	113.3	0.4																
L 115+75	10	LT	1214		122.4																			
			1214	1111		119.9	119.7																	
L 116+05	37	RT	1215		121.2																			
			1215	1204		118.6	118.3																	
L 118+68	57	LT	1216		122.2																			
			1216	1207		120.8	120.0																	
L 117+20	38	RT	1217		122.4																			
			1217	1204		118.4	118.0																	
			1210	1211																				
Y20 14+68	35	LT	1303		126.5																			
			1303	1304		123.5	122.9																	
			1304																					
Y20 14+71	35	LT	1305		126.5																			
			1305	1306		123.5	122.9																	
			1306																					
Y20 14+91	71	RT	1307		125.9																			
			1307	1308		122.9	122.7																	
Y20 14+94	71	RT	1309		125.9																			
			1309	1310		122.9	122.7																	
Y20 11+92	43	LT	1311						20															
Y19 12+73	32	LT	1312						36															
Y20 20+03	41	LT	1401						20															
Y20 23+34	35	LT	1402						20															
Y20 23+39	34	RT	1403						36															
Y20 20+25	40	RT	1404						28															
Y13 28+83	23	RT	1601						40															
Y11 22+08	88	LT	1602						48															
Y11 28+06	22	LT	1603						40															
Y11 27+84	22	RT	1604						36															
Y11 25+55	26	RT	1604A						36															
Y12 14+85	0	CL	1605			118.3	118.0																	
Y11 15+66	0	CL	1606	1607		119.7	119.6																	
Y11 26+59	33	LT	1608						24															
Y11 28+24																								
L 47+19	0	CL	0000																					
L 38+64	0	CL	0000																					
L 69+14	44	LT	0000																					
SHEET TOTALS									384															

LINE & STATION	FROM	TO	R. C. PIPE CLASS III 12	15	18	24	30	36	42	48	R. C. PIPE CLASS IV 12	15	18	24	30	36	42	48	R. C. PIPE CLASS V 12	15	18	24	30	36	42	48
L 118+68	1207																									
	1207	1208										164														
L 117+20	1208																									
	1208	1217										48														
L 116+47	1209																									
	1209	1210															56									
L 116+72	1210																									
L 116+96	1211																									
	1211	1204															20									
L 115+75	1214																									
	1214	1111										92														
L 116+05	1215																									
	1215	1204										100														
L 118+68	1216																									
	1216	1207										52														
L 117+20	1217																									
	1217	1204										16														
	1210	1211																								
Y20 14+68	1303																									
	1303	1304														84										
	1304																									
Y20 14+71	1305																									
	1305	1306														84										
	1306																									
Y20 14+91	1307																									
	1307	1308														48										
Y20 14+94	1309																									
	1309	1310														48										
Y20 11+92	1311																									
Y19 12+73	1312																									
Y20 20+03	1401																									
Y20 23+34	1402																									
Y20 23+39	1403																									
Y20 20+25	1404																									
Y13 28+83	1601																									
Y11 22+08	1602																									
Y11 28+06	1603																									
Y11 27+84	1604																									
Y11 25+55	1604A																									
Y12 14+85	1605																			64						
Y11 15+66	1606	1607				96																				
Y11 26+59	1608																									
Y11 28+24																										
L 47+19	0000																									
L 38+64	0000																									
L 69+14	0000																									
SHEET TOTALS						96						472				264	76			64						

LINE & STATION	FROM	TO	ENDWALLS STD. 838.01 OR STD. 838.11 (UNLESS NOTED OTHERWISE) CY	REINFORCED ENDWALLS CY	DRAINAGE STRUCTURE MASONRY CY	QUANTITIES FOR DRAINAGE STRUCTURES (NOTE: TOTAL LIN. FT. FOR PAY QUANTITY SHALL BE A + (1.3 X B)) 0' THRU 5' EACH	A 5' THRU 10' LIN. FT.	B 10' AND ABOVE LIN. FT.	C.B. STD. 840.01 OR STD. 840.02	FRAME, GRATES, AND HOOD STD. 840.03 GRATE TYPE E	F	G	
L 118+68	1207					1							
	1207	1208											
L 117+20	1208					1			1		1		
	1208	1217											
L 116+47	1209		4.500										
	1209	1210											
L 116+72	1210					1	0.8						
L 116+96	1211					1	0.8						
	1211	1204											
L 115+75	1214					1			1			1	
	1214	1111											
L 116+05	1215					1			1			1	
	1215	1204											
L 118+68	1216												
	1216	1207											
L 117+20	1217					1			1		1		
	1217	1204											
	1210	1211											
Y20 14+68	1303		4.500										
	1303	1304											
	1304		4.500										
Y20 14+71	1305		---										
	1305	1306											
	1306		---										
Y20 14+91	1307		4.500										
	1307	1308											
Y20 14+94	1309		---										
	1309	1310											
Y20 11+92	1311												
Y19 12+73	1312												
Y20 20+03	1401												
Y20 23+34	1402												
Y20 23+39	1403												
Y20 20+25	1404												
Y13 28+83	1601												
Y11 22+08	1602												
Y11 28+06	1603												
Y11 27+84	1604												
Y11 25+55	1604A												
Y12 14+85	1605												
Y11 15+66	1606	1607											
Y11 26+59	1608												
Y11 28+24													
L 47+19	0000												
L 38+64	0000												
L 69+14	0000												
SHEET TOTALS			18.000			7	1.6		4		2	2	

LINE & STATION	FROM	TO	CONCRETE TRANSITIONAL SECTION D.I. STD. 852.04 OR STD. 852.06	C.B. STD. 852.05	D.I. STD. 840.14 OR STD. 840.15	D.I. FRAME AND GRATES STD. 840.16	G.D.I. TYPE "A" STD. 840.17 OR STD. 840.26	G.D.I. TYPE "B" STD. 840.18 OR STD. 840.27	G.D.I. TYPE "D" STD. 840.19 OR STD. 840.28	G.D.I. (N.S. SAG) FRAME W/ 2 GRATES STD. 840.24	G.D.I. (N.S. FLAT) FRAME W/ GRATE STD. 840.29	G.D.I. (N.S. FLAT) FRAME W/ 2 GRATES STD. 840.29	DRIVEWAY D.I. STD. 840.30	FRAME W/ GRATE FOR DRIVEWAY STD. 840.30	J.B. STD. 840.31 OR STD. 840.32	ANGLED VANE GRATES AND FRAMES STD. 840.33	T.B.J.B. STD. 840.34	T.B.D.I. STD. 840.35	T.B.D.I. FOR STEEL GRATES STD. 840.36	STEEL FRAME WITH TWO GRATES STD. 840.37	TEMP STEEL PLATE COVER MASONRY DRAINAGE		M.H. STD. 840.51, STD. 840.52, OR STD. 840.53	M.H. FRAME AND COVER STD. 840.54	ADJUST M.H.	PIPE CLEANOUT EA	FLOWABLE FILL CY	CONCRETE COLLARS CL. "B" STD. 840.72 CY	CONCRETE AND BRICK PIPE PLUG STD. 840.71 CY	PIPE REMOVAL LIN. FT.	REMARKS
L 118+68	1207		1		1	1																									
	1207	1208																													
L 117+20	1208			1																											
	1208	1217																													
L 116+47	1209																														EW for Single 42" - Rdwy Std 838.01
	1209	1210																													
L 116+72	1210																1							1							See Special Detail 2C-3
L 116+96	1211																1							1							See Special Detail 2C-3
	1211	1204																													
L 115+75	1214			1																											
	1214	1111																													
L 116+05	1215																														
	1215	1204																													
L 118+68	1216																														
	1216	1207																													
L 117+20	1217																														
	1217	1204																													
	1210	1211																								1					Pipe Cleanout
Y20 14+68	1303																														EW for Double 36" - Rdwy Std 838.01
	1303	1304																													
	1304																														EW for Double 36" - Rdwy Std 838.01
Y20 14+71	1305																														EW for Double 36" - Rdwy Std 838.01; See 1303
	1305	1306																													
	1306																														EW for Double 36" - Rdwy Std 838.01; See 1304
Y20 14+91	1307																														EW for Double 36" - Rdwy Std 838.01
	1307	1308																													
Y20 14+94	1309																														EW for Double 36" - Rdwy Std 838.01; See 1307
	1309	1310																													
Y20 11+92	1311																														
Y19 12+73	1312																														
Y20 20+03	1401																														
Y20 23+34	1402																														
Y20 23+39	1403																														
Y20 20+25	1404																														
Y13 28+83	1601																														
Y11 22+08	1602																														
Y11 28+06	1603																														
Y11 27+84	1604																														
Y11 25+55	1604A																														
Y12 14+85	1605																														
Y11 15+66	1606	1607																													
Y11 26+59	1608																														
Y11 28+24																										1					Pipe Cleanout
L 47+19	0000																										1				
L 38+64	0000																										3				
L 69+14	0000																													25	
SHEET TOTALS			1	2	1	1											2							2		2	4			25	

Docusign Envelope ID: 5BEC07C3-22DF-4939-99FC-60F4D2BB7B09

8/17/99

COMPUTED BY:	Karen Hefner, PE	DATE:	Rev 11/24/25
CHECKED BY:	H Turner, PE	DATE:	Rev 11/24/25

NORTH CAROLINA DEPARTMENT OF TRANSPORTATION
DIVISION OF HIGHWAYS

PROJECT NO.	SHEET NO.
U-3609B	3D-11

Note: Invert Elevations indicated are for Bid Purposes only and shall not be used for project construction stakeout. See "Standard Specifications For Roads and Structures, Section 300-5".

LIST OF PIPES, ENDWALLS, ETC. (FOR PIPES 48 INCHES & UNDER)

Other columns on the sheet (all blank in every row and in Sheet Totals): TOP ELEVATION (FT.); INVERT ELEVATION (FT.); INVERT ELEVATION (FT.); MINIMUM REQUIRED SLOPE (%); Side Drain Pipe (RCP, CSP, HDPE, PVC, or PP PIPE) 15, 18, 24, DO NOT USE RCP, DO NOT USE CSP, DO NOT USE HDPE, DO NOT USE PVC, DO NOT USE PP PIPE; C. S. PIPE 12 (.064), 15 (.064), 18 (.064), 24 (.064), 30 (.079), 36 (.079), 42 (.109), 48 (.109); R. C. PIPE CLASS III 12, 15, 18, 24, 30, 36, 42, 48; R. C. PIPE CLASS IV 12, 15, 18, 24, 30, 36, 42, 48; R. C. PIPE CLASS V 12, 15, 18, 24, 30, 36, 42, 48; ENDWALLS STD. 838.01 OR STD. 838.11 (UNLESS NOTED OTHERWISE) CY; REINFORCED ENDWALLS CY; DRAINAGE STRUCTURE MASONRY CY; QUANTITIES FOR DRAINAGE STRUCTURES (NOTE: TOTAL LIN. FT. FOR PAY QUANTITY SHALL BE A + (1.3 X B)) 0' THRU 5' EACH, A 5' THRU 10' LIN. FT., B 10' AND ABOVE LIN. FT.; C.B. STD. 840.01 OR STD. 840.02; FRAME, GRATES, AND HOOD STD. 840.03 GRATE TYPE E, F, G; CONCRETE TRANSITIONAL SECTION D.I. STD. 852.04 OR STD. 852.06, C.B. STD. 852.05; D.I. STD. 840.14 OR STD. 840.15; D.I. FRAME AND GRATES STD. 840.16; G.D.I. TYPE "A" STD. 840.17 OR STD. 840.26; G.D.I. TYPE "B" STD. 840.18 OR STD. 840.27; G.D.I. TYPE "D" STD. 840.19 OR STD. 840.28; G.D.I. (N.S. SAG) FRAME W/ 2 GRATES STD. 840.24; G.D.I. (N.S. FLAT) FRAME W/ GRATE STD. 840.29; G.D.I. (N.S. FLAT) FRAME W/ 2 GRATES STD. 840.29; DRIVEWAY D.I. STD. 840.30; FRAME W/ GRATE FOR DRIVEWAY STD. 840.30; J.B. STD. 840.31 OR STD. 840.32; ANGLED VANE GRATES AND FRAMES STD. 840.33; T.B.J.B. STD. 840.34; T.B.D.I. STD. 840.35; T.B.D.I. FOR STEEL GRATES STD. 840.36; STEEL FRAME WITH TWO GRATES STD. 840.37; TEMP STEEL PLATE COVER MASONRY DRAINAGE; M.H. STD. 840.51, STD. 840.52, OR STD. 840.53; M.H. FRAME AND COVER STD. 840.54; ADJUST M.H.

The SIZE and THICKNESS OR GAUGE rows are part of the LINE & STATION heading and are blank.

LINE & STATION	OFFSET		STRUCTURE NUMBER FROM	TO	PIPE CLEANOUT (EA)	FLOWABLE FILL (CY)	CONCRETE COLLARS CL. "B" STD. 840.72 (CY)	CONCRETE AND BRICK PIPE PLUG STD. 840.71 (CY)	PIPE REMOVAL (LIN. FT.)	REMARKS
L 67+91	43	LT	0000						24	
L 78+04	485	RT	0000						37	
L 81+77	772	RT	0000						54	
Y11 23+94	16	LT	0000						20	
Y11 25+54	15	RT	0000						19	
Y11 27+88	21	RT	0000						22	
L 62+05	1	LT	0000			6				
L 83+54	10	RT	0000						10	
L 83+53	15	LT	0000			3				
Y1 15+75	21	RT	0000						32	
Y1 15+28	23	LT	0000						19	
Y1 16+15	22	LT	0000						16	
Y1 16+88	23	LT	0000						28	
Y1 17+85	25	RT	0000						49	
Y1 17+76	24	LT	0000						63	
Y1 17+28	23	LT	0000						34	
Y1 14+98	21	RT	0000						37	
Y1 13+36	21	RT	0000						21	
Y1 12+73	21	RT	0000						18	
Y1 12+35	21	RT	0000						21	
Y1 12+77	21	LT	0000						10	
Y1 11+30	20	LT	0000						21	
Y1 11+40	21	RT	0000						29	
Y1 10+70	23	RT	0000						31	
L 18+45	27	RT	0000						38	
Y3 12+17	18	LT	0000						17	
L 22+61	28	RT	0000						26	
L 22+65	25	LT	0000						15	
L 22+91	25	LT	0000						21	
L 21+65	26	LT	0000						20	
L 23+52	27	RT	0000						22	
L 24+51	26	RT	0000						20	
L 24+65	26	LT	0000						22	
L 23+66	26	LT	0000						22	
L 23+94	26	LT	0000						16	
L 25+48	25	LT	0000						19	
L 26+06	24	LT	0000						20	
L 26+13	27	RT	0000						20	
L 26+42	27	RT	0000						21	
L 27+10	25	LT	0000						16	
L 28+04	26	LT	0000						16	
L 27+47	27	RT	0000						24	
L 29+05	27	RT	0000						20	
L 28+79	26	LT	0000						17	
L 30+04	27	RT	0000						21	
L 31+37	28	RT	0000						35	
L 31+60	26	LT	0000						21	
L 32+16	26	LT	0000						16	
L 32+12	27	RT	0000						17	
L 32+74	27	RT	0000						20	
SHEET TOTALS						9			1157	

ABBREVIATIONS

C.A.A.	CORRUGATED ALUMINIUM ALLOY
C.B.	CATCH BASIN
C.S.	CORRUGATED STEEL
D.I.	DROP INLET
G.D.I.	GRATED DROP INLET
H.D.P.E.	HIGH DENSITY POLYETHYLENE
J.B.	JUNCTION BOX
M.H.	MANHOLE
N.S.	NARROW SLOT
P.V.C.	POLYVINYL CHLORIDE
R.C.	REINFORCED CONCRETE
T.B.D.I.	TRAFFIC BEARING DROP INLET
T.B.J.B.	TRAFFIC BEARING JUNCTION BOX
W.S.	WIDE SLOT

Docusign Envelope ID: 5BEC07C3-22DF-4939-99FC-60F4D2BB7B09

8/17/99

COMPUTED BY:	Karen Hefner, PE	DATE:	Rev 11/24/25
CHECKED BY:	H Turner, PE	DATE:	Rev 11/24/25

NORTH CAROLINA DEPARTMENT OF TRANSPORTATION
DIVISION OF HIGHWAYS

PROJECT NO.	SHEET NO.
U-3609B	3D-12

Note: Invert Elevations indicated are for Bid Purposes only and shall not be used for project construction stakeout. See "Standard Specifications For Roads and Structures, Section 300-5".

LIST OF PIPES, ENDWALLS, ETC. (FOR PIPES 48 INCHES & UNDER)

| LINE & STATION / SIZE / THICKNESS OR GAUGE | OFFSET | STRUCTURE NUMBER FROM | STRUCTURE NUMBER TO | TOP ELEVATION FT. | INVERT ELEVATION FT. | INVERT ELEVATION FT. | % MINIMUM REQUIRED SLOPE | Side Drain Pipe (RCP, CSP, HDPE, PVC, or PP PIPE) 15 | 18 | 24 | DO NOT USE RCP | DO NOT USE CSP | DO NOT USE HDPE | DO NOT USE PVC | DO NOT USE PP PIPE | C. S. PIPE 12 .064 | 15 .064 | 18 .064 | 24 .064 | 30 .079 | 36 .079 | 42 .109 | 48 .109 | R. C. PIPE CLASS III 12 | 15 | 18 | 24 | 30 | 36 | 42 | 48 | R. C. PIPE CLASS IV 12 | 15 | 18 | 24 | 30 | 36 | 42 | 48 | R. C. PIPE CLASS V 12 | 15 | 18 | 24 | 30 | 36 | 42 | 48 | ENDWALLS STD. 838.01 OR STD. 838.11 (UNLESS NOTED OTHERWISE) CY | REINFORCED ENDWALLS CY | DRAINAGE STRUCTURE MASONRY CY | QUANTITIES FOR DRAINAGE STRUCTURES (NOTE: TOTAL LIN. FT. FOR PAY QUANTITY SHALL BE A + (1.3 X B)) A 0' THRU 5' EACH | B 5' THRU 10' LIN. FT. | 10' AND ABOVE LIN. FT. | C.B. STD. 840.01 OR STD. 840.02 | FRAME, GRATES, AND HOOD STD. 840.03 GRATE TYPE E | F | G | CONCRETE TRANSITIONAL SECTION D.I. STD. 852.04 OR STD. 852.06 | C.B. STD. 852.05 | D.I. STD. 840.14 OR STD. 840.15 | D.I. FRAME AND GRATES STD. 840.16 | G.D.I. TYPE "A" STD. 840.17 OR STD. 840.26 | G.D.I. TYPE "B" STD. 840.18 OR STD. 840.27 | G.D.I. TYPE "D" STD. 840.19 OR STD. 840.28 | G.D.I. (N.S. SAG) FRAME W/ 2 GRATES STD. 840.24 | G.D.I. (N.S. FLAT) FRAME W/ GRATE STD. 840.29 | G.D.I. (N.S. FLAT) FRAME W/ 2 GRATES STD. 840.29 | DRIVEWAY D.I. STD. 840.30 | FRAME W/ GRATE FOR DRIVEWAY STD. 840.30 | J.B. STD. 840.31 OR STD. 840.32 | ANGLED VANE GRATES AND FRAMES STD. 840.33 | T.B.J.B. STD. 840.34 | T.B.D.I. STD. 840.35 | T.B.D.I. FOR STEEL GRATES STD. 840.36 | STEEL FRAME WITH TWO GRATES STD. 840.37 | TEMP STEEL PLATE COVER MASONRY DRAINAGE | M.H. STD. 840.51, STD. 840.52, OR STD. 840.53 | M.H. FRAME AND COVER STD. 840.54 | ADJUST M.H. | PIPE CLEANOUT EA | FLOWABLE FILL CY | CONCRETE COLLARS CL. "B" STD. 840.72 CY | CONCRETE AND BRICK PIPE PLUG STD. 840.71 CY | PIPE REMOVAL LIN. FT. | REMARKS |
|---|---|---|---

Docusign Envelope ID: 5BEC07C3-22DF-4939-99FC-60F4D2BB7B09

8/17/99

COMPUTED BY:	Karen Hefner, PE	DATE:	Rev 11/24/25
CHECKED BY:	H Turner, PE	DATE:	Rev 11/24/25

NORTH CAROLINA DEPARTMENT OF TRANSPORTATION
DIVISION OF HIGHWAYS

PROJECT NO.	SHEET NO.
U-3609B	3D-13

Note: Invert Elevations indicated are for Bid Purposes only and shall not be used for project construction stakeout. See "Standard Specifications For Roads and Structures, Section 300-5".

LIST OF PIPES, ENDWALLS, ETC. (FOR PIPES 48 INCHES & UNDER)

Column headings (all blank on this sheet except those shown in the table below): TOP ELEVATION (FT.); INVERT ELEVATION (FT.); INVERT ELEVATION (FT.); MINIMUM REQUIRED SLOPE (%); Side Drain Pipe (RCP, CSP, HDPE, PVC, or PP PIPE) 15, 18, 24, DO NOT USE RCP, DO NOT USE CSP, DO NOT USE HDPE, DO NOT USE PVC, DO NOT USE PP PIPE; C. S. PIPE 12 (.064), 15 (.064), 18 (.064), 24 (.064), 30 (.079), 36 (.079), 42 (.109), 48 (.109); R. C. PIPE CLASS III 12, 15, 18, 24, 30, 36, 42, 48; R. C. PIPE CLASS IV 12, 15, 18, 24, 30, 36, 42, 48; R. C. PIPE CLASS V 12, 15, 18, 24, 30, 36, 42, 48; ENDWALLS STD. 838.01 OR STD. 838.11 (UNLESS NOTED OTHERWISE) (CY); REINFORCED ENDWALLS (CY); DRAINAGE STRUCTURE MASONRY (CY); QUANTITIES FOR DRAINAGE STRUCTURES (NOTE: TOTAL LIN. FT. FOR PAY QUANTITY SHALL BE A + (1.3 X B)) 0' THRU 5' (EACH), A 5' THRU 10' (LIN. FT.), B 10' AND ABOVE (LIN. FT.); C.B. STD. 840.01 OR STD. 840.02; FRAME, GRATES, AND HOOD STD. 840.03 GRATE TYPE E, F, G; CONCRETE TRANSITIONAL SECTION D.I. STD. 852.04 OR STD. 852.06, C.B. STD. 852.05; D.I. STD. 840.14 OR STD. 840.15; D.I. FRAME AND GRATES STD. 840.16; G.D.I. TYPE "A" STD. 840.17 OR STD. 840.26; G.D.I. TYPE "B" STD. 840.18 OR STD. 840.27; G.D.I. TYPE "D" STD. 840.19 OR STD. 840.28; G.D.I. (N.S. SAG) FRAME W/ 2 GRATES STD. 840.24; G.D.I. (N.S. FLAT) FRAME W/ GRATE STD. 840.29; G.D.I. (N.S. FLAT) FRAME W/ 2 GRATES STD. 840.29; DRIVEWAY D.I. STD. 840.30; FRAME W/ GRATE FOR DRIVEWAY STD. 840.30; J.B. STD. 840.31 OR STD. 840.32; ANGLED VANE GRATES AND FRAMES STD. 840.33; T.B.J.B. STD. 840.34; T.B.D.I. STD. 840.35; T.B.D.I. FOR STEEL GRATES STD. 840.36; STEEL FRAME WITH TWO GRATES STD. 840.37; TEMP STEEL PLATE COVER MASONRY DRAINAGE; M.H. STD. 840.51, STD. 840.52, OR STD. 840.53; M.H. FRAME AND COVER STD. 840.54; ADJUST M.H.; PIPE CLEANOUT (EA); FLOWABLE FILL (CY); CONCRETE COLLARS CL. "B" STD. 840.72 (CY); CONCRETE AND BRICK PIPE PLUG STD. 840.71 (CY).

LINE & STATION / SIZE / THICKNESS OR GAUGE	OFFSET		STRUCTURE NUMBER FROM	STRUCTURE NUMBER TO	PIPE REMOVAL (LIN. FT.)	REMARKS
L 84+43	13	RT	0000		28	
L 83+79	15	RT	0000		29	
L 84+47	40	LT	0000		18	
L 82+52	35	LT	0000		40	
L 82+08	32	LT	0000		33	
L 81+50	31	LT	0000		76	
L 85+99	14	RT	0000		25	
L 86+00	39	LT	0000		30	
L 85+77	40	LT	0000		17	
L 88+27	34	LT	0000		24	
L 88+47	19	RT	0000		45	
L 89+85	23	RT	0000		45	
L 90+78	25	RT	0000		45	
Y13 11+01	17	RT	0000		45	
L 94+41	35	RT	0000		52	
L 95+33	18	LT	0000		20	
L 96+10	15	LT	0000		27	
L 96+10	38	RT	0000		19	
L 97+24	19	LT	0000		20	
L 98+49	24	LT	0000		20	
L 99+08	27	LT	0000		19	
L 99+50	29	LT	0000		20	
L 97+59	33	RT	0000		24	
L 100+31	31	LT	0000		20	
L 102+67	36	LT	0000		40	
L 103+40	38	LT	0000		97	
L 104+49	39	LT	0000		109	
L 105+58	38	LT	0000		99	
L 106+63	35	LT	0000		99	
L 107+37	32	LT	0000		40	
L 108+10	30	LT	0000		99	
L 109+03	27	LT	0000		79	
L 109+86	27	LT	0000		80	
L 110+77	29	LT	0000		99	
L 111+29	36	LT	0000		8	
L 111+34	31	LT	0000		9	
L 111+28	3	LT	0000		52	
L 111+75	20	RT	0000		17	
L 112+22	31	LT	0000		20	
L 112+59	32	LT	0000		25	
L 112+92	32	LT	0000		26	
L 114+44	32	LT	0000		18	
L 115+03	32	LT	0000		13	
L 115+98	29	LT	0000		20	
L 115+39	20	RT	0000		21	
L 116+57	20	RT	0000		16	
L 117+47	25	LT	0000		12	
L 117+85	24	LT	0000		16	
L 119+52	36	RT	0000		20	
L 119+58	37	LT	0000		38	
SHEET TOTALS					1913	

ABBREVIATIONS

C.A.A.	CORRUGATED ALUMINIUM ALLOY
C.B.	CATCH BASIN
C.S.	CORRUGATED STEEL
D.I.	DROP INLET
G.D.I.	GRATED DROP INLET
H.D.P.E.	HIGH DENSITY POLYETHYLENE
J.B.	JUNCTION BOX
M.H.	MANHOLE
N.S.	NARROW SLOT
P.V.C.	POLYVINYL CHLORIDE
R.C.	REINFORCED CONCRETE
T.B.D.I.	TRAFFIC BEARING DROP INLET
T.B.J.B.	TRAFFIC BEARING JUNCTION BOX
W.S.	WIDE SLOT

Docusign Envelope ID: 5BEC07C3-22DF-4939-99FC-60F4D2BB7B09

8/17/99

COMPUTED BY:	Karen Hefner, PE	DATE:	Rev 12/02/25
CHECKED BY:	H Turner, PE	DATE:	Rev 12/02/25

NORTH CAROLINA DEPARTMENT OF TRANSPORTATION
DIVISION OF HIGHWAYS

PROJECT NO.	SHEET NO.
U-3609B	3D-14

Note: Invert Elevations indicated are for Bid Purposes only and shall not be used for project construction stakeout. See "Standard Specifications For Roads and Structures, Section 300-5".

LIST OF PIPES, ENDWALLS, ETC. (FOR PIPES 48 INCHES & UNDER)

LINE & STATION	OFFSET		STRUCTURE NUMBER FROM	TO	TOP ELEVATION FT.	INVERT ELEVATION FT.	INVERT ELEVATION FT.	MINIMUM REQUIRED SLOPE %	PIPE REMOVAL LIN. FT.	REMARKS
L 119+92	37	LT	0000						21	
L 121+19	42	LT	0000						20	
L 122+05	43	LT	0000						30	
L 122+01	53	RT	0000						20	
L 18+55	29	LT	0000						146	
L 19+51	27	LT	0000						21	
L 19+33	27	LT	0000						8	
Y3 12+53	20	RT	0000						41	
L 38+95	53	RT	0000						50	
Y1 21+48	26	RT	0000						18	
Y1 20+87	31	RT	0000						55	
Y1 22+94	27	RT	0000						19	
Y1 23+42	26	RT	0000						22	
Y1 22+97	25	LT	0000						20	
L 19+90	27	LT	0000						20	
L 86+16	58	LT	0000						13	
Y13 10+18	18	LT	0000						20	
Y10 11+93	24	LT	0000						24	
L 95+58	13	RT	0000						47	
L 95+64	11	RT	0000						51	
Y20 14+93	70	RT	0000						42	
Y20 14+73	2	RT	0000						49	
Y19 12+70	22	LT	0000						25	
Y20 20+05	23	LT	0000						19	
Y20 23+38	26	RT	0000						52	
Y20 23+36	25	LT	0000						20	
Y20 11+96	34	LT	0000						17	

SIZE / THICKNESS OR GAUGE

Column	SHEET TOTALS	PROJECT TOTALS
Side Drain Pipe (RCP, CSP, HDPE, PVC, or PP PIPE) 15		838
Side Drain Pipe 18		
Side Drain Pipe 24		
DO NOT USE RCP		
DO NOT USE CSP		
DO NOT USE HDPE		
DO NOT USE PVC		
DO NOT USE PP PIPE		
C. S. PIPE 12 (.064)		
C. S. PIPE 15 (.064)		
C. S. PIPE 18 (.064)		
C. S. PIPE 24 (.064)		
C. S. PIPE 30 (.079)		
C. S. PIPE 36 (.079)		
C. S. PIPE 42 (.109)		
C. S. PIPE 48 (.109)		
R. C. PIPE CLASS III 12		
R. C. PIPE CLASS III 15		
R. C. PIPE CLASS III 18		18
R. C. PIPE CLASS III 24		96
R. C. PIPE CLASS III 30		
R. C. PIPE CLASS III 36		48
R. C. PIPE CLASS III 42		16
R. C. PIPE CLASS III 48		
R. C. PIPE CLASS IV 12		
R. C. PIPE CLASS IV 15		10726
R. C. PIPE CLASS IV 18		1452
R. C. PIPE CLASS IV 24		3744
R. C. PIPE CLASS IV 30		1816
R. C. PIPE CLASS IV 36		2796
R. C. PIPE CLASS IV 42		112
R. C. PIPE CLASS IV 48		
R. C. PIPE CLASS V 12		
R. C. PIPE CLASS V 15		64
R. C. PIPE CLASS V 18		
R. C. PIPE CLASS V 24		
R. C. PIPE CLASS V 30		
R. C. PIPE CLASS V 36		
R. C. PIPE CLASS V 42		
R. C. PIPE CLASS V 48		
ENDWALLS STD. 838.01 OR STD. 838.11 (UNLESS NOTED OTHERWISE) CY		29.300
REINFORCED ENDWALLS CY		
DRAINAGE STRUCTURE MASONRY CY		
QUANTITIES FOR DRAINAGE STRUCTURES (NOTE: TOTAL LIN. FT. FOR PAY QUANTITY SHALL BE A + (1.3 X B)) 0' THRU 5' EACH		196
A: 5' THRU 10' LIN. FT. / B: 10' AND ABOVE LIN. FT.		22.6
C.B. STD. 840.01 OR STD. 840.02		157
FRAME, GRATES, AND HOOD STD. 840.03 GRATE TYPE E		24
GRATE TYPE F		72
GRATE TYPE G		61
(blank)		
CONCRETE TRANSITIONAL SECTION D.I. STD. 852.04 OR STD. 852.06		9
CONCRETE TRANSITIONAL SECTION C.B. STD. 852.05		15
D.I. STD. 840.14 OR STD. 840.15		36
D.I. FRAME AND GRATES STD. 840.16		36
G.D.I. TYPE "A" STD. 840.17 OR STD. 840.26		
G.D.I. TYPE "B" STD. 840.18 OR STD. 840.27		1
G.D.I. TYPE "D" STD. 840.19 OR STD. 840.28		
G.D.I. (N.S. SAG) FRAME W/ 2 GRATES STD. 840.24		1
G.D.I. (N.S. FLAT) FRAME W/ GRATE STD. 840.29		
G.D.I. (N.S. FLAT) FRAME W/ 2 GRATES STD. 840.29		2
DRIVEWAY D.I. STD. 840.30		
FRAME W/ GRATE FOR DRIVEWAY STD. 840.30		
J.B. STD. 840.31 OR STD. 840.32		2
ANGLED VANE GRATES AND FRAMES STD. 840.33		
T.B.J.B. STD. 840.34		3
T.B.D.I. STD. 840.35		2
T.B.D.I. FOR STEEL GRATES STD. 840.36		
STEEL FRAME WITH TWO GRATES STD. 840.37		
TEMP STEEL PLATE COVER MASONRY DRAINAGE		
(blank)		
M.H. STD. 840.51, STD. 840.52, OR STD. 840.53		
M.H. FRAME AND COVER STD. 840.54		5
ADJUST M.H.		1
PIPE CLEANOUT EA		2
FLOWABLE FILL CY		13
CONCRETE COLLARS CL. "B" STD. 840.72 CY		0.8930
CONCRETE AND BRICK PIPE PLUG STD. 840.71 CY		
PIPE REMOVAL LIN. FT.	890	5507

ABBREVIATIONS

C.A.A.	CORRUGATED ALUMINIUM ALLOY
C.B.	CATCH BASIN
C.S.	CORRUGATED STEEL
D.I.	DROP INLET
G.D.I.	GRATED DROP INLET
H.D.P.E.	HIGH DENSITY POLYETHYLENE
J.B.	JUNCTION BOX
M.H.	MANHOLE
N.S.	NARROW SLOT
P.V.C.	POLYVINYL CHLORIDE
R.C.	REINFORCED CONCRETE
T.B.D.I.	TRAFFIC BEARING DROP INLET
T.B.J.B.	TRAFFIC BEARING JUNCTION BOX
W.S.	WIDE SLOT

Docusign Envelope ID: 5BEC07C3-22DF-4939-99FC-60F4D2BB7B09

8/17/99

COMPUTED BY:	Karen Hefner, PE	DATE:	Rev 11/24/25
CHECKED BY:	H Turner, PE	DATE:	Rev 11/24/25

PROJECT NO.	SHEET NO.
U-3609B	3D-15

NORTH CAROLINA DEPARTMENT OF TRANSPORTATION
DIVISION OF HIGHWAYS

**Note: Invert Elevations indicated are for Bid Purposes only and shall not be used for project construction stakeout.
See "Standard Specifications For Roads and Structures, Section 300-5".**

LIST OF PIPES, ENDWALLS, ETC. (FOR PIPES 54 INCHES & OVER)

SIZE / THICKNESS OR GAUGE

LINE & STATION	OFFSET	STRUCTURE NUMBER FROM	STRUCTURE NUMBER TO	TOP ELEVATION FT.	INVERT ELEVATION FT.	INVERT ELEVATION FT.	MINIMUM REQUIRED SLOPE %	Side Drain Pipe (RCP, CSP, HDPE, PVC, or PP PIPE) 54	Side Drain 60	Side Drain 66	Side Drain 72	DO NOT USE RCP	DO NOT USE CSP	DO NOT USE HDPE	DO NOT USE PVC	DO NOT USE PP PIPE	C. S. PIPE 54	C. S. PIPE 60	R. C. PIPE CLASS III 54	CLASS III 60	CLASS III 66	CLASS III 72	R. C. PIPE CLASS IV 54	CLASS IV 60	CLASS IV 66	CLASS IV 72	R. C. PIPE CLASS V 54	CLASS V 60	CLASS V 66	CLASS V 72	CLASS V 78	CLASS V 84
L 64+50	36 LT	0730		120.4																												
		0730	0733		114.0	113.9	0.4																28									
L 63+67	80 LT	0734																														
		0734	0735					44																								
L 65+02	67 RT	0840		119.5																												
		0840	0730		114.5	114.0	0.3																116									
L 95+60	38 RT	1007		121.5																												
		1007	1043		113.4	113.2	0.5																28									
L 95+62	38 LT	1016		120.7																												
		1016	1053		114.2	113.2																					100					
L 95+54	38 LT	1017		120.7																												
		1017	1007		114.2	113.5	0.5																				76					
L 95+55	63 LT	1040		119.5																												
		1040	1017		115.2	114.2	0.4																28									
L 95+60	63 LT	1050		119.5																												
		1050	1016		115.2	114.2																	28									
SHEET TOTALS								44															228				176					
PROJECT TOTALS								44															228				176					

QUANTITIES FOR DRAINAGE STRUCTURES — NOTE: TOTAL LIN. FT. FOR PAY QUANTITY SHALL BE A + (1.3 X B)

FRAME, GRATES, AND HOOD STD. 840.03

FROM	TO	ENDWALLS STD. 838.01 OR STD. 838.11 (UNLESS NOTED OTHERWISE) CY	REINFORCED ENDWALLS CY	DRAINAGE STRUCTURE MASONRY CY	0' THRU 5' EACH	A: 5' THRU 10' LIN. FT.	B: 10' AND ABOVE LIN. FT.	C.B. STD. 840.01 OR STD. 840.02	GRATE TYPE E	GRATE TYPE F	GRATE TYPE G
0730				1.498				1		1	
0734			5.200								
0840			5.000								
1007				1.971				1	1		
1016				1.606				1	1		
1017				1.642				1	1		
1040			6.900								
1050			---								
SHEET TOTALS			17.100	6.717				4	3	1	
PROJECT TOTALS			17.100	6.717				4	3	1	

FROM	TO	CONCRETE TRANSITIONAL SECTION: D.I. STD. 852.04 OR STD. 852.06	CONCRETE TRANSITIONAL SECTION: C.B. STD. 852.05	OPEN THROAT C.B. STD. 840.04 OR STD. 840.05	CONCRETE BRIDGE APPROACH D.I. STD. 840.13	D.I. STD. 840.14 OR STD. 840.15	D.I. FRAME AND GRATES STD. 840.16	G.D.I. TYPE "A" STD. 840.17 OR STD. 840.26	G.D.I. TYPE "B" STD. 840.18 OR STD. 840.27	G.D.I. TYPE "D" STD. 840.19 OR STD. 840.28	G.D.I. (W.S. FLAT) FRAME WITH GRATE STD. 840.20	G.D.I. (W.S. FLAT) FRAME W/ 2 GRATES STD. 840.20	G.D.I. (W.S. SAG) FRAME W/ GRATE STD. 840.22	G.D.I. (W.S. SAG) FRAME W/ 2 GRATES STD. 840.22	G.D.I. (N.S. SAG) FRAME W/ GRATE STD. 840.24	G.D.I. (N.S. SAG) FRAME W/ 2 GRATES STD. 840.24	G.D.I. (N.S. FLAT) FRAME W/ GRATE STD. 840.29	G.D.I. (N.S. FLAT) FRAME W/ 2 GRATES STD. 840.29	DRIVEWAY D.I. STD. 840.30	FRAME W/ GRATE FOR DRIVEWAY STD. 840.30	J.B. STD. 840.31 OR STD. 840.32	ANGLED VANE GRATES AND FRAMES STD. 840.33	T.B.J.B. STD. 840.34	T.B.D.I. STD. 840.35	T.B.D.I. FOR STEEL GRATES STD. 840.36	STEEL FRAME WITH TWO GRATES STD. 840.37	TEMP STEEL PLATE COVER MASONRY DRAINAGE	PIPE CLEANOUT EA	FLOWABLE FILL CY	CONCRETE COLLARS CL. "B" STD. 840.72 CY	CONCRETE AND BRICK PIPE PLUG STD. 840.71 CY	PIPE REMOVAL LIN. FT.	REMARKS
0734																																	EW for Single 54" - Rdwy Std 838.21
0840																																	EW for Single 54" - Rdwy Std 838.21
1040																																	EW for Double 54" - Rdwy Std 838.22
1050																																	EW for Double 54" - Rdwy Std 838.22; See 1040

ABBREVIATIONS

- C.A.A. CORRUGATED ALUMINIUM ALLOY
- C.B. CATCH BASIN
- C.S. CORRUGATED STEEL
- D.I. DROP INLET
- G.D.I. GRATED DROP INLET
- H.D.P.E. HIGH DENSITY POLYETHYLENE
- J.B. JUNCTION BOX
- M.H. MANHOLE
- N.S. NARROW SLOT
- P.V.C. POLYVINYL CHLORIDE
- R.C. REINFORCED CONCRETE
- T.B.D.I. TRAFFIC BEARING DROP INLET
- T.B.J.B. TRAFFIC BEARING JUNCTION BOX
- W.S. WIDE SLOT

Docusign Envelope ID: 5BEC07C3-22DF-4939-99FC-60F4D2BB7B09

12/06/07

COMPUTED BY: HUNSBERGER, W.S. DATE: 10/03/24
CHECKED BY: HAMM, J.R. DATE: 10/03/24

STATE OF NORTH CAROLINA
DIVISION OF HIGHWAYS

SUMMARY OF SUBSURFACE DRAINAGE

LINE	STATION	STATION	LOCATION LT/RT/CL	DRAIN TYPE* UD/BD/SD	LF
-L-	66+00	68+00	LT & RT	SD	400
-L-	74+00	80+00	LT & RT	SD	1200
CONTINGENCY				SD	2000
			TOTAL:		3600
			SAY:		3600

*UD = UNDERDRAIN
*BD = BLIND DRAIN
*SD = SUBSURFACE DRAIN

SUMMARY OF AGGREGATE SUBGRADE /STABILIZATION

LINE	STATION	STATION	AGGREGATE TYPE* ASU(1/2)/ AST	AGGREGATE THICKNESS INCHES [8" FOR ASU (2)]	SHALLOW UNDERCUT CY	CLASS IV SUBGRADE STABILIZATION TONS	GEOTEXTILE FOR SUBGRADE STABILIZATION SY	STABILIZER AGGREGATE TONS	CLASS IV AGGREGATE STABILIZATION TONS
-L-	66+75	67+25	ASU(1)	12	50	100	150	–	–
-L-	74+50	75+75	ASU(1)	12	200	450	650	–	–
-L-	77+00	79+50	ASU(1)	12	150	450	650	–	–
-L-	89+75	91+50	ASU(1)	12	150	500	750	–	–
-L-	119+50	122+25	ASU(1)	12	125	375	550	–	–
-Y10-	10+90	14+00	ASU(1)	12	225	550	725	–	–
SUBTOTALS			ASU(1)	12	900	2425	3475	–	–
CONTINGENCY			ASU(1)	12	2850	6650	10100	–	–
CONTINGENCY			ASU(2)	8	–	–	–	–	300
			TOTAL CY /TONS /SY:		3750	9075**	13575**	–	300
			SAY:		3750	9075**	13575**	–	300

*ASU(1/2) = AGGREGATE SUBGRADE (TYPE 1 OR 2)
*AST = AGGREGATE STABILIZATION
**Total tons of "Class IV Subgrade Stabilization" and total square yards of "Geotextile for Soil Stabilization" are only the estimated quantities for ASU(1/2)/AST and may only represent a portion of the subgrade stabilization and geotextile quantities shown in the Item Sheets of the Proposal.

11/25/2025
U:\Roadway\Proj\U3609B_rdy_3G-1.dgn
a1sjdm

Docusign Envelope ID: 5BEC07C3-22DF-4939-99FC-60F4D2BB7B09

12/06/07

COMPUTED BY: AGI DATE: 12/02/24
CHECKED BY: KNH DATE: 12/03/24

PROJECT REFERENCE NO.	SHEET NO.
U-3609B	3P-1

STATE OF NORTH CAROLINA
DIVISION OF HIGHWAYS

PARCEL INDEX SHEET

PARCEL No.	SHEET No.	PROPERTY OWNER NAME
1	4	N. S. HOLDINGS LLC
2	4,15	ROBERT W. SUTTON & WIFE
3	4	JIMMY & TARA RODRIGUEZ
4	4	TINH PHAM
5	4	WILLIE FRANK SMITH
6	4	COUNTY OF WAYNE
7	4	JERRY PRESTON CULLIPHER, ETAL
8	4	ROBERT W. SUTTON & ROSE C. SUTTON
9	4	ZULA D. STRICKLAND
10	4	SELENA DINH & HUSBAND HUAN NGUYEN
11	4,5	WILLARD ANTHONY BARROW
12	4	CIRCLE K STORES, INC
13	4	STEVEN. M. LANGSTON
14	4	PATRICIA S. RULLMAN
15	4	MARK DANIEL YATES & LEESA YATES
16	4	WOOD-MAC LLC
17	4	WOOD-MAC LLC
18	4,5	WOOD-MAC LLC
19	5	PRIDE HOUSE FAMILY HOLDINGS, LLC
20	5	KENNETH FALLIN & LISA FALLIN
21	5	PRIDE HOUSE FAMILY HOLDINGS LLC ETAL
22	5	EVELYN H. FAIL
23	5	JIMMY B COX, PERSONAL REPS FOR THE ESTATE OF CAROLYN B COX & ASHLEIGH CAROLINE BILODEAU & CHRISTAL LEIGH BILODEU
24	5	IRENE BARROW
25	5	ANISLEY PEREZ ALUM & LAZARO B. HERNANDEZ
26	5	JR LEGACY HOMES, LLC
27	5	ALLEN D. CANNON, ET UX
28	5	CARLOS M. MONDRAGON
29	5	STEPHEN JACKSON & ALFRED GRAHAM
30	5,6	STEPHEN JACKSON
31	5	HUAN NGUYEN
32	5	CAROLYN L. PITTMAN
33	5	ALLEN DALE CANNON, SR. ET UX
34	5	SELENA DINH
35	5	BETTY ELIZABETH WATSON
36	5	JAMES GREGORY HERRING
37	5	JO ANN PRICE HAM
38	5	PERRY GLENN COLTRANE
39	5	DEBRA C. SUTTON
40	5	PRIDE HOUSE FAMILY HOLDINGS LLC
41	5,6	CLINTON M. BRADNER, ET UX
42	6	BOBBY FOREST
43	6	LEROY SUMPTER, SR ET UX
44	6	MARIE CLALITE CHARLES
45	6	BONIZE AUGUSTIN
46	6	REGINAL REID II & ANAMARIE RODRIGUEZ
47	6	VIRGIL R. EDWARDS, ET UX
48	6	GERALE J. CONDRON
49	6	DORIS L. LITTLETON
50	6	GERALD L. VAILS, ET AL
51	6	DONNIE JOE SKELTON II
52	6	FRANCIS WASHBURN, ET UX
53	6	FRANCIS WASHBURN, ET UX
54	6,7	KELA M. PRESTON COKER
55	6	NORMA G CONSENTINO
56	6	DEMOCKO PROPERTIES, LLC
57	6	DEMOCKO PROPERTIES, LLC
58	6	DEMOCKO PROPERTIES, LLC
59	6	FAITH PRESBYTERIAN CHURCH
60	6	JILIAN DEBORAH TANT

PARCEL No.	SHEET No.	PROPERTY OWNER NAME
61	6	JAMES BROWN
62	6,7	MELISSA JASMIN OLAGUE RODRIGUEZ
63	7	RICKY L. BROWNING, ET UX
64	7	PRISCILLA BROWNING RACHEL, ET VIR
65	7	ROBBIE E. GODBEY
66	7,8	ROBERT E. GODBEY
67	7	DONALD EUGENE KIMBRELL ET UX
68	7	STEPHEN L.WOOD
69	7	H WEIL & BROS, LLC
70	7,8	H WEIL & BROS, LLC
71	8	ATLAS DEV. CO., INC
72	8	ATLAS DEV. CO., INC.
73	8	ATLAS DEV. CO., INC.
74	8	HORIZON CAPITAL GROUP, LLC
75	8	HORIZON CAPITAL GROUP, LLC
76	8	GLENWOOD R SMITH
77	8,9	JAMES A MOORING ET UX
78	8	KAREN CRUMPLER
79	8,16	MYRTLE ROWE GLOVER
80	8,9	TRUSTEES OF WOODS GROVE PENTECOSTAL FREE WILL BAPTIST CHURCH
81	9	PHILIP CRAIG SMITH ET UX
82	9	PHILIP CRAIG SMITH ET UX
83	9	GLENWOOD RAY SMITH, ET UX
84	9	YONG S ELISARRAZ ET VIR
85	9	TRENTON SETH MARLOWE
86	9	TRENTON SETH MARLOWE
87A	9	GOLDSBORO HOLDINGS, LLC
87B	9	GOLDSBORO HOLDINGS, LLC
88	9,10	KENNETH DARYL PEELE
89	9	WOODS GROVE PENTECOSTAL FREE WILL BAPTIST CHURC, TRUSTEES
90	9	ZCO PROPERTIES, LLC
91	9	MICHAEL DWIGHT PEELE
92	9,10	DEPARTMENT OF TRANSPORTATION
93	10	KENETH DARYL PEELE
94Z	10	KENNETH RAY BOYETTE, JR
95Z	10	KENNETH RAY BOYETTE, JR
96Z	10	KENNETH RAY BOYETTE, JR
97	10	JOAN PEELE TYNDALL ESTATE
98	10,11	DURWOOD LEE PEELE & HEIRS
99	10	JONATHAN B DANIELS ET UX
100	10	CIRCLE N LLC
101	10	ROGER S. ANDERSON
102	10	TERESA S HAITHCOCK
103	10,11	JCTB LLC
104	11	RONALD SCHULTZE & PAULA SCHULTZE
105	11	DEPARTMENT OF TRANSPORTATION
106	11	FILIBERTOR AMBRIZ, ET UX
107	11	REGINA CLARKE
108	11	REGINA CLARKE
109	11	DIANNE ANN PERRY
110	11	TYLER R. DAVIS & TERRA SIELSKI
111	11	ANNA EDWARDS BRYSON
112	11	DEPARTMENT OF TRANSPORTATION
113	11,12	MICHAEL D KEARNEY & REX KEARNEY
114	11,12	DAVID M. LANAVILLE
115	11	JOHN SELBY WADE, ET UX
116	11,12	JOHN SELBY WADE
117	11,12	JOHN PHILIP WADE ET UX

11/5/2025
U:\Roadway\Proj\U3609B_rdy_3P-1.dgn
Alsleu

Docusign Envelope ID: 5BEC07C3-22DF-4939-99FC-60F4D2BB7B09

STATE OF NORTH CAROLINA
DIVISION OF HIGHWAYS

PARCEL INDEX SHEET

PARCEL No.	SHEET No.	PROPERTY OWNER NAME
118	12	MICHEAL DENNY KEARNEY
119	12	BOBBY FOREST,ET UX
120	12	BOBBY FOREST,ET UX
121	12	BOBBY FOREST,ET UX
122	12	JEFFREY DAVID FORREST
123	12	BOBBY FOREST
124	12	NO CLAIM
125	12	KEITH A.WADE
174	15	ANDREA LAWRENCE
175	15	NEWTON HOMES LLC
176	4,15	NEWTON HOMES LLC
177	15	BRIAN DOUGLAS SNYDER
178	15	MARY ANNE & ANNE P. BOUGHTER
179	16	TRUSTEES OF WOODS GROVE PENTECOSTAL FREE WILL BAPTIST CHURCH
180	16	BETTY J. SMITH, ET VIR
181	16	REGINA M. THOMAS
182	16	CELIA ENEDINA SANCHEZ HERNANDEZ
183	16	CHARLES ALLEN GINN
184	16	DOROTHY LORRAINE GINN HARRIS
185	16	TRUSTEES OF WOODS GROVE PENTECOSTAL FREE WILL BAPTIST CHURCH
186	16	CH WOODS GROVE PENTECOSTAL BAPTIST CHURCH
187	16	LISLER OROZCO & LILIANA PEREZ DIAZ
190	16	PAUL STEPHEN HARRIS, JR.
191	16	CHARLES ALLEN GINN
192	16	CHARLES ALLEN GINN
193	16	LIONEL V GINN AND WIFE KAY

PARCEL No.	SHEET No.	PROPERTY OWNER NAME
161	13	MAXWELL FOODS,LLC
165	13	MAXWELL FOODS,LLC
166	13	HARRISON CAPITAL,LLC
167	13	HARRISON CAPITAL,LLC
168	13,14	GLENN THOMAS
169	13	ANN M SMITH
170	13,14	JO ANN CRUSE SUMMERLIN
171	14	DONNA E.TOLER & BRANDON E.CASEY
172	14	ANN M. SMITH
173	14	ANN M. SMITH
194	14	HARRISON CAPITAL,LLC

Docusign Envelope ID: 5BEC07C3-22DF-4939-99FC-60F4D2BB7B09

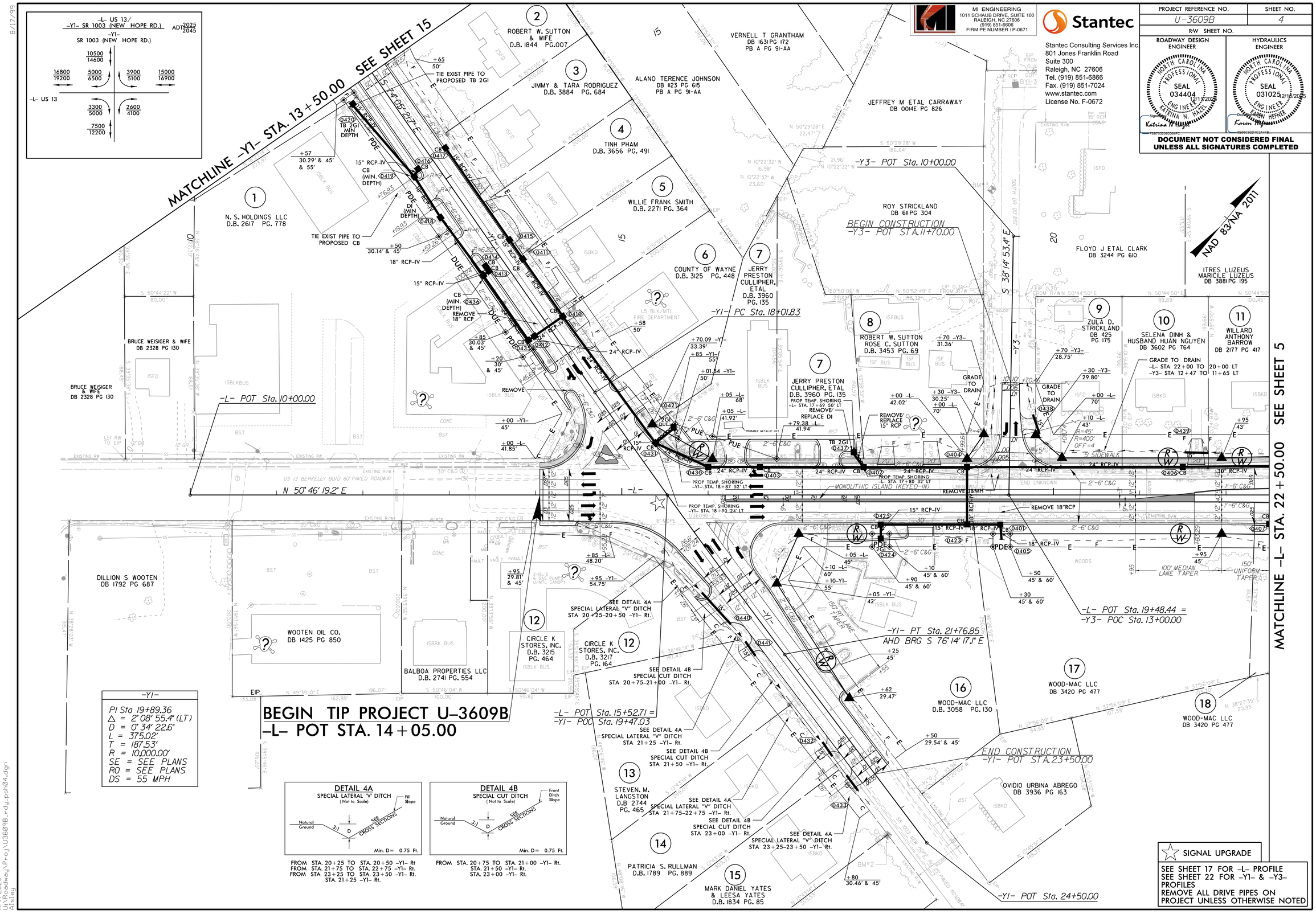

Docusign Envelope ID: 5BEC07C3-22DF-4939-99FC-60F4D2BB7B09

MI ENGINEERING
1011 SCHAUB DRIVE, SUITE 100
RALEIGH, NC 27606
(919) 851-6606
FIRM PE NUMBER : P-0671

Stantec
Stantec Consulting Services Inc.
801 Jones Franklin Road
Suite 300
Raleigh, NC 27606
Tel. (919) 851-6866
Fax. (919) 851-7024
www.stantec.com
License No. F-0672

PROJECT REFERENCE NO.	SHEET NO.
U-3609B	5
R/W SHEET NO.	

ROADWAY DESIGN ENGINEER: NORTH CAROLINA PROFESSIONAL SEAL 034404 ENGINEER KATRINA N. HAZEL — 12/11/2025

HYDRAULICS ENGINEER: NORTH CAROLINA PROFESSIONAL SEAL 031025 ENGINEER KAREN HEFNER — 12/10/2025

DOCUMENT NOT CONSIDERED FINAL UNLESS ALL SIGNATURES COMPLETED

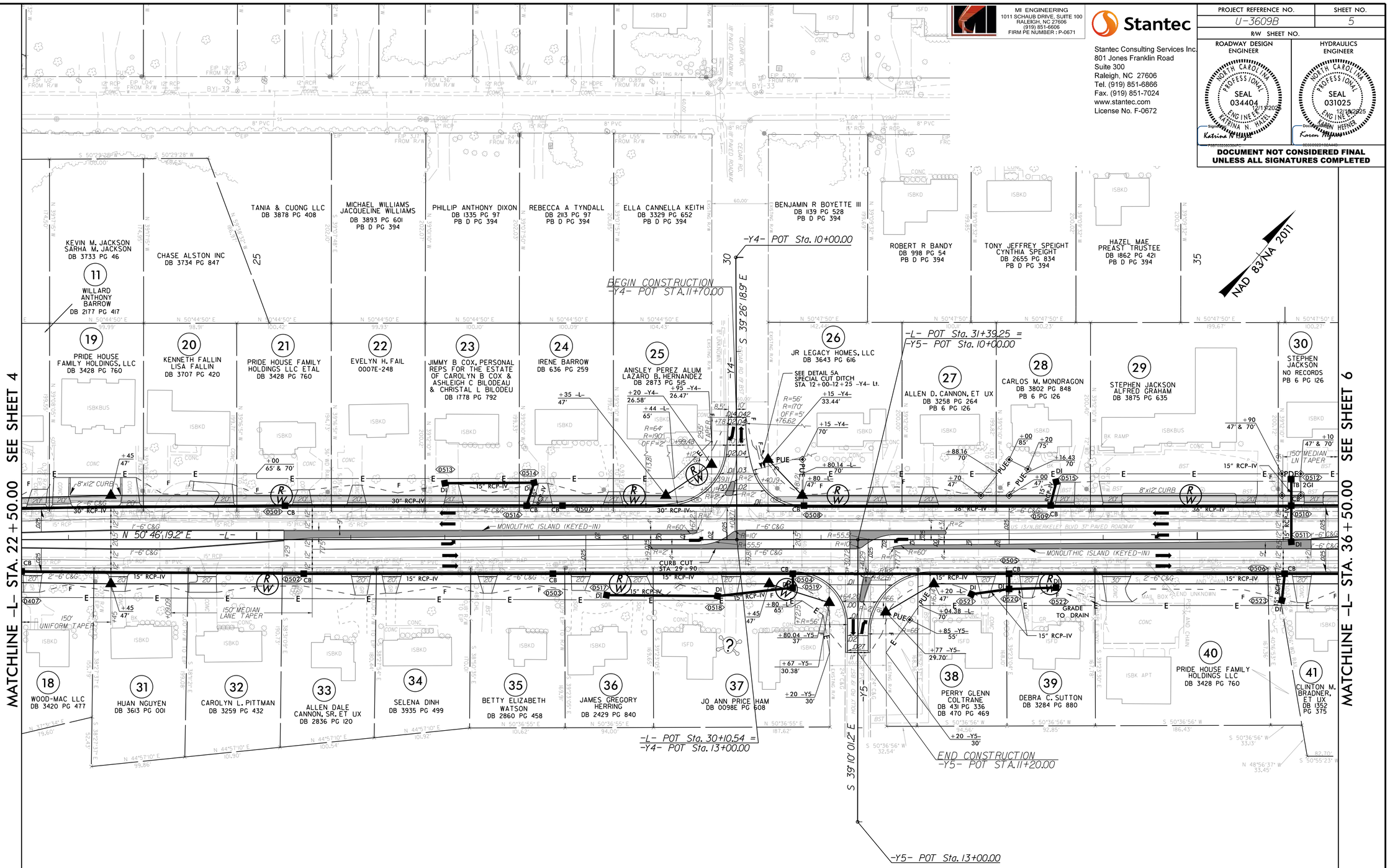

DETAIL 5A
SPECIAL CUT DITCH
(Not to Scale)

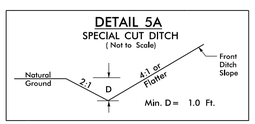

FROM STA. 12+00 TO STA. 12+25 -Y4- LT

SEE SHEET 17 FOR –L– PROFILE
SEE SHEET 22 FOR –Y4– PROFILE
SEE SHEET 23 FOR –Y5– PROFILE
REMOVE ALL DRIVE PIPES ON PROJECT UNLESS OTHERWISE NOTED

8/17/99
11/25/2025
U:\Roadway\Proj\U3609B_rdy_psh05.dgn
Aisley

Docusign Envelope ID: 5BEC07C3-22DF-4939-99FC-60F4D2BB7B09

MI ENGINEERING
1011 SCHAUB DRIVE, SUITE 100
RALEIGH, NC 27606
(919) 851-6606
FIRM PE NUMBER : P-0671

Stantec
Stantec Consulting Services Inc.
801 Jones Franklin Road
Suite 300
Raleigh, NC 27606
Tel. (919) 851-6866
Fax. (919) 851-7024
www.stantec.com
License No. F-0672

PROJECT REFERENCE NO.	SHEET NO.
U-3609B	6
R/W SHEET NO.	

ROADWAY DESIGN ENGINEER
NORTH CAROLINA PROFESSIONAL SEAL 034404 ENGINEER KATRINA N. HAGEL
12/11/2025
Katrina N Hagel

HYDRAULICS ENGINEER
NORTH CAROLINA PROFESSIONAL SEAL 031025 ENGINEER KAREN HEFNER
12/10/2025
Karen Hefner

DOCUMENT NOT CONSIDERED FINAL UNLESS ALL SIGNATURES COMPLETED

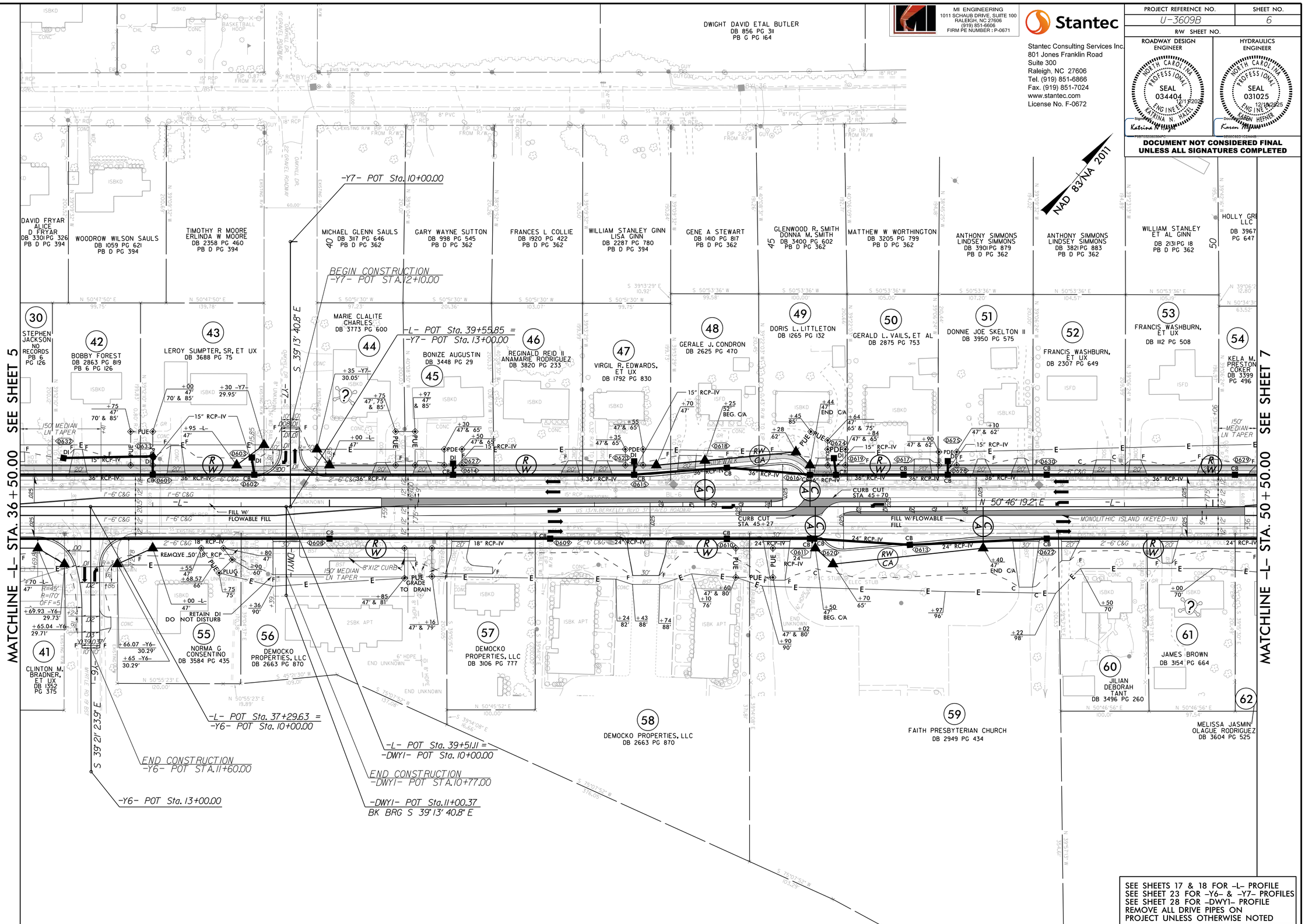

SEE SHEETS 17 & 18 FOR -L- PROFILE
SEE SHEET 23 FOR -Y6- & -Y7- PROFILES
SEE SHEET 28 FOR -DWY1- PROFILE
REMOVE ALL DRIVE PIPES ON PROJECT UNLESS OTHERWISE NOTED

8/17/99

11/5/2025
U:\Roadway\Proj\U3609B_rdy_psh06.dgn
Aisley