Docusign Envelope ID: 16D12275-C3FB-4587-A3A9-DD2548766595

09/08/99

TIP PROJECT: HL–0033

CONTRACT: C204765

See Sheet 1A For Index of Sheets
See Sheet 1B For Conventional Symbols

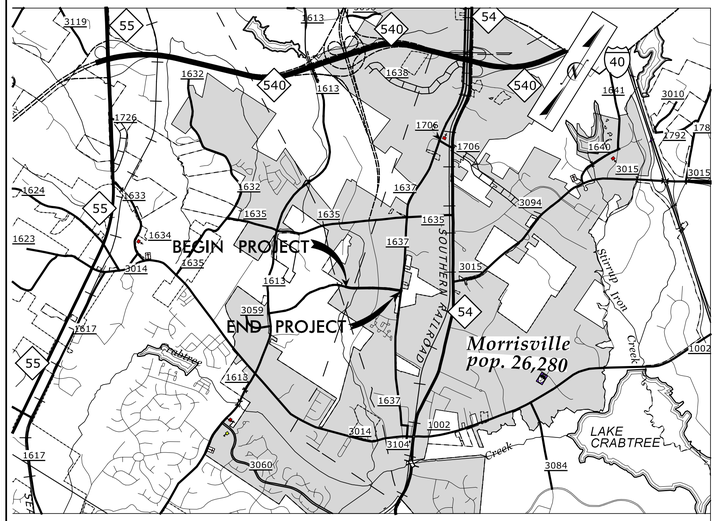

VICINITY MAP

TOWN OF MORRISVILLE

STATE OF NORTH CAROLINA
DIVISION OF HIGHWAYS

WAKE COUNTY

STATE	STATE PROJECT REFERENCE NO.	SHEET NO.	TOTAL SHEETS
N.C.	HL–0033	1	

STATE PROJ. NO.	F. A. PROJ. NO.	DESCRIPTION
49618.1.1	N/A	PE
49618.2.1	3126001	R/W
49618.2.2	N/A	UTIL
49618.3.1	3126001	CONST.

LOCATION: EXTENSION OF AIRPORT BOULEVARD (SR 3126)
FROM GARDEN SQUARE LANE TO CHURCH ST (SR 1637)
IN MORRISVILLE. CONSTRUCT ROADWAY ON NEW LOCATION.

TYPE OF WORK: GRADING, DRAINAGE, CULVERT, SIGNALS, AND PAVING

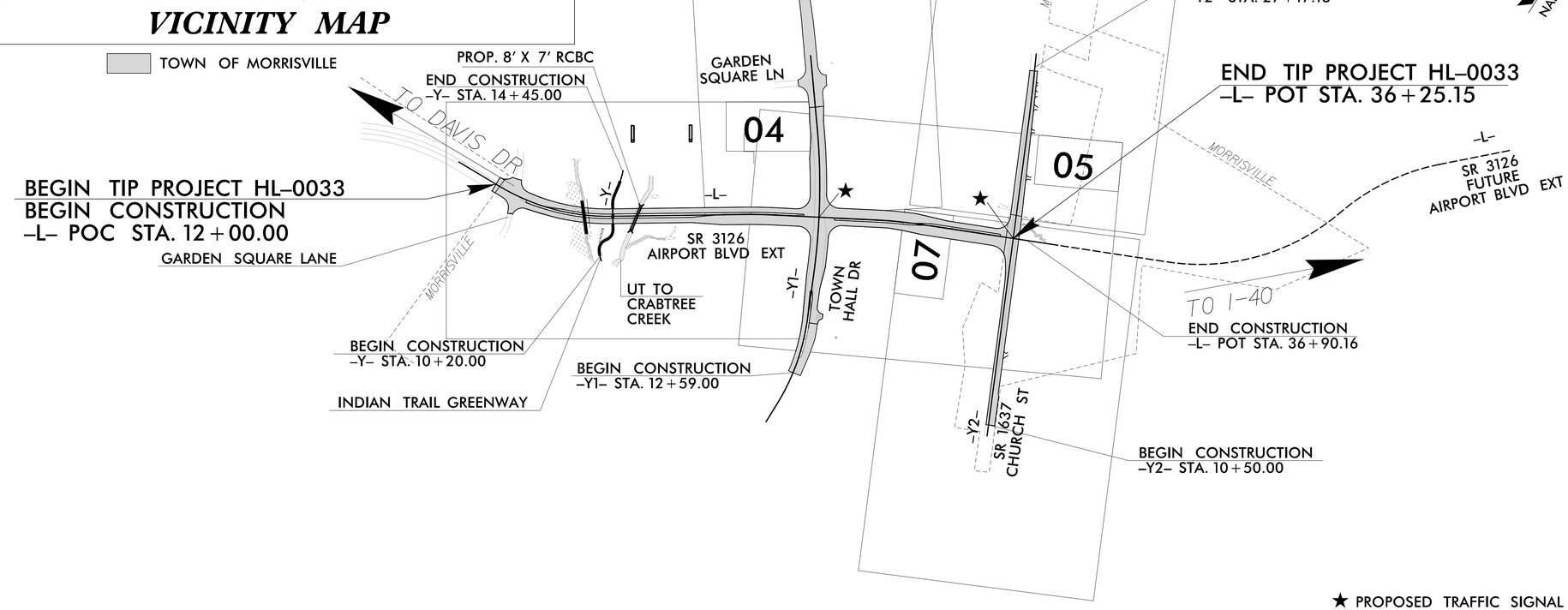

DOCUMENT NOT CONSIDERED FINAL
UNLESS ALL SIGNATURES COMPLETED

GRAPHIC SCALES

50 25 0 50 100
PLANS

50 25 0 50 100
PROFILE (HORIZONTAL)

10 5 0 10 20
PROFILE (VERTICAL)

DESIGN DATA

ADT 2026 = 6,450
ADT 2046 = 17,600
K = 11 %
D = 60 %
T = 4 % *
V = 50 MPH
* TTST =1% DUAL 3%
FUNC CLASS =
MINOR ARTERIAL
REGIONAL TIER

PROJECT LENGTH

LENGTH ROADWAY TIP PROJECT HL–0033 =0.459 Miles

TOTAL LENGTH TIP PROJECT HL–0033 =0.459 Miles

Prepared In the Office of:

Lochner
H. W. LOCHNER, INC.
2840 PLAZA PLACE, SUITE 202
RALEIGH, NC 27612
(919)571-7111
NC License Number F-0259

VHB Engineering NC, P.C. (C-3705)
940 Main Campus Drive, Suite 500
Raleigh, NC 27606

2024 STANDARD SPECIFICATIONS

RIGHT OF WAY DATE:
JANUARY 24, 2022

LETTING DATE:
FEBRUARY 17, 2026

BRIAN K. EASON, PE
PROJECT ENGINEER

CHRISTINA Y. FITZGERALD, PE
PROJECT DESIGN ENGINEER

KYRILLOS HELMY, EI
NCDOT CONTACT

HYDRAULICS ENGINEER

DocuSigned by:
Frank F. Fleming
A8D4B2F2F9F6C494
SIGNATURE: *P.E.* 12/22/2025

NORTH CAROLINA PROFESSIONAL SEAL 20147 ENGINEER FRANK F. FLEMING

ROADWAY DESIGN ENGINEER

Signed by:
Christina Fitzgerald
SIGNATURE: *P.E.* 12/22/2025

NORTH CAROLINA PROFESSIONAL SEAL 048043 ENGINEER CHRISTINA Y. FITZGERALD

STATE OF NORTH CAROLINA DEPARTMENT OF TRANSPORTATION

12/3/2025
HL-0033_RDY_TSH.dgn
caroline.perry

Docusign Envelope ID: 500E9B0C-821D-4F7C-A478-9EC33A4C9C26

Lochner
H. W. LOCHNER, INC.
2840 PLAZA PLACE, SUITE 202
RALEIGH, NC 27612
(919) 571-7111
NC License Number F-0159

PROJECT REFERENCE NO.	SHEET NO.
HL-0033	1A

ROADWAY DESIGN ENGINEER

NORTH CAROLINA PROFESSIONAL SEAL ENGINEER 048043 CHRISTINA Y. FITZGERALD
Christina Fitzgerald
12/22/2025

DOCUMENT NOT CONSIDERED FINAL UNLESS ALL SIGNATURES COMPLETED

INDEX OF SHEETS

SHEET NUMBER	SHEET
1	TITLE SHEET
1A	INDEX OF SHEETS, GENERAL NOTES, and STANDARD DRAWINGS
1B	CONVENTIONAL SYMBOLS
2A-1 thru 2A-3	PAVEMENT SCHEDULE, TYPICAL SECTIONS, and WEDGING DETAILS
2B-1 thru 2B-6	INTERSECTION DETAIL SHEETS
2C-1 thru 2C-8	ROADWAY SPECIAL DETAILS
3B-1	EARTHWORK, GUARDRAIL, and PAVEMENT REMOVAL SUMMARIES
3D-1 thru 3D-5	DRAINAGE SUMMARY
3G-1	SUBSURFACE DRAINAGE and AGGREGATE SUBGRADE/STABILIZATION SUMMARIES
3P-1	PARCEL INDEX SHEET
4 thru 8	ROADWAY PLANS
9 thru 11	ROADWAY PROFILES
RW-01 thru RW-08	SURVEY CONTROL, EXISTING CENTERLINES, RIGHT OF WAY, EASEMENT AND PROPERTY TIES
TMP-1 thru TMP-24	TRAFFIC MANAGEMENT PLANS
PMP-1 thru PMP-5	PAVEMENT MARKING PLANS
E-1 thru E-2	ELECTRICAL PLANS
EC-1 thru EC-13	EROSION CONTROL PLANS
RF-1	REFORESTATION DETAIL SHEET
SGN-1 thru SGN-6	SIGNING PLANS
SIG-1 thru SIG-4.4	SIGNAL PLANS
SIG-M1A thru SIG-M9	SIGNAL DETAILS
SCP-1 thru SCP-8A	SIGNAL COMMUNICATION PLANS
UC-1 thru UC-7	UTILITY CONSTRUCTION PLANS
UO-1 thru UO-6	UTILITIES BY OTHERS PLANS
X-1	CROSS SECTION INDEX
X-1A	CROSS SECTION SUMMARY SHEET
X-2 thru X-26	CROSS-SECTIONS
C1-1 thru C1-4	CULVERT PLANS

GENERAL NOTES:

2024 SPECIFICATIONS
EFFECTIVE: 01-16-2024
REVISED:

GRADING AND SURFACING OR RESURFACING AND WIDENING:

THE GRADE LINES SHOWN DENOTE THE FINISHED ELEVATION OF THE PROPOSED SURFACING AT GRADE POINTS SHOWN ON THE TYPICAL SECTIONS. WHERE NO GRADE LINES ARE SHOWN, THE PROFILES SHOWN DENOTE THE TOP ELEVATION OF THE EXISTING PAVEMENT ALONG THE CENTER LINE OF SURVEY ON WHICH THE PROPOSED RESURFACING WILL BE PLACED. GRADE LINES MAY BE ADJUSTED BY THE ENGINEER IN ORDER TO SECURE A PROPER TIE-IN.

CLEARING:

CLEARING ON THIS PROJECT SHALL BE PERFORMED TO THE LIMITS ESTABLISHED BY METHOD II.

SUPERELEVATION:

ALL CURVES ON THIS PROJECT SHALL BE SUPERELEVATED IN ACCORDANCE WITH STD. NO. 225.04 USING THE RATE OF SUPERELEVATION AND RUNOFF SHOWN ON THE PLANS. SUPERELEVATION IS TO BE REVOLVED ABOUT THE GRADE POINTS SHOWN ON THE TYPICAL SECTIONS.

SHOULDER CONSTRUCTION:

ASPHALT, EARTH, AND CONCRETE SHOULDER CONSTRUCTION ON THE HIGH SIDE OF SUPERELEVATED CURVES SHALL BE IN ACCORDANCE WITH STD. NO. 560.01

SIDE ROADS:

THE CONTRACTOR WILL BE REQUIRED TO DO ALL NECESSARY WORK TO PROVIDE SUITABLE CONNECTIONS WITH ALL ROADS, STREETS, AND DRIVES ENTERING THIS PROJECT. THIS WORK WILL BE PAID FOR AT THE CONTRACT UNIT PRICE FOR THE PARTICULAR ITEMS INVOLVED.

SUBSURFACE DRAINS:

SUBSURFACE DRAINS SHALL BE CONSTRUCTED IN ACCORDANCE WITH STD. NO. 815.02 AT LOCATIONS DIRECTED BY THE ENGINEER.

DRIVEWAYS:

DRIVEWAYS SHALL BE CONSTRUCTED IN ACCORDANCE WITH STD. 848.02 USING 3 FOOT RADII OR RADII AS SHOWN ON THE PLANS. LOCATIONS OF DRIVES WILL BE AS SHOWN ON THE PLANS OR AS DIRECTED BY THE ENGINEER.

STREET TURNOUT:

STREET RETURNS SHALL BE CONSTRUCTED IN ACCORDANCE WITH STD. NO. 848.04 USING THE RADII NOTED ON PLANS.

GUARDRAIL:

THE GUARDRAIL LOCATIONS SHOWN ON THE PLANS MAY BE ADJUSTED DURING CONSTRUCTION AS DIRECTED BY THE ENGINEER. THE CONTRACTOR SHOULD CONSULT WITH THE ENGINEER PRIOR TO ORDERING GUARDRAIL MATERIAL.

TEMPORARY SHORING:

SHORING REQUIRED FOR THE MAINTENANCE OF TRAFFIC WILL BE PAID FOR AS "EXTRA" WORK" IN ACCORDANCE WITH SECTION 104-7.

UTILITIES:

UTILITY OWNERS ON THIS PROJECT ARE DUKE ENERGY DISTRIBUTION.

AT&T COMMUNICATIONS: LOCAL SERVICE, AT&T COMMUNICATIONS: LONG DISTANCE

GOOGLE FIBER, SPECTRUM/CHARTER CATV, DOMINION ENERGY GAS, AND

WINDSTREAM COMMUNICATIONS

ANY RELOCATION OF EXISTING UTILITIES WILL BE ACCOMPLISHED BY OTHERS, EXCEPT AS SHOWN ON THE PLANS.

RIGHT-OF-WAY MARKERS:

ALL RIGHT-OF-WAY MARKERS ON THIS PROJECT SHALL BE PLACED BY CONTRACT.

CURB RAMPS

CURB RAMPS ARE SHOWN ON THE PLANS AT APPROXIMATE LOCATIONS. CONSTRUCT ALL CURB RAMPS ACCORDANCE WITH STD 848.06.

EFF. 01-16-2024
REV.

2024 ROADWAY ENGLISH STANDARD DRAWINGS

The following Roadway Standards as appear in "Roadway Standard Drawings" Contracts Standards and Development Unit - N. C. Department of Transportation - Raleigh, N. C., Dated January 16, 2024 are applicable to this project and by reference hereby are considered a part of these plans:

STD.NO.	TITLE
DIVISION 2 - EARTHWORK	
200.02	Method of Clearing - Method II
225.02	Guide for Grading Subgrade - Secondary and Local
225.04	Method of Obtaining Superelevation - Two Lane Pavement
DIVISION 3 - PIPE CULVERTS	
300.01	Method of Pipe Installation (Use Details in Lieu of Standards for Sheets 1 and 2 of 2)
310.10	Driveway Pipe Construction
DIVISION 5 - SUBGRADE, BASES AND SHOULDERS	
560.01	Method of Shoulder Construction - High Side of Superelevated Curve - Method I
DIVISION 6 - ASPHALT BASES AND PAVEMENTS	
654.01	Pavement Repairs
DIVISION 8 - INCIDENTALS	
806.01	Concrete Right-of-Way Marker
806.02	Granite Right-of-Way Marker
815.02	Subsurface Drain
840.00	Concrete Base Pad for Drainage Structures
840.01	Brick Catch Basin - 12" thru 54" Pipe
840.02	Concrete Catch Basin - 12" thru 54" Pipe
840.03	Frame, Grates and Hood - for Use on Standard Catch Basin
840.14	Concrete Drop Inlet - 12" thru 30" Pipe
840.15	Brick Drop Inlet - 12" thru 30" Pipe
840.16	Drop Inlet Frame and Grates - for use with Std. Dwg 840.14 and 840.15
840.25	Anchorage for Frames - Brick or Concrete or Precast
840.31	Concrete Junction Box - 12" thru 66" Pipe
840.32	Brick Junction Box - 12" thru 66" Pipe
840.54	Manhole Frame and Cover
840.66	Drainage Structure Steps
840.72	Pipe Collar
848.01	Concrete Sidewalk (Use Detail in Lieu of Standard for Sheet 1 of 1)
848.02	Driveway Turnout - Radius Type
848.04	Street Turnout
848.06	Curb Ramp (Use Details in Lieu of Standards for Sheets 9 and 10 of 13)
848.07	Concrete Sidepath / Shared Use Path / Greenway Construction
852.01	Concrete Islands
852.05	Median Curb for Catch Basin - for Use with 1'-6" Curb and Gutter
852.06	Method for Placement of Drop Inlets in Concrete Islands
852.10	Median Construction - with Curb and Gutter
862.01	Guardrail Placement (Use Details in Lieu of Standards for Sheet 12 of 15)
862.02	Guardrail Installation
867.02	Steel Bollards
876.01	Rip Rap in Channels and Ditches
876.02	Guide for Rip Rap at Pipe Outlets

9/10/2021

PROJECT REFERENCE NO.	SHEET NO.
HL-0033	1B

STATE OF NORTH CAROLINA, DIVISION OF HIGHWAYS

CONVENTIONAL PLAN SHEET SYMBOLS

Note: Not to Scale

BOUNDARIES AND PROPERTY:

- State Line
- County Line
- Township Line
- City Line
- Reservation Line
- Property Line
- Existing Iron Pin (EIP)
- Computed Property Corner
- Existing Concrete Monument (ECM)
- Parcel/Sequence Number
- Existing Fence Line
- Proposed Woven Wire Fence
- Proposed Chain Link Fence
- Proposed Barbed Wire Fence
- Existing Wetland Boundary
- Proposed Wetland Boundary
- Existing Endangered Animal Boundary
- Existing Endangered Plant Boundary
- Existing Historic Property Boundary
- Known Contamination Area: Soil
- Potential Contamination Area: Soil
- Known Contamination Area: Water
- Potential Contamination Area: Water
- Contaminated Site: Known or Potential

BUILDINGS AND OTHER CULTURE:

- Gas Pump Vent or U/G Tank Cap
- Sign
- Well
- Small Mine
- Foundation
- Area Outline
- Cemetery
- Building
- School
- Church
- Dam

HYDROLOGY:

- Stream or Body of Water
- Hydro, Pool or Reservoir
- Jurisdictional Stream
- Buffer Zone 1
- Buffer Zone 2
- Flow Arrow
- Disappearing Stream
- Spring
- Wetland
- Proposed Lateral, Tail, Head Ditch
- False Sump

RAILROADS:

- Standard Gauge
- RR Signal Milepost
- Switch
- RR Abandoned
- RR Dismantled

RIGHT OF WAY & PROJECT CONTROL:

- Primary Horiz Control Point
- Primary Horiz and Vert Control Point
- Secondary Horiz and Vert Control Point
- Vertical Benchmark
- Existing Right of Way Monument
- Proposed Right of Way Monument (Rebar and Cap)
- Proposed Right of Way Monument (Concrete)
- Existing Permanent Easement Monument
- Proposed Permanent Easement Monument (Rebar and Cap)
- Existing C/A Monument
- Proposed C/A Monument (Rebar and Cap)
- Proposed C/A Monument (Concrete)
- Existing Right of Way Line
- Proposed Right of Way Line
- Existing Control of Access Line
- Proposed Control of Access Line
- Proposed ROW and CA Line
- Existing Easement Line
- Proposed Temporary Construction Easement
- Proposed Temporary Drainage Easement
- Proposed Permanent Drainage Easement
- Proposed Permanent Drainage/Utility Easement
- Proposed Permanent Utility Easement
- Proposed Temporary Utility Easement
- Proposed Aerial Utility Easement

ROADS AND RELATED FEATURES:

- Existing Edge of Pavement
- Existing Curb
- Proposed Slope Stakes Cut
- Proposed Slope Stakes Fill
- Proposed Curb Ramp
- Existing Metal Guardrail
- Proposed Guardrail
- Existing Cable Guiderail
- Proposed Cable Guiderail
- Equality Symbol
- Pavement Removal

VEGETATION:

- Single Tree
- Single Shrub
- Hedge
- Woods Line
- Orchard
- Vineyard

EXISTING STRUCTURES:

MAJOR:

- Bridge, Tunnel or Box Culvert
- Bridge Wing Wall, Head Wall and End Wall

MINOR:

- Head and End Wall
- Pipe Culvert
- Footbridge
- Drainage Box: Catch Basin, DI or JB
- Paved Ditch Gutter
- Storm Sewer Manhole
- Storm Sewer

UTILITIES:

** SUE – Subsurface Utility Engineering*
LOS – Level of Service – A,B,C or D (Accuracy)

POWER:

- Existing Power Pole
- Proposed Power Pole
- Existing Joint Use Pole
- Proposed Joint Use Pole
- Power Manhole
- Power Line Tower
- Power Transformer
- U/G Power Cable Hand Hole
- H-Frame Pole
- U/G Power Line Test Hole (SUE – LOS A)*
- U/G Power Line (SUE – LOS B)*
- U/G Power Line (SUE – LOS C)*
- U/G Power Line (SUE – LOS D)*

TELEPHONE:

- Existing Telephone Pole
- Proposed Telephone Pole
- Telephone Manhole
- Telephone Pedestal
- Telephone Cell Tower
- U/G Telephone Cable Hand Hole
- U/G Telephone Test Hole (SUE – LOS A)*
- U/G Telephone Cable (SUE – LOS B)*
- U/G Telephone Cable (SUE – LOS C)*
- U/G Telephone Cable (SUE – LOS D)*
- U/G Telephone Conduit (SUE – LOS B)*
- U/G Telephone Conduit (SUE – LOS C)*
- U/G Telephone Conduit (SUE – LOS D)*
- U/G Fiber Optics Cable (SUE – LOS B)*
- U/G Fiber Optics Cable (SUE – LOS C)*
- U/G Fiber Optics Cable (SUE – LOS D)*

WATER:

- Water Manhole
- Water Meter
- Water Valve
- Water Hydrant
- U/G Water Line Test Hole (SUE – LOS A)*
- U/G Water Line (SUE – LOS B)*
- U/G Water Line (SUE – LOS C)*
- U/G Water Line (SUE – LOS D)*
- Above Ground Water Line

TV:

- TV Pedestal
- TV Tower
- U/G TV Cable Hand Hole
- U/G TV Test Hole (SUE – LOS A)*
- U/G TV Cable (SUE – LOS B)*
- U/G TV Cable (SUE – LOS C)*
- U/G TV Cable (SUE – LOS D)*
- U/G Fiber Optic Cable (SUE – LOS B)*
- U/G Fiber Optic Cable (SUE – LOS C)*
- U/G Fiber Optic Cable (SUE – LOS D)*

GAS:

- Gas Valve
- Gas Meter
- U/G Gas Line Test Hole (SUE – LOS A)*
- U/G Gas Line (SUE – LOS B)*
- U/G Gas Line (SUE – LOS C)*
- U/G Gas Line (SUE – LOS D)*
- Above Ground Gas Line

SANITARY SEWER:

- Sanitary Sewer Manhole
- Sanitary Sewer Cleanout
- U/G Sanitary Sewer Line
- Above Ground Sanitary Sewer
- SS Force Main Line Test Hole (SUE – LOS A)*
- SS Force Main Line (SUE – LOS B)*
- SS Force Main Line (SUE – LOS C)*
- SS Force Main Line (SUE – LOS D)*

MISCELLANEOUS:

- Utility Pole
- Utility Pole with Base
- Utility Located Object
- Utility Traffic Signal Box
- Utility Unknown U/G Line (SUE – LOS B)*
- U/G Tank; Water, Gas, Oil
- Underground Storage Tank, Approx. Loc.
- A/G Tank; Water, Gas, Oil
- Geoenvironmental Boring
- Abandoned According to Utility Records — AATUR
- End of Information — E.O.I.

Docusign Envelope ID: DCC0E5A6-7F64-4C6E-ADD2-108FEAEBA881

5/14/99

PAVEMENT SCHEDULE (FINAL PAVEMENT DESIGN)

C1	PROP. APPROX. 1 1/2"" ASPHALT CONCRETE SURFACE COURSE, TYPE S9.5B, AT AN AVERAGE RATE OF 165 LBS. PER SQ. YD.	E2	PROP. VAR. DEPTH ASPHALT CONCRETE BASE COURSE, TYPE B25.0C, AT AN AVERAGE RATE OF 114 LBS PER SQ YD PER 1" DEPTH TO BE PLACED IN LAYERS NOT LESS THAN 3" IN DEPTH OR GREATER THAN 5 1/2" IN DEPTH.	S3	10' MULTI-USE PATH (4" CONCRETE WITH WELDED WIRE MESH).
C2	PROP. APPROX. 3" ASPHALT CONCRETE SURFACE COURSE, TYPE S9.5B, AT AN AVERAGE RATE OF 165 LBS. PER SQ. YD. IN EACH OF THE TWO LAYERS.	J1	PROP. 6" AGGREGATE BASE COURSE.	T	EARTH MATERIAL.
C3	PROP. VAR. DEPTH ASPHALT CONCRETE SURFACE COURSE, TYPE S9.5B, AT AN AVERAGE RATE OF 110 LBS PER SQ YD PER 1" DEPTH TO BE PLACED IN LAYERS NOT TO EXCEED 1 1/2" IN DEPTH.	R1	1'-6" CONCRETE CURB AND GUTTER.	U	EXISTING PAVEMENT.
D1	PROP. APPROX. 4" ASPHALT CONCRETE INTERMEDIATE COURSE, TYPE I19.0C, AT AN AVERAGE RATE OF 456 LBS. PER SQ. YD.	R2	2'-6" CONCRETE CURB AND GUTTER.	V1	MILLING (1.5" DEPTH).
D2	PROP. VAR. DEPTH ASPHALT CONCRETE INTERMEDIATE COURSE, TYPE I19.0C, AT AN AVERAGE RATE OF 114 LBS PER SQ YD PER 1" DEPTH TO BE PLACED IN LAYERS NOT LESS THAN 2 1/2" IN DEPTH OR GREATER THAN 4" IN DEPTH.	S1	4" CONCRETE SIDEWALK.	V2	INCIDENTAL MILLING (VARIABLE DEPTH).
E1	PROP. APPROX. 4" ASPHALT CONCRETE BASE COURSE, TYPE B25.0C, AT AN AVERAGE RATE OF 456 LBS. PER SQ. YD.	S2	5" MONOLITHIC CONCRETE ISLAND, KEYED IN.	W	VARIABLE DEPTH ASPHALT PAVEMENT (SEE WEDGING DETAIL W).

NOTE: PAVEMENT EDGE SLOPES ARE 1:1 UNLESS SHOWN OTHERWISE

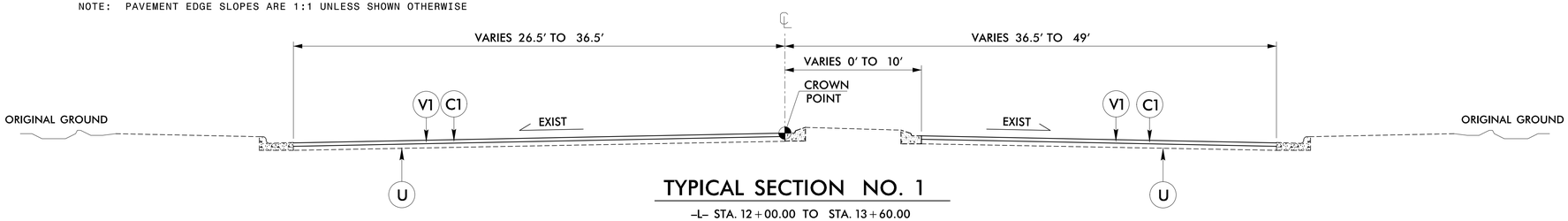

TYPICAL SECTION NO. 1

-L- STA. 12+00.00 TO STA. 13+60.00

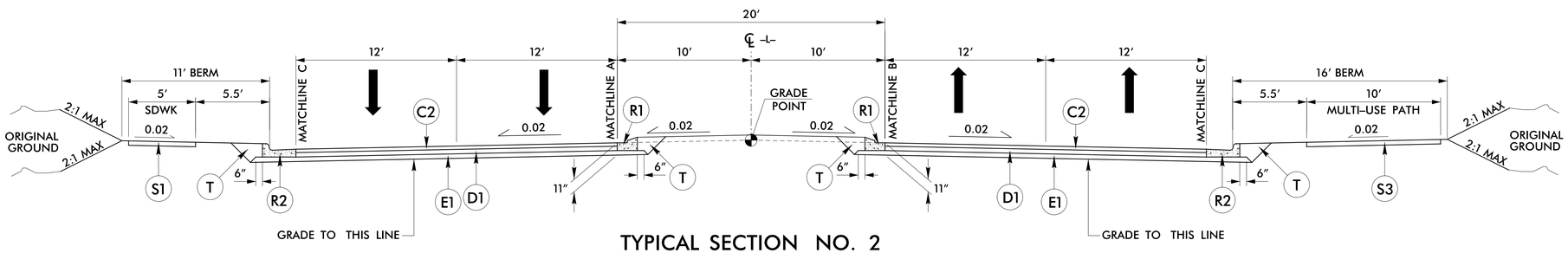

TYPICAL SECTION NO. 2

-L- STA. 13+60.00 TO STA. 35+99.14

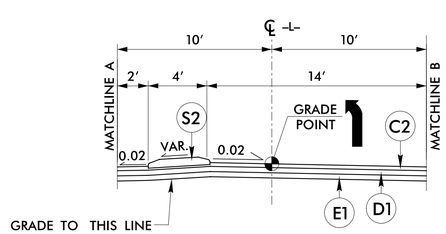

TYPICAL SECTION NO. 2A

USE WITH TYPICAL SECTION NO. 2

-L- STA. 22+80.00 TO STA. 26+61.70
-L- STA. 32+40.00 TO STA. 35+60.95

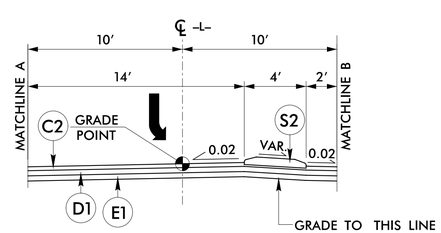

TYPICAL SECTION NO. 2B

USE WITH TYPICAL SECTION NO. 2

-L- STA. 27+78.42 TO STA. 31+40.00

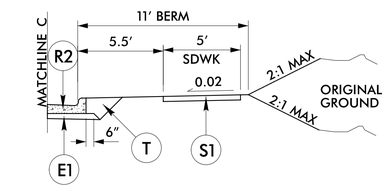

DETAIL A

USE WITH TYPICAL SECTION 2

-L- STA. 13+75.00 TO STA. 15+75.00 (RT)

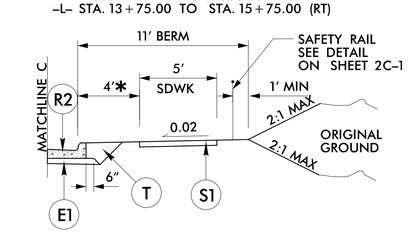

DETAIL B

USE WITH TYPICAL SECTION 2

-L- STA. 15+75.00 (RT) TO STA. 17+15.00 (RT)
(MIRRORED) -L- STA. 18+75.00 (LT) TO STA. 19+25.00 (LT)

* OR AS DIRECTED BY ENGINEER

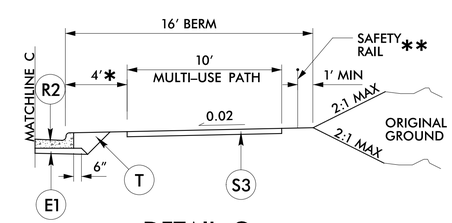

DETAIL C

USE WITH TYPICAL SECTION 2

-L- STA. 17+15.00 (RT) TO STA. 18+75.00 (RT)

* OR AS DIRECTED BY ENGINEER
** SEE DETAIL ON SHEET 2C-1 FOR HANDRAIL LOCATIONS

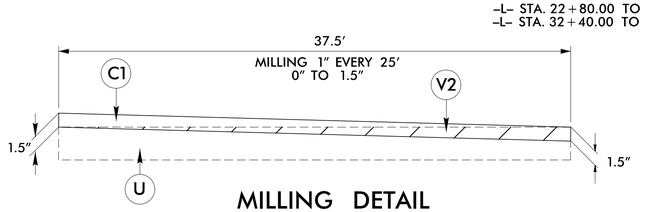

MILLING DETAIL

USE MILLING DETAIL AT RESURFACING TIES

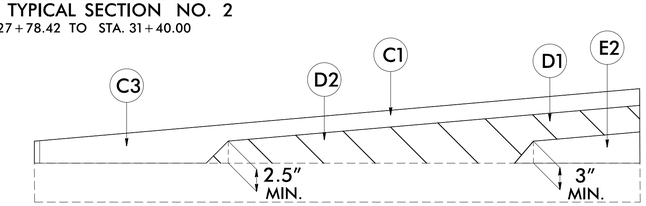

W: WEDGING DETAIL FOR RESURFACING

PROJECT REFERENCE NO.	SHEET NO.
HL-0033	2A-1
R/W SHEET NO.	

ROADWAY DESIGN ENGINEER
NORTH CAROLINA PROFESSIONAL ENGINEER SEAL 048043 CHRISTINA Y. FITTGERALD
Signed by: Christina Fittgerald
12/22/2025

PAVEMENT DESIGN ENGINEER
NORTH CAROLINA PROFESSIONAL ENGINEER SEAL 36283 SCOTT HUNSBERGER
Signed by: W. Scott Hunsberger
12/23/2025

DOCUMENT NOT CONSIDERED FINAL UNLESS ALL SIGNATURES COMPLETED

Lochner
H. W. LOCHNER, INC.
2840 PLAZA PLACE, SUITE 202
RALEIGH, NC 27612
(919) 571-7111
NC License Number F-0159

FALCON ENGINEERING
FALCON ENGINEERING, INC.
1210 TRINITY ROAD, SUITE 110
CARY, NC 27513
PHONE: 919.871.0800
www.falconengineers.com
NC License Number C-3193

12/1/2025
HL0033_RDY_TYP.dgn

Docusign Envelope ID: DCC0E5A6-7F64-4C6E-ADD2-108FEAEBA881

5/14/99

C1	1.5″ S9.5B
C2	3″ S9.5B
C3	VAR. S9.5B
D1	4″ I19.5C
D2	VAR. I19.0C
E1	4″ B25.0C
E2	VAR. B25.0C
J1	6″ ABC
R1	1′-6″ CURB
R2	2′-6″ CURB
S1	4″ SIDEWALK
S2	5″ MONO. ISLAND KEYED IN
S3	10′ MULTI-USE PATH
T	EARTH MATERIAL
U	EXISTING PAV.
V1	1.5″ MILLING
W	WEDGING

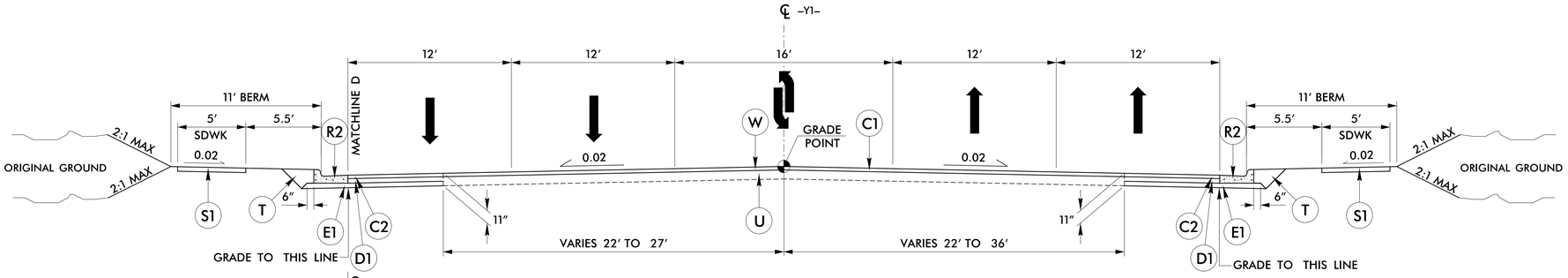

TYPICAL SECTION NO. 3

-Y1- STA. 15+00.00 TO STA. 25+00.00

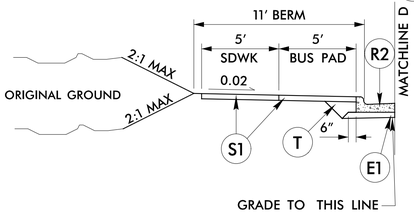

DETAIL D

USE WITH TYPICAL SECTION 3
-Y1- STA. 24+10.00 TO STA. 24+30.00 (LT)

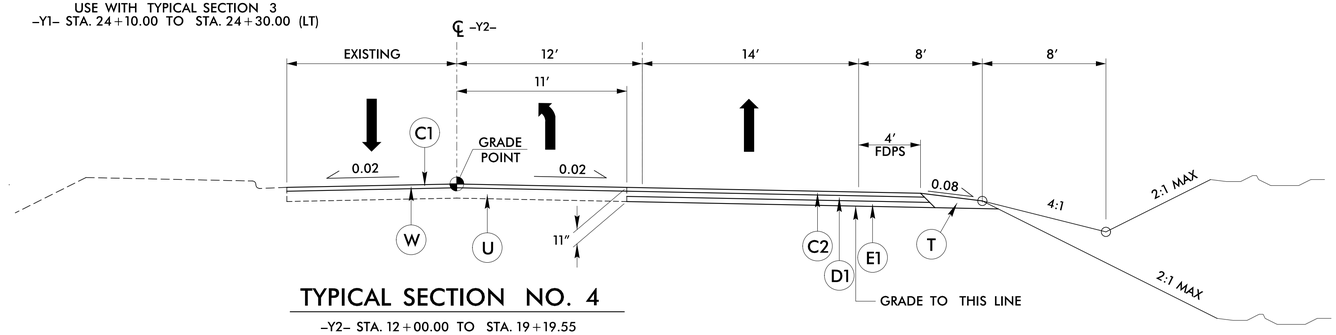

TYPICAL SECTION NO. 4

-Y2- STA. 12+00.00 TO STA. 19+19.55

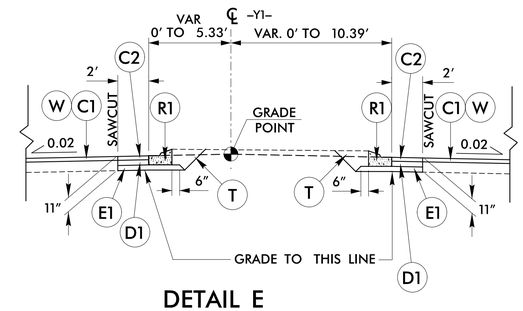

DETAIL E

USE WITH TYPICAL SECTION 3 AND 6
-Y1- STA. 14+75.00 TO 16+49.06

** FROM 14+75.00 TO 15+00.00:
MATCH EXISTING ROADWAY SLOPE. SURFACE COURSE AND WEDGING IS NOT NEEDED BEYOND THE SAWCUT LINE.

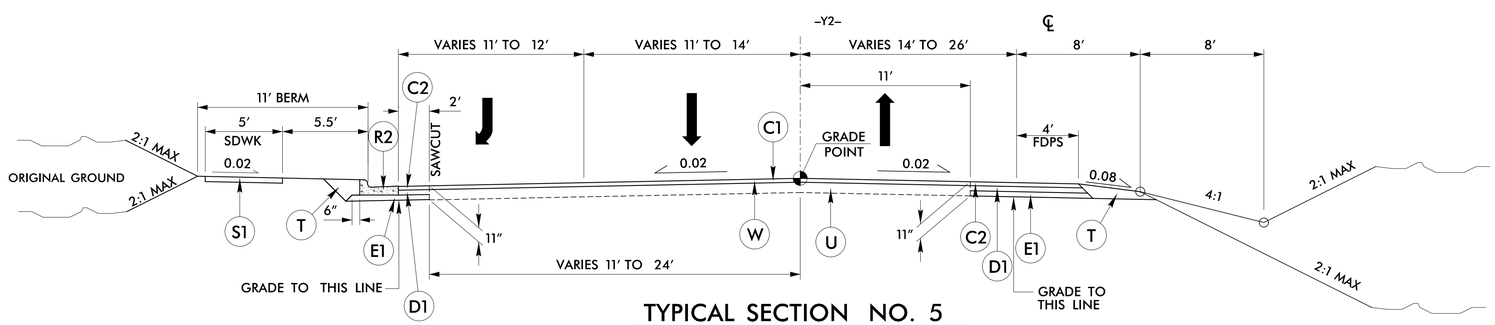

TYPICAL SECTION NO. 5

-Y2- STA. 19+19.55 TO STA. 27+00.00

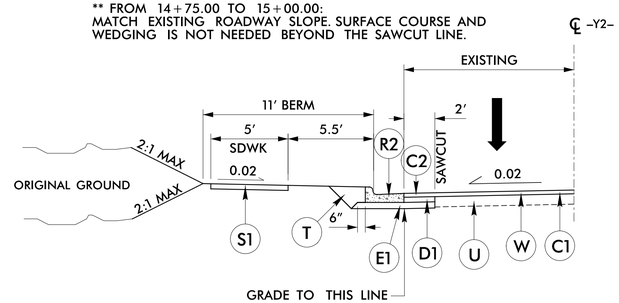

DETAIL F

USE WITH TYPICAL SECTION 4
-Y2- STA. 15+25.00 TO STA. 19+19.55

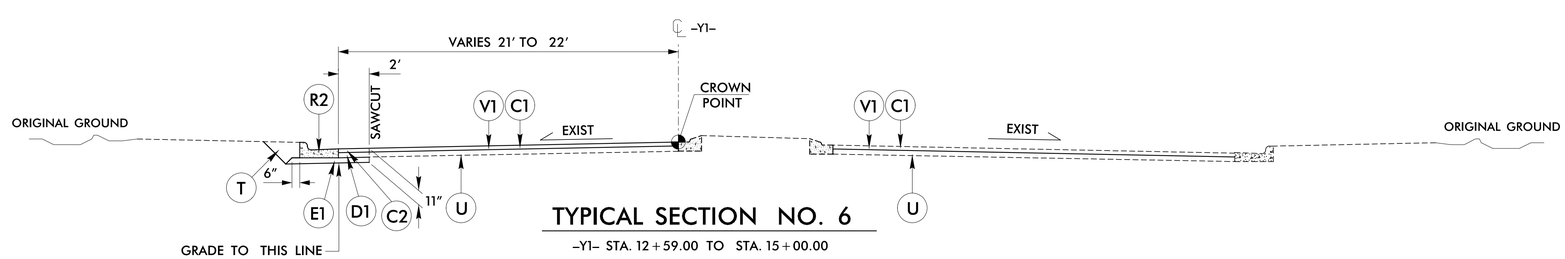

TYPICAL SECTION NO. 6

-Y1- STA. 12+59.00 TO STA. 15+00.00

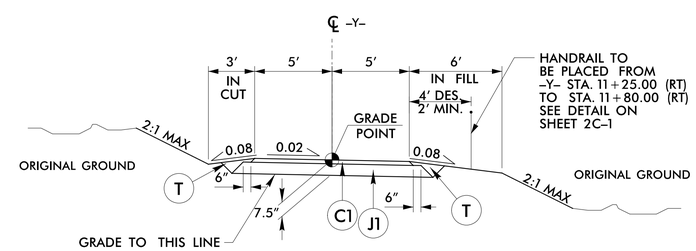

TYPICAL SECTION NO. 7

-Y- (GREENWAY) STA. 10+25.00 TO STA. 11+96.40
-Y- (GREENWAY) STA. 12+69.40 TO STA. 14+00.00

PROJECT REFERENCE NO.	SHEET NO.
HL-0033	2A-2
R/W SHEET NO.	

ROADWAY DESIGN ENGINEER
Signed by: Christina Fitzgerald
DocuSigned by: 12/22/2025
NORTH CAROLINA PROFESSIONAL SEAL 048043 ENGINEER CHRISTINA V. FITZGERALD
12/22/2025

PAVEMENT DESIGN ENGINEER
Signature: Scott Hunsberger
DocuSigned by: 12/23/2025
NORTH CAROLINA PROFESSIONAL SEAL 36283 ENGINEER SCOTT HUNSBERGER
12/23/2025

DOCUMENT NOT CONSIDERED FINAL UNLESS ALL SIGNATURES COMPLETED

Lochner
H. W. LOCHNER, INC.
2840 PLAZA PLACE, SUITE 202
RALEIGH, NC 27612
(919) 571-7111
NC License Number F-0159

FALCON ENGINEERING
FALCON ENGINEERING, INC.
1210 TRINITY ROAD, SUITE 110
CARY, NC 27513
PHONE: 919.871.0800
www.falconengineers.com
NC License Number C-3193

Docusign Envelope ID: DCC0E5A6-7F64-4C6E-ADD2-108FEAEBA881

C1	1.5″ S9.5B
C2	3″ S9.5B
D1	4″ I19.5C
E1	4″ B25.0C
U	EXISTING PAV.
V1	1.5″ MILLING

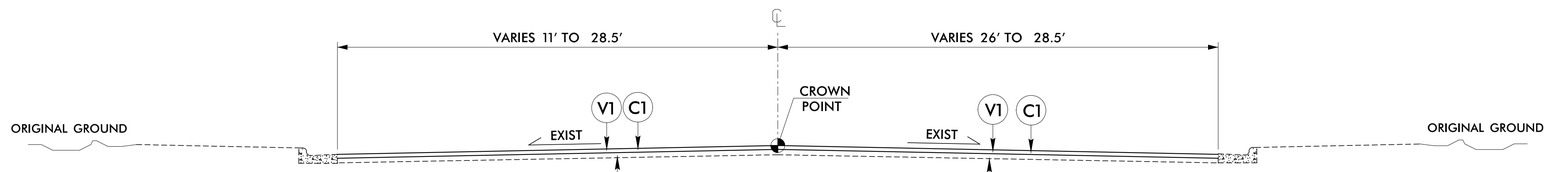

TYPICAL SECTION NO. 8

–Y1– STA. 25+00.00 TO APPROXIMATELY 780′ NORTH OF STA. 25+00.00
–Y2– STA. 10+50.00 TO STA. 12+00.00

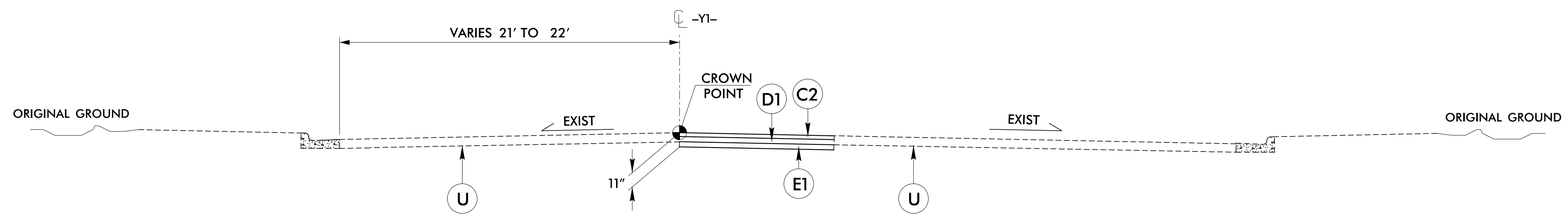

TYPICAL SECTION NO. 9

–Y1– STA. 14+76.04 TO STA. 16+49.06 MED.
TEMPORARY PAVEMENT. SEE TMP PLANS
FOR ADDITIONAL INFORMATION.

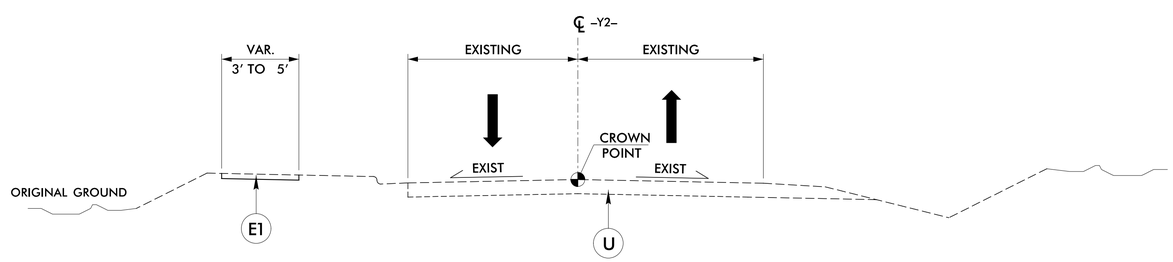

TYPICAL SECTION NO. 10

–Y2– STA. 15+61.62 TO STA. 17+76.53
–Y2– STA. 24+98.97 TO STA. 26+13.33
TEMPORARY SIDEWALK.

PROJECT REFERENCE NO.	SHEET NO.
HL-0033	2A-3
R/W SHEET NO.	

ROADWAY DESIGN ENGINEER
Signed by: Christina Fitzgerald
Docusigned by: 048043
12/22/2025

PAVEMENT DESIGN ENGINEER
Signed by: SEAL
Docusigned by: 36280
12/23/2025

DOCUMENT NOT CONSIDERED FINAL UNLESS ALL SIGNATURES COMPLETED

Lochner
H. W. LOCHNER, INC.
2840 PLAZA PLACE, SUITE 202
RALEIGH, NC 27612
(919) 571-7111
NC License Number F-0159

FALCON ENGINEERING
FALCON ENGINEERING, INC.
1210 TRINITY ROAD, SUITE 110
CARY, NC 27513
PHONE: 919.871.0800
www.falconengineers.com
NC License Number C-3193

Docusign Envelope ID: 500E9B0C-821D-4F7C-A478-9EC33A4C9C26

5/14/99

INTERSECTION DETAIL

Lochner
H. W. LOCHNER, INC.
2840 PLAZA PLACE, SUITE 202
RALEIGH, NC 27612
(919) 571-7111
NC License Number F-0159

PROJECT REFERENCE NO.	SHEET NO.
HL-0033	2B-1
R/W SHEET NO.	

ROADWAY DESIGN ENGINEER

NORTH CAROLINA PROFESSIONAL SEAL 048043 ENGINEER CHRISTINA Y. FITZGERALD
Christina Y. Fitzgerald
12/22/2025

DOCUMENT NOT CONSIDERED FINAL UNLESS ALL SIGNATURES COMPLETED

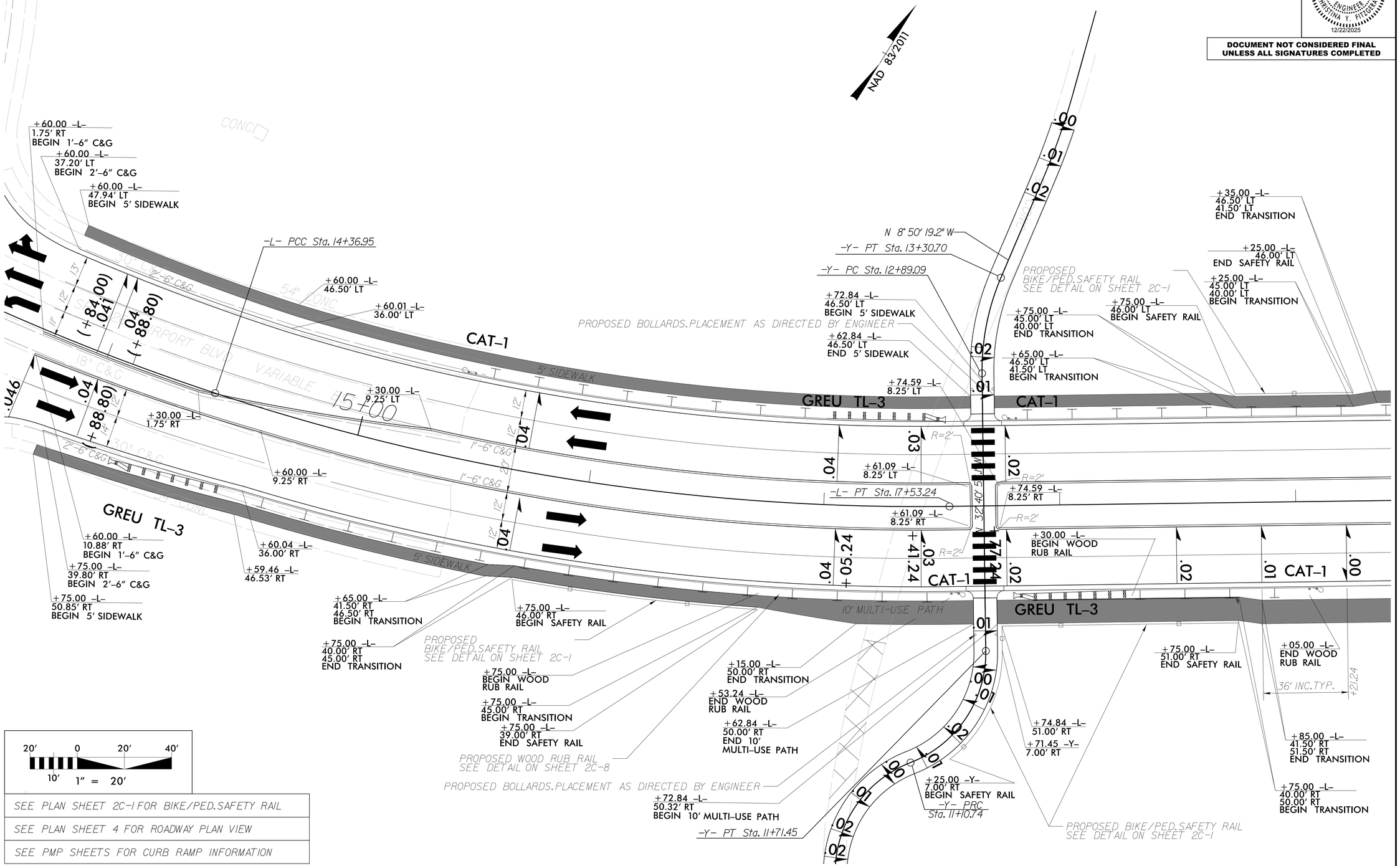

20' 0 20' 40'
10' 1" = 20'

SEE PLAN SHEET 2C-1 FOR BIKE/PED.SAFETY RAIL
SEE PLAN SHEET 4 FOR ROADWAY PLAN VIEW
SEE PMP SHEETS FOR CURB RAMP INFORMATION

12/3/2025
HL-0033_RDY_PSH_02B-1.dgn

Docusign Envelope ID: 500E9B0C-821D-4F7C-A478-9EC33A4C9C26

5/14/99

PROJECT REFERENCE NO.	SHEET NO.
HL-0033	2B-2
R/W SHEET NO.	

ROADWAY DESIGN ENGINEER

NORTH CAROLINA PROFESSIONAL SEAL 048043 ENGINEER CHRISTINA Y. FITZGERALD

Christina Y. Fitzgerald
12/22/2025

DOCUMENT NOT CONSIDERED FINAL UNLESS ALL SIGNATURES COMPLETED

Lochner
H. W. LOCHNER, INC.
2840 PLAZA PLACE, SUITE 202
RALEIGH, NC 27612
(919) 571-7111
NC License Number F-0159

INTERSECTION DETAIL

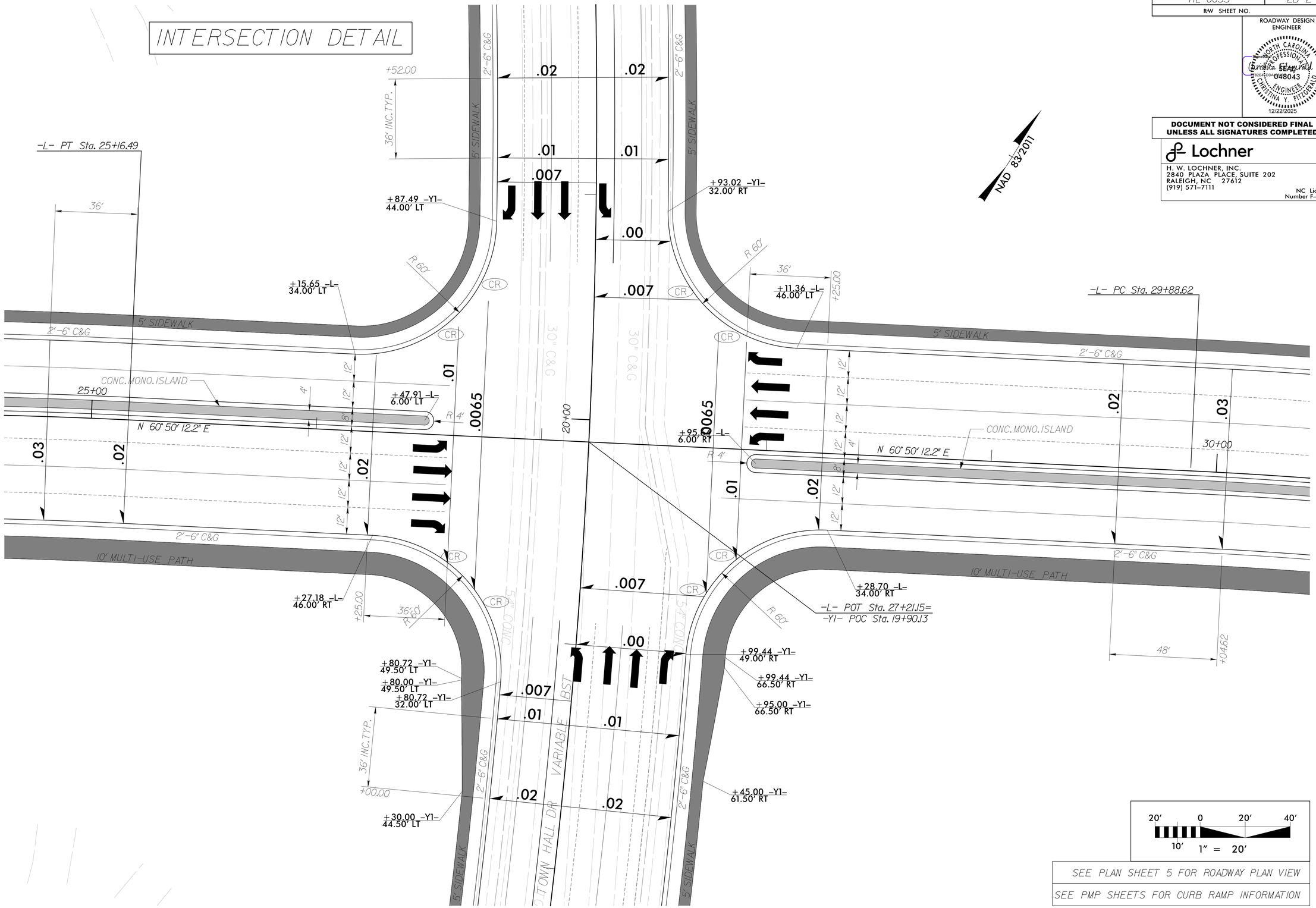

SEE PLAN SHEET 5 FOR ROADWAY PLAN VIEW

SEE PMP SHEETS FOR CURB RAMP INFORMATION

12/1/2025
HL-0033_RDY_PSH_02B-2.dgn

Docusign Envelope ID: 500E9B0C-821D-4F7C-A478-9EC33A4C9C26

5/14/99

PROJECT REFERENCE NO.	SHEET NO.
HL-0033	2B-3
R/W SHEET NO.	

ROADWAY DESIGN ENGINEER

NORTH CAROLINA PROFESSIONAL SEAL 048043 ENGINEER CHRISTINA Y. FITZGERALD

DocuSign Envelope ID: 500E9B0C-821D-4F7C-A478-9EC33A4C9C26

12/22/2025

DOCUMENT NOT CONSIDERED FINAL UNLESS ALL SIGNATURES COMPLETED

Lochner

H. W. LOCHNER, INC.
2840 PLAZA PLACE, SUITE 202
RALEIGH, NC 27612
(919) 571-7111

NC License Number F-0159

INTERSECTION DETAIL

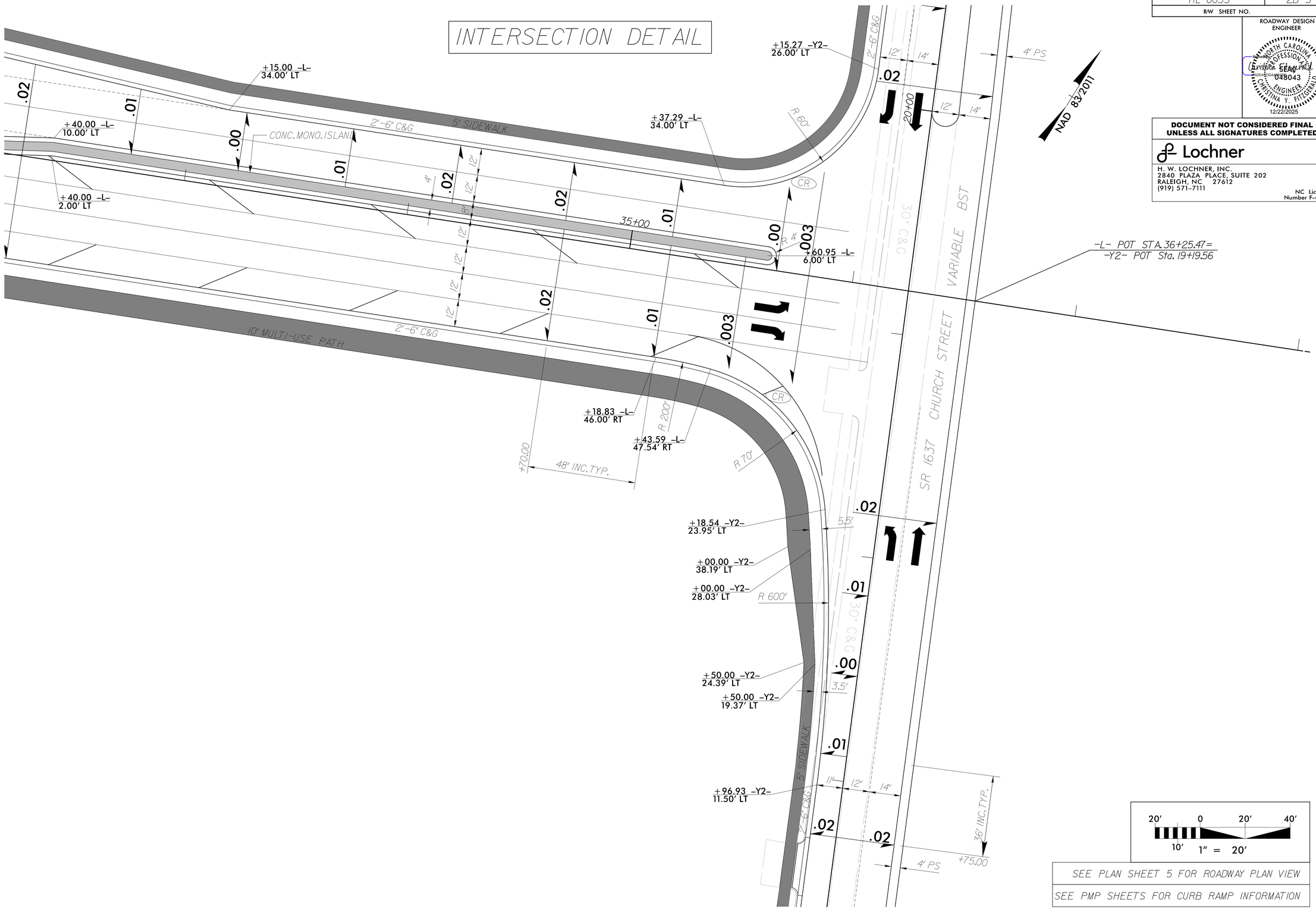

20' 0 20' 40'
10' 1" = 20'

SEE PLAN SHEET 5 FOR ROADWAY PLAN VIEW

SEE PMP SHEETS FOR CURB RAMP INFORMATION

12/1/2025
HL-0033_RDY_PSH_02B-3.dgn

Docusign Envelope ID: 500E9B0C-821D-4F7C-A478-9EC33A4C9C26

5/14/99

INTERSECTION DETAIL

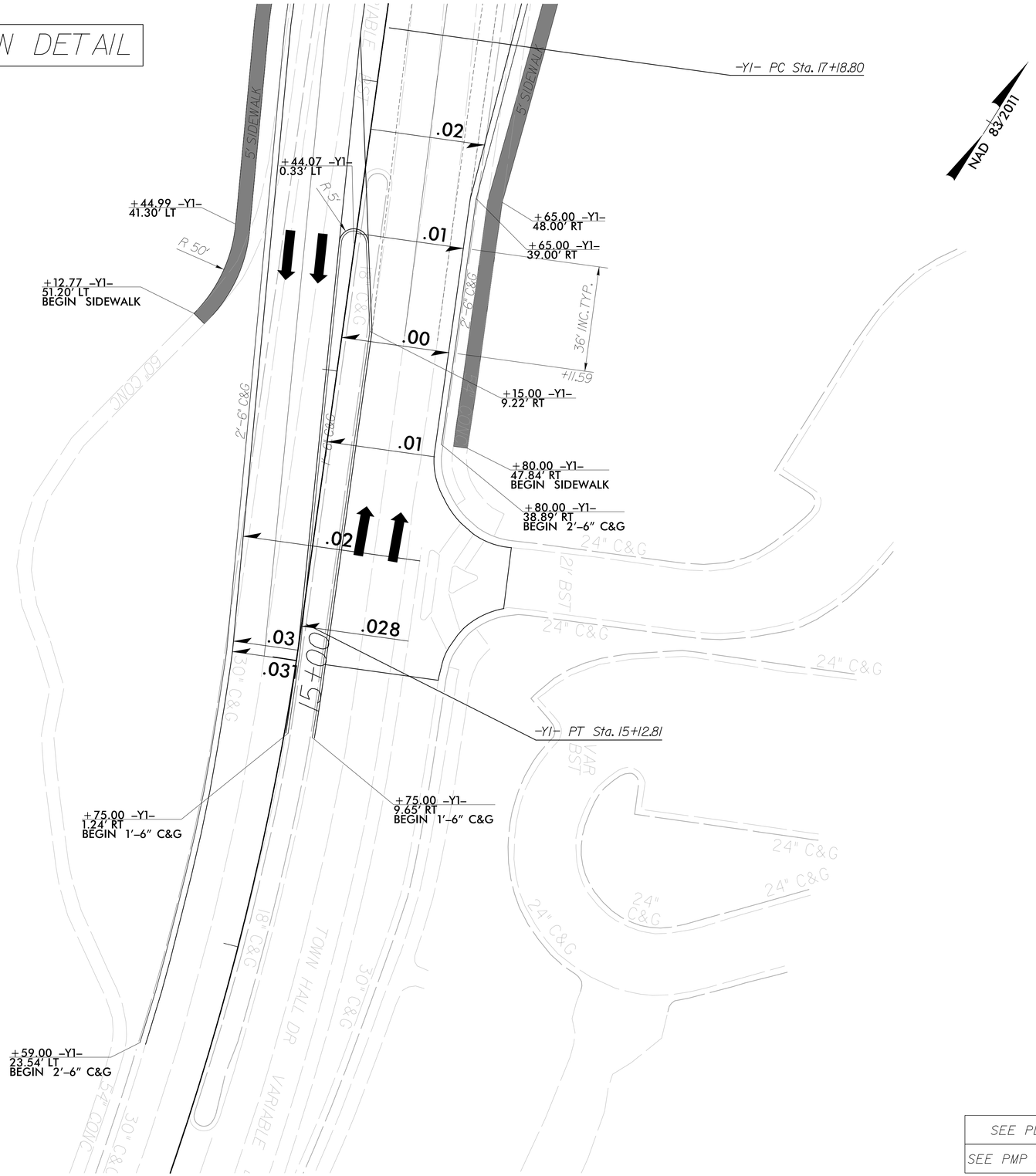

PROJECT REFERENCE NO.	SHEET NO.
HL-0033	2B-4
R/W SHEET NO.	

ROADWAY DESIGN ENGINEER

NORTH CAROLINA PROFESSIONAL ENGINEER SEAL 048043 CHRISTINA Y. FITZGERALD

Christina Y. Fitzgerald

12/22/2025

DOCUMENT NOT CONSIDERED FINAL UNLESS ALL SIGNATURES COMPLETED

Lochner

H. W. LOCHNER, INC.
2840 PLAZA PLACE, SUITE 202
RALEIGH, NC 27612
(919) 571-7111

NC License Number F-0159

20' 0 20' 40'
10' 1" = 20'

SEE PLAN SHEET 5 FOR ROADWAY PLAN VIEW

SEE PMP SHEETS FOR CURB RAMP INFORMATION

12/1/2025
HL-0033_RDY_PSH_02B-4.dgn
(no plot date)

Docusign Envelope ID: 500E9B0C-821D-4F7C-A478-9EC33A4C9C26

5/14/99

INTERSECTION DETAIL

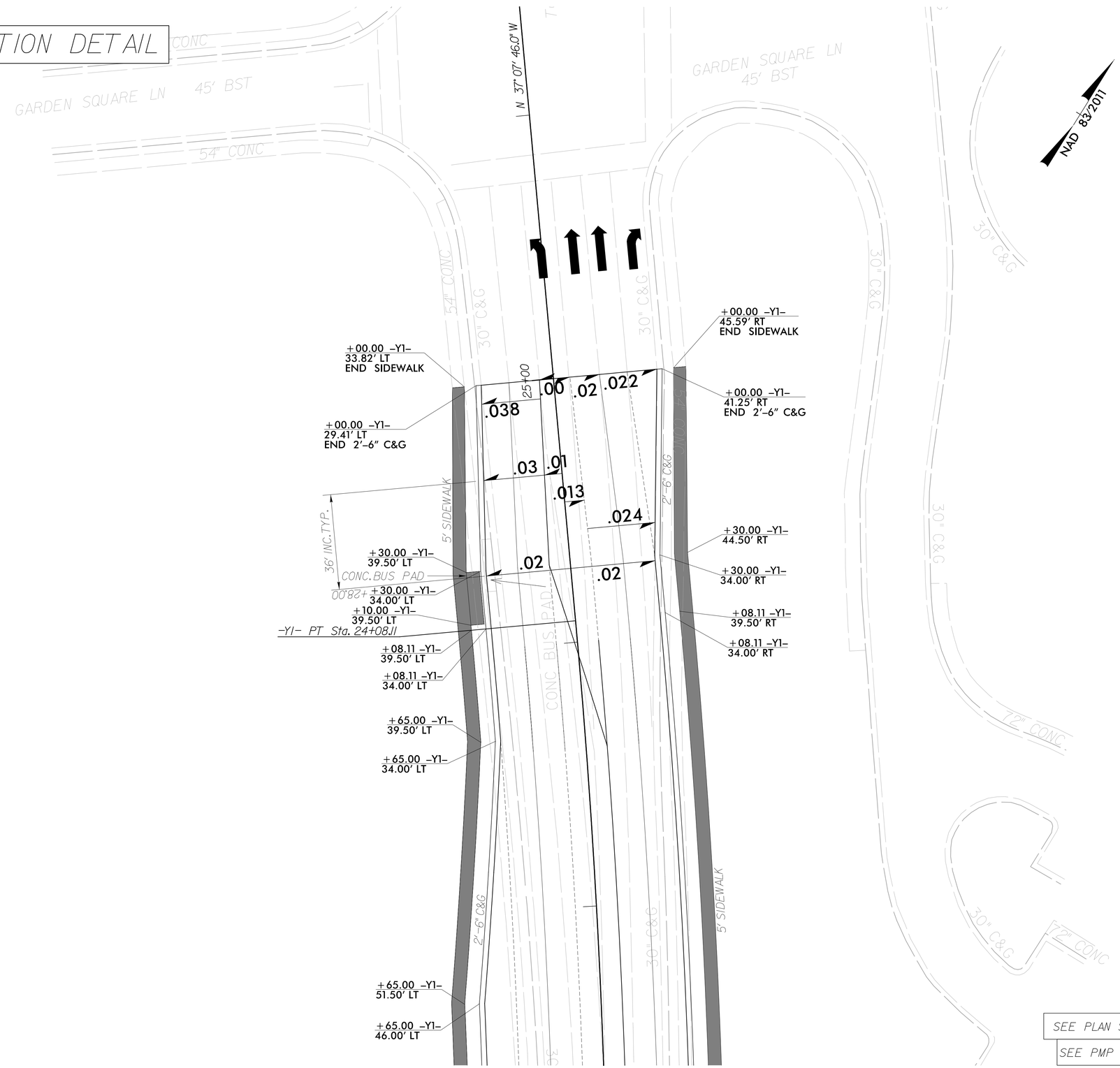

SEE PLAN SHEET 5 & 6 FOR ROADWAY PLAN VIEW

SEE PMP SHEETS FOR CURB RAMP INFORMATION

PROJECT REFERENCE NO.	SHEET NO.
HL-0033	2B-5
R/W SHEET NO.	

ROADWAY DESIGN ENGINEER

NORTH CAROLINA PROFESSIONAL ENGINEER SEAL 048043 CHRISTINA Y. FITZGERALD

Christina Y. Fitzgerald

12/22/2025

DOCUMENT NOT CONSIDERED FINAL UNLESS ALL SIGNATURES COMPLETED

Lochner

H. W. LOCHNER, INC.
2840 PLAZA PLACE, SUITE 202
RALEIGH, NC 27612
(919) 571-7111

NC License Number F-0159

12/1/2025
HL-0033_RDY_PSH_02B-5.dgn

Docusign Envelope ID: 500E9B0C-821D-4F7C-A478-9EC33A4C9C26

PROJECT REFERENCE NO.	SHEET NO.
HL-0033	2B-6
R/W SHEET NO.	

ROADWAY DESIGN ENGINEER

NORTH CAROLINA PROFESSIONAL SEAL 029473 ENGINEER JASON M. TAILLEY

Signed by: Jason Tailley
5D2AB1DAB3F14B...
12/22/2025

DOCUMENT NOT CONSIDERED FINAL UNLESS ALL SIGNATURES COMPLETED

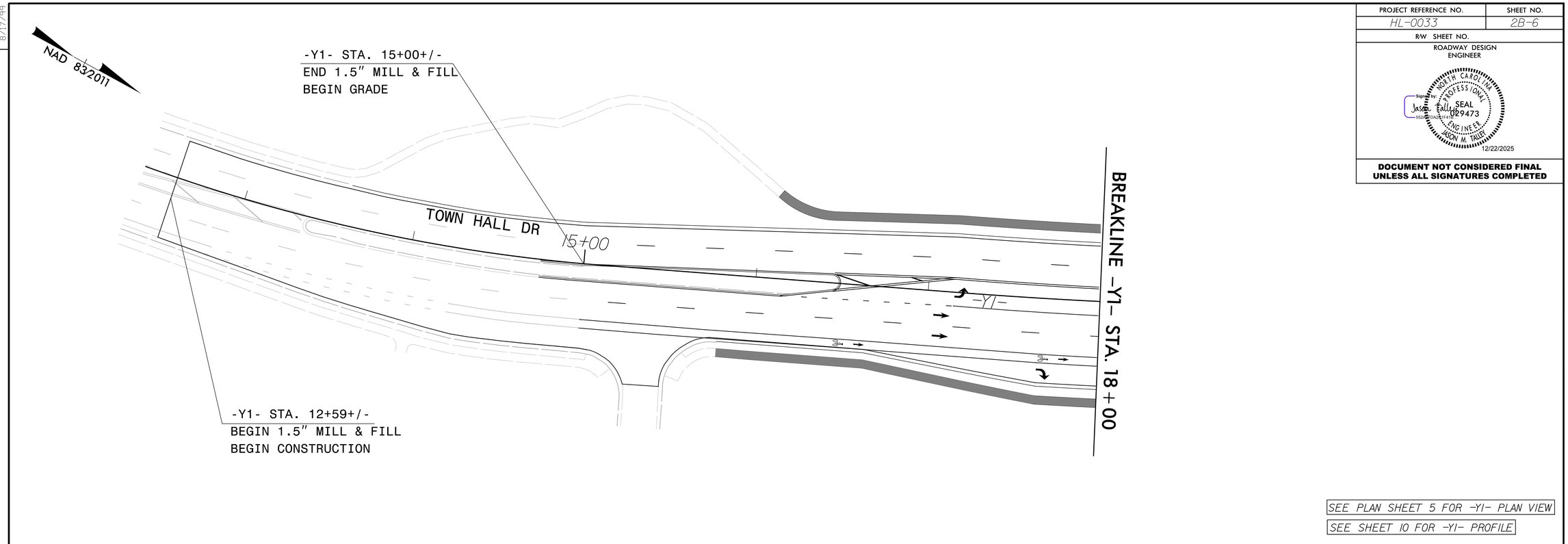

SEE PLAN SHEET 5 FOR -Y1- PLAN VIEW

SEE SHEET 10 FOR -Y1- PROFILE

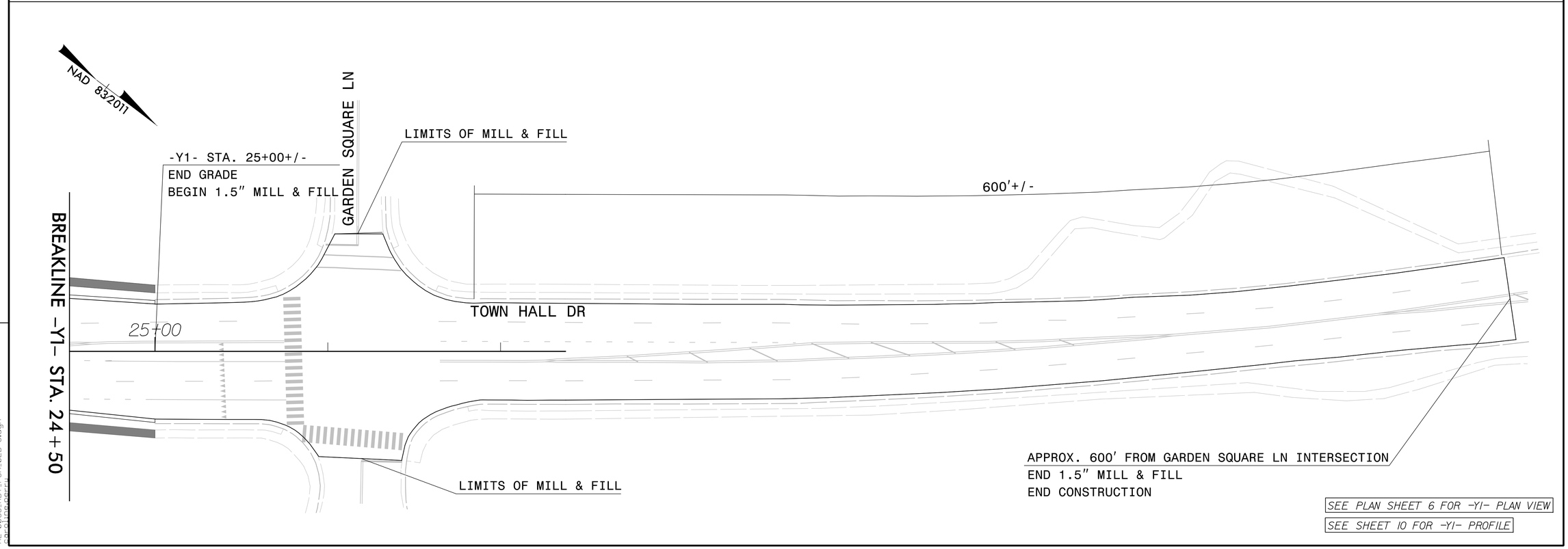

SEE PLAN SHEET 6 FOR -Y1- PLAN VIEW

SEE SHEET 10 FOR -Y1- PROFILE

REVISIONS

8/17/99

12/1/2025
HL-0033_RDY_PSH_02B-6.dgn

Docusign Envelope ID: D3D6B7DA-CC53-4063-A14A-8FB543504FCD

PROJECT REFERENCE NO.	SHEET NO.
HL-0033	2C-1

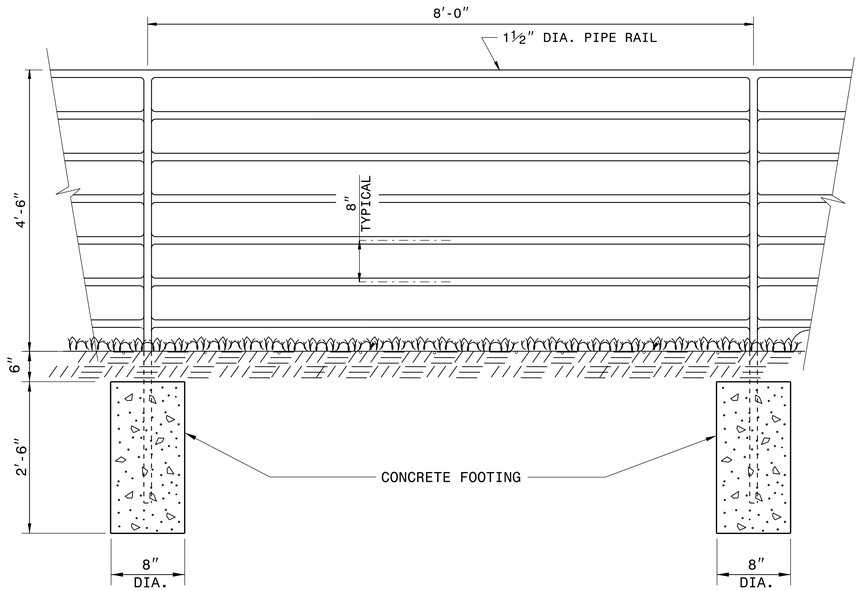

ELEVATION

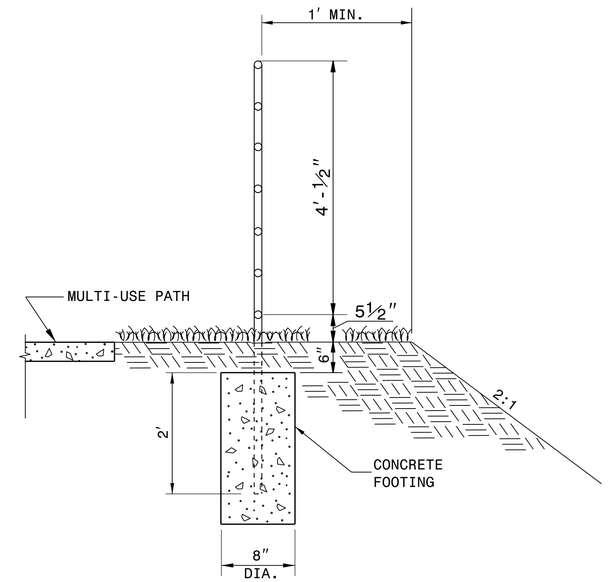

SECTION VIEW

NOTES:

CONSTRUCT PROPOSED STEEL PIPE RAIL OF 1½" DIAMETER SCHEDULE 40 PLAIN END GALVANIZED STEEL PIPE MEETING THE REQUIREMENTS OF ASTM A53.

REPAIR GALVANIZING IN ACCORDANCE WITH THE STANDARD SPECIFICATIONS SECTION 1076.

PAINT, IF REQUIRED BY THE ENGINEER, IN ACCORDANCE WITH THE STANDARD SPECIFICATIONS SECTION 1080.

WELD IN ACCORDANCE WITH ARTICLE 1072-18 OF THE STANDARD SPECIFICATIONS.

USE CLASS 'B' CONCRETE FOR HANDRAIL FOOTINGS.

PLACEMENT OF HANDRAIL IN RELATION TO SHOULDER BREAK POINT AND PATH MAY BE MODIFIED AS DIRECTED BY THE ENGINEER.

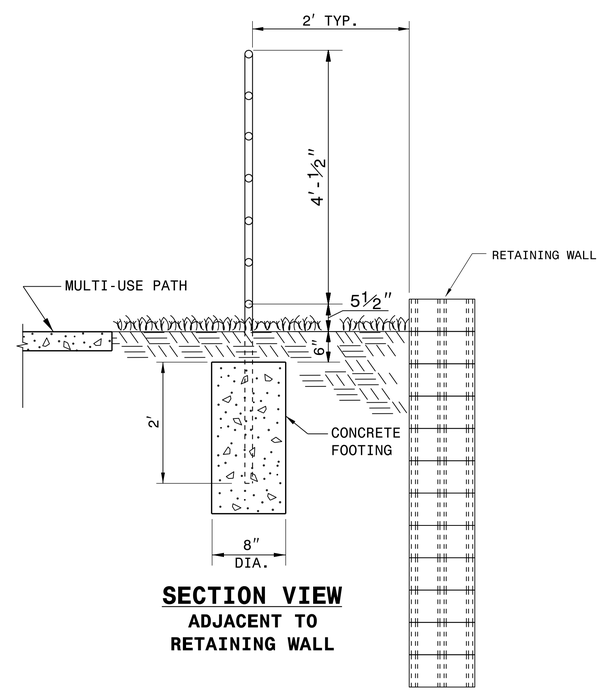

SECTION VIEW
ADJACENT TO RETAINING WALL

DOCUMENT NOT CONSIDERED FINAL UNLESS ALL SIGNATURES COMPLETED

CONTRACT STANDARDS AND DEVELOPMENT UNIT
Office 919-707-6950 FAX 919-250-4119

BICYCLE / PEDESTRIAN SAFETY RAIL

ORIGINAL BY: _____ DATE: _____
MODIFIED BY: K.A. KEMPF DATE: 7-20-23
CHECKED BY: _____ DATE: _____
FILE SPEC.: details\kkempf\english\safety rails 2024.dgn

20-JUL-2023 12:36
safety rails 2024.dgn
kkempf AT CSU-320967

Docusign Envelope ID: D3D6B7DA-CC53-4063-A14A-8FB543504FCD

PROJECT REFERENCE NO.	SHEET NO.
HL-0033	2C-2

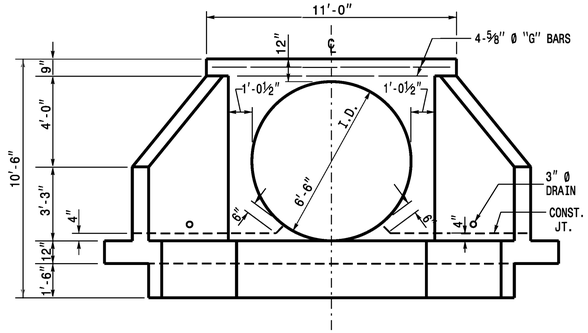

END ELEVATION

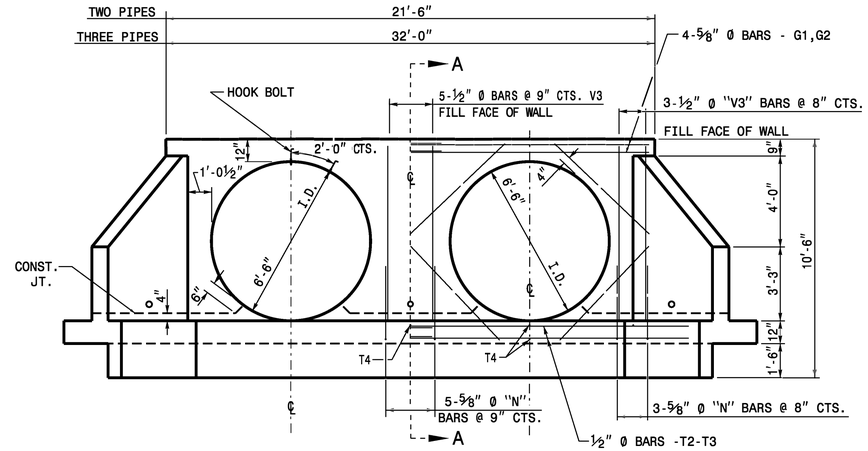

END ELEVATION

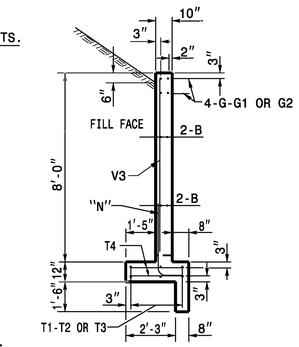

SECTION A-A FOR ALL ENDWALLS

NOTES:

USE CLASS 'A' CONCRETE.

USE ASTM A615-GRADE 60 REINFORCING STEEL.

USE DEFORMED BARS FOR ALL REINFORCING STEEL. WHERE SPLICING OF REINFORCMENT IS NECESSARY, BARS ARE TO BE LAPPED 45 DIAMETERS. ALL DIMENSIONS RELATIVE TO REINFORCEMENT ARE TO CENTERS OF BARS.

THE FOOTING, CURTAIN WALL AND 4" OF WALL ARE TO BE POURED IN ONE OPERATION ALLOWING NO TIME FOR INITIAL SET TO TAKE PLACE BETWEEN THEM. POUR THE REMAINING WALL IN ONE OPERATION.

CHAMFER ALL EXPOSED CORNERS 1".

PLACE 3" DIAMETER DRAINS IN WALL AS SHOWN 6" ABOVE NORMAL FLOW LINE.

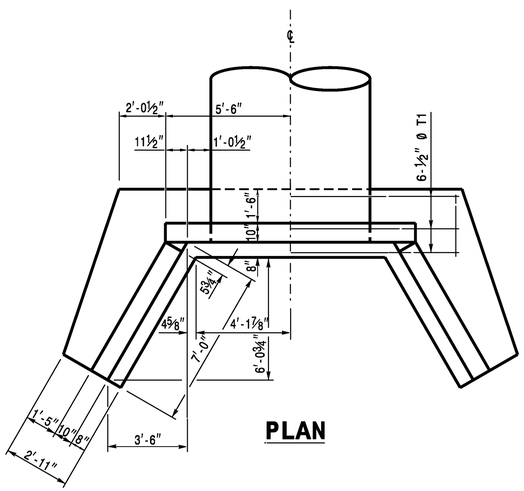

PLAN

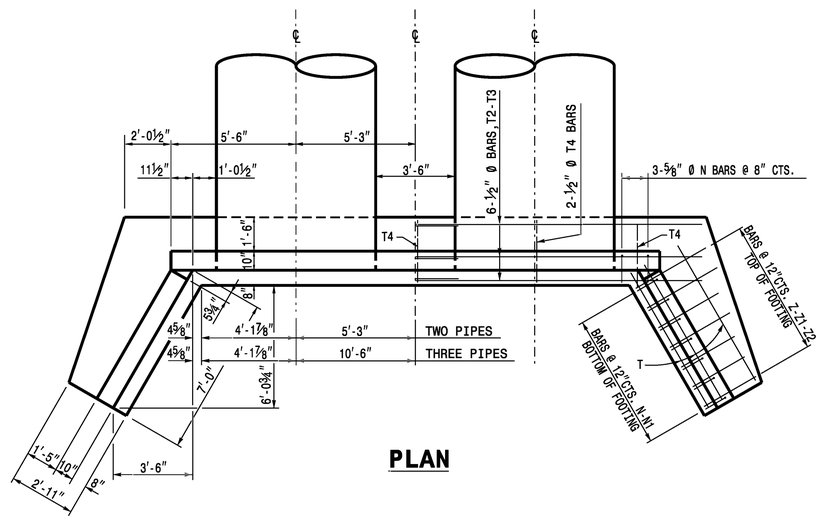

PLAN

BILL OF MATERIAL FOR ONE ENDWALL

REINFORCING STEEL			1 PIPE		2 PIPES		3 PIPES	
BAR	SIZE	LENGTH	NO.	WEIGHT	NO.	WEIGHT	NO.	WEIGHT
B	#4	6'-0"	8	32	16	64	24	96
G	#5	10'-9"	4	45	-	-	-	-
G1	#5	11'-9"	-	-	8	98	-	-
G2	#5	17'-0"	-	-	-	-	8	142
H	#4	9'-0"	10	60	10	60	10	60
H1	#4	7'-0"	6	28	6	28	6	28
H2	#4	3'-9"	4	10	4	10	4	10
N	#5	4'-6"	10	47	15	70	20	94
N1	#4	4'-1"	10	27	10	27	10	27
T	#4	6'-6"	6	26	6	26	6	26
T1	#4	15'-0"	6	60	-	-	-	-
T2	#4	13'-9"	-	-	12	110	-	-
T3	#4	19'-0"	-	-	-	-	12	152
T4	#4	2'-9"	4	7	7	13	10	18
V	#4	5'-9"	6	23	6	23	6	23
V1	#4	4'-6"	6	18	6	18	6	18
V2	#4	2'-9"	8	15	8	15	8	15
V3	#4	7'-6"	6	30	11	55	16	80
Z	#5	4'-9"	4	20	4	20	4	20
Z1	#4	4'-3"	4	11	4	11	4	11
Z2	#4	3'-6"	6	14	6	14	6	14
TOTAL REINF. STEEL (lbs.)			473		662		834	
CLASS "A" CONC. (cu. yds.)			7.9		10.8		13.8	

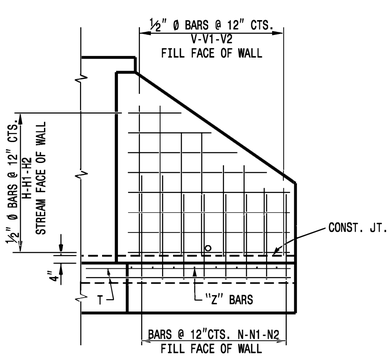

ELEVATION OF WING SHOWING REINFORCEMENT

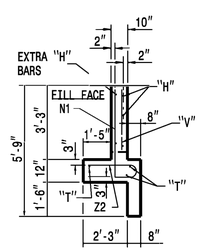

END OF WING

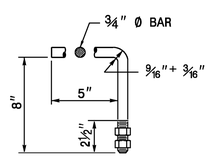

HOOK BOLT

HOOK BOLTS (CONSTRUCT ANCHORS AT 2'-0" CTS. ALONG THE CIRCUMFERENCE OF THE 6'-6" CSP. EMBED THE HOOK BOLTS IN THE CONCRETE ENDWALL 8" IN DEPTH. THE GALVANIZED ¾" DIA. HOOK BOLTS MUST MEET ASTM A-307 OR ASTM A-836. BOTH BOLTS AND NUTS MUST BE IN ACCORDANCE WITH ASTM A-153 FOR GALVANIZING.

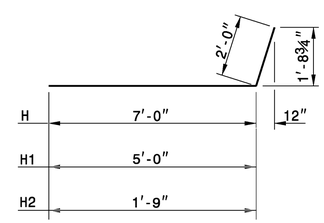

BARS H-H1-H2

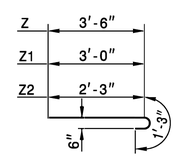

BARS Z-Z1-Z2

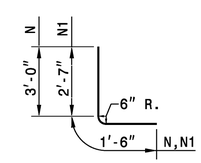

BARS N-N1

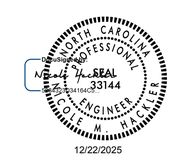

DOCUMENT NOT CONSIDERED FINAL UNLESS ALL SIGNATURES COMPLETED

CONTRACT STANDARDS & DEVELOPMENT UNIT
STANDARDS AND SPECIAL DESIGN
Office 919-707-6950 FAX 919-250-4119

DETAIL OF REINFORCED CONCRETE ENDWALL FOR 78" DIAMETER PIPE - 90° SKEW

ORIGINAL BY: _____ DATE: _____
MODIFIED BY: R.E.D.&T.S.S. DATE: 6-96 & 5-00
CHECKED BY: _____ DATE: _____
FILE SPEC.: w:details/stand/endwpip84sk90.dgn

24-APR-2019 09:54
S:\Contracts\Contracts\Special Details\english\hydro\endwalls.dgn
jhowerton AT CSD-292595

Docusign Envelope ID: D3D6B7DA-CC53-4063-A14A-8FB543504FCD

PROJECT REFERENCE NO.	SHEET NO.
HL-0033	2C-3

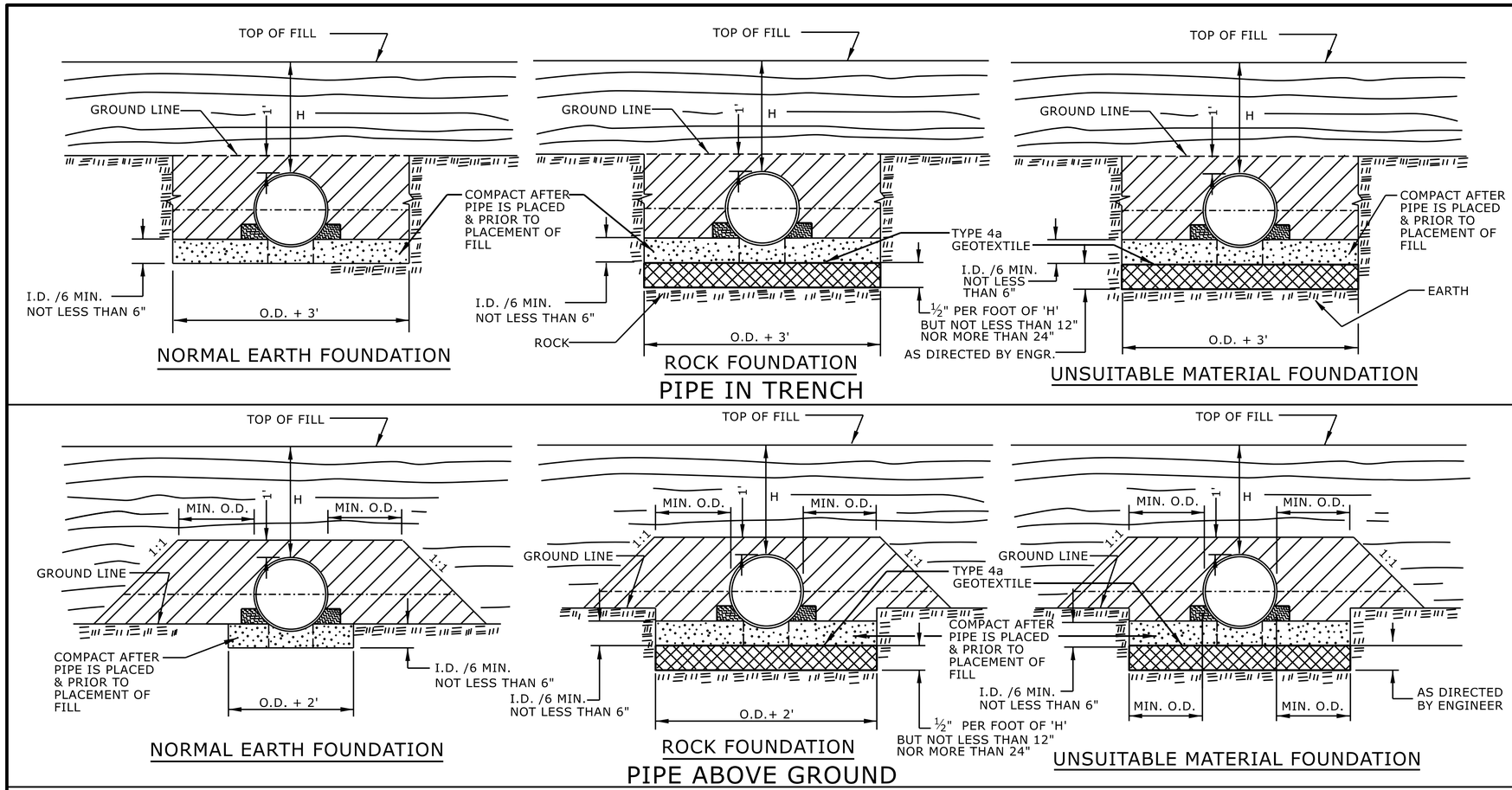

GENERAL NOTES:

I.D. = THE MAXIMUM HORIZONTAL INSIDE DIAMETER DIMENSION.

O.D. = THE MAXIMUM HORIZONTAL OUTSIDE DIAMETER DIMENSION.

H = THE FILL HEIGHT MEASURED VERTICALLY AT ANY POINT ALONG THE PIPE FROM THE TOP OF THE PIPE TO THE TOP OF THE EMBANKMENT AT THAT POINT.

APPROVED SUITABLE LOCAL MATERIAL.

TAKE CARE TO FULLY COMPACT HAUNCH ZONE OF PIPE BACKFILL.

LOOSELY PLACED SELECT MATERIAL CLASS III OR CLASS II, TYPE 1 FOR PIPE BEDDING. LEAVE SECTION DIRECTLY BENEATH PIPE UNCOMPACTED AS PIPE SEATING AND BACKFILL WILL ACCOMPLISH COMPACTION.

DO NOT OPERATE HEAVY EQUIPMENT OVER ANY PIPE CULVERT UNTIL THE PIPE CULVERT HAS BEEN PROPERLY BACKFILLED AND COVERED WITH AT LEAST 3 FEET OF APPROVED MATERIAL.

REFER TO NCDOT PIPE MATERIAL SELECTION GUIDE AND STANDARD SPECIFICATIONS FOR ALLOWABLE PIPE FILL HEIGHTS AND PIPE SPECIFICATIONS.

SPRINGLINE OF PIPE

SELECT BACKFILL MATERIAL CLASS III OR CLASS II, TYPE 1 ABOVE AND BELOW SPRINGLINE.

UNDISTURBED EARTH MATERIAL

SELECT MATERIAL CLASS V OR VI FOR FOUNDATION CONDITIONING. ENCAPSULATE WITH TYPE IV GEOTEXTILE AS DIRECTED BY THE ENGINEER.

STATE OF NORTH CAROLINA
DEPT. OF TRANSPORTATION
DIVISION OF HIGHWAYS
RALEIGH, N.C.

ROADWAY DETAIL DRAWING FOR

METHOD OF PIPE INSTALLATION

FLEXIBLE PIPE

NORTH CAROLINA PROFESSIONAL SEAL 033144 ENGINEER NICOLE M. HACKLER

Docusigned by: Nicole M. Hackler 12/22/2025

SHEET 1 OF 2

300.01

DOCUMENT NOT CONSIDERED FINAL UNLESS ALL SIGNATURES COMPLETED

CONTRACTS STANDARDS AND DEVELOPMENT UNIT
Office 919-707-6950 FAX 919-250-4119

SEE TITLE BLOCK

ORIGINAL BY: S.CALHOUN DATE: 7-25-2024
MODIFIED BY: DATE:
CHECKED BY: DATE:
FILE SPEC.:

Docusign Envelope ID: D3D6B7DA-CC53-4063-A14A-8FB543504FCD

PROJECT REFERENCE NO.	SHEET NO.
HL-0033	2C-4

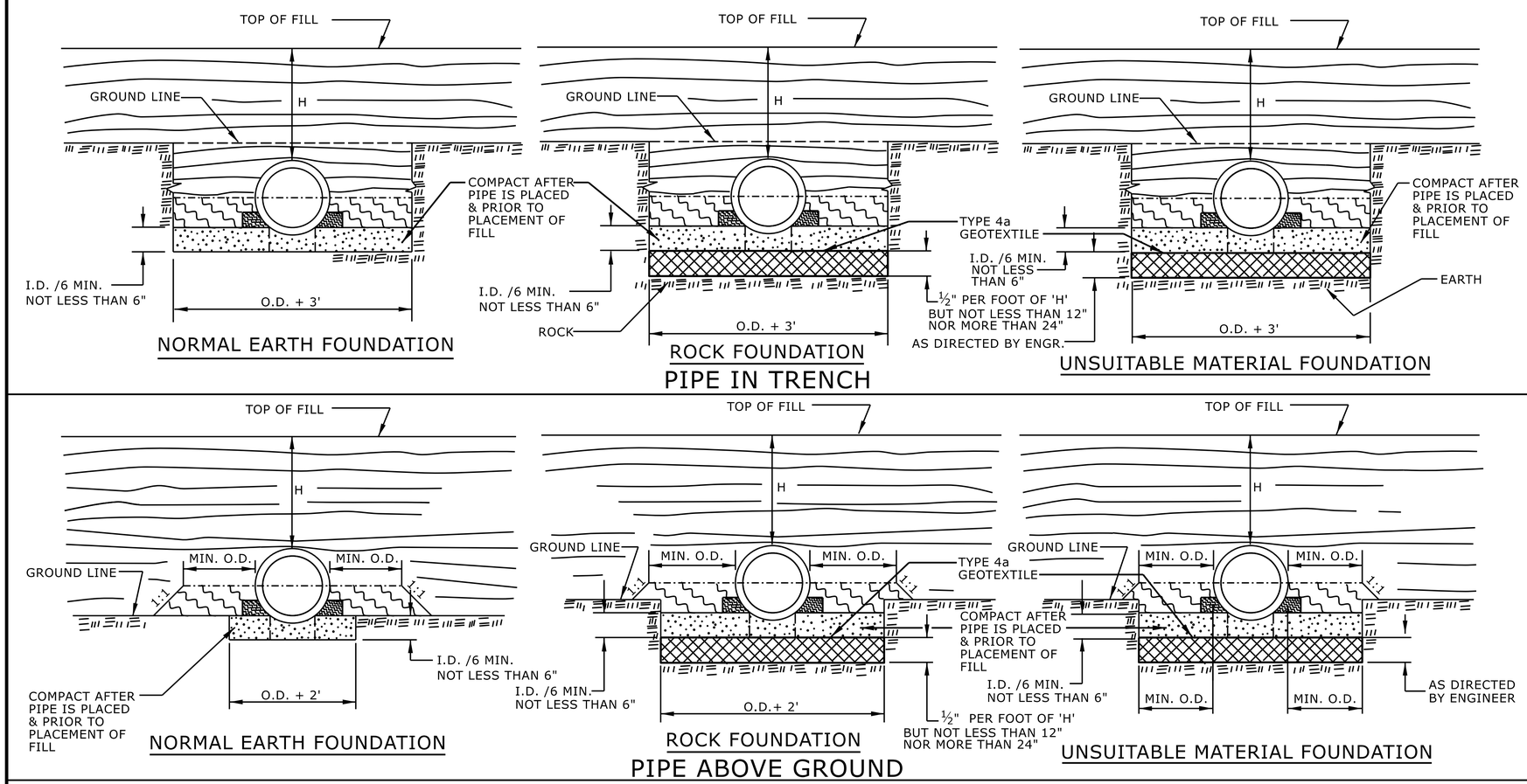

GENERAL NOTES:

I.D. = THE MAXIMUM HORIZONTAL INSIDE DIAMETER DIMENSION.

O.D. = THE MAXIMUM HORIZONTAL OUTSIDE DIAMETER DIMENSION.

H = THE FILL HEIGHT MEASURED VERTICALLY AT ANY POINT ALONG THE PIPE FROM THE TOP OF THE PIPE TO THE TOP OF THE EMBANKMENT AT THAT POINT.

APPROVED SUITABLE LOCAL MATERIAL.

TAKE CARE TO FULLY COMPACT HAUNCH ZONE OF PIPE BACKFILL.

LOOSELY PLACED SELECT MATERIAL CLASS III OR CLASS II, TYPE 1 FOR PIPE BEDDING. LEAVE SECTION DIRECTLY BENEATH PIPE UNCOMPACTED AS PIPE SEATING AND BACKFILL WILL ACCOMPLISH COMPACTION.

DO NOT OPERATE HEAVY EQUIPMENT OVER ANY PIPE CULVERT UNTIL THE PIPE CULVERT HAS BEEN PROPERLY BACKFILLED AND COVERED WITH AT LEAST 3 FEET OF APPROVED MATERIAL.

REFER TO NCDOT PIPE MATERIAL SELECTION GUIDE AND STANDARD SPECIFICATIONS FOR ALLOWABLE PIPE FILL HEIGHTS AND PIPE SPECIFICATIONS.

SPRINGLINE OF PIPE

SELECT BACKFILL MATERIAL CLASS III OR CLASS II, BELOW SPRINGLINE.

UNDISTURBED EARTH MATERIAL

SELECT MATERIAL CLASS V OR VI FOR FOUNDATION CONDITIONING. ENCAPSULATE WITH TYPE IV GEOTEXTILE AS DIRECTED BY THE ENGINEER.

STATE OF NORTH CAROLINA
DEPT. OF TRANSPORTATION
DIVISION OF HIGHWAYS
RALEIGH, N.C.

ROADWAY DETAIL DRAWING FOR

METHOD OF PIPE INSTALLATION

RIGID PIPE

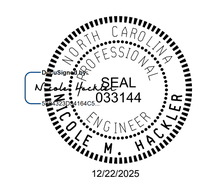

SHEET 2 OF 2

300.01

DOCUMENT NOT CONSIDERED FINAL UNLESS ALL SIGNATURES COMPLETED

CONTRACTS STANDARDS AND DEVELOPMENT UNIT
Office 919-707-6950 FAX 919-250-4119

SEE TITLE BLOCK

ORIGINAL BY: S.CALHOUN DATE: 7-25-2024
MODIFIED BY: DATE:
CHECKED BY: DATE:
FILE SPEC.:

Docusign Envelope ID: D3D6B7DA-CC53-4063-A14A-8FB543504FCD

PROJECT REFERENCE NO.	SHEET NO.
HL-0033	2C-5

PLACE APPROVED BICYCLE FRIENDLY RAILINGS, FENCE, OR RUB RAILS IF SIDEPATH/SHARED-USE PATH IS LOCATED LESS THAN 4 FEET FROM THE POST

SEE THE ROADWAY DESIGN MANUAL (PART I CHAPTER 4 SECTION 4.14) FOR OFFSET DISTANCES FROM FACE OF GUARDRAIL AND BACK OF GUARDRAIL TO SIDEWALK OR SIDEPATH/SHARED-USE PATH

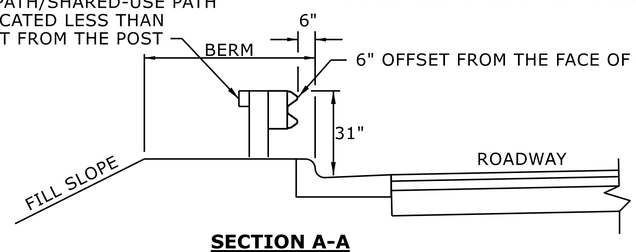

SECTION A-A

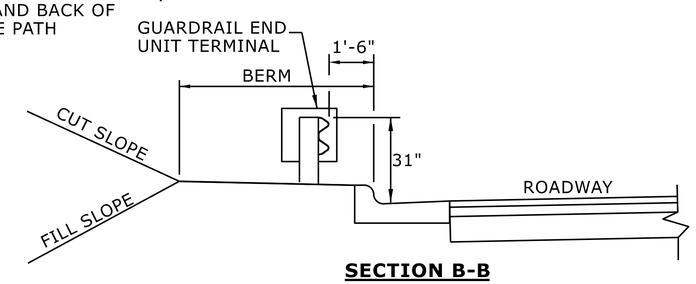

SECTION B-B

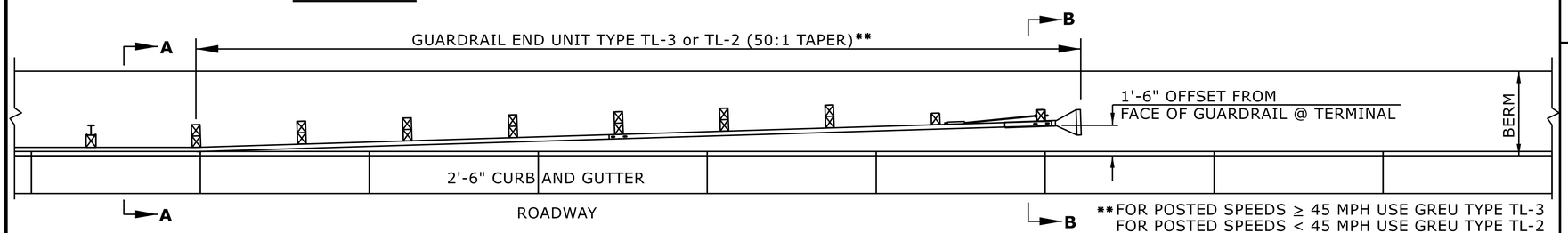

GUARDRAIL 6" FROM THE FACE OF CURB

** FOR POSTED SPEEDS ≥ 45 MPH USE GREU TYPE TL-3
FOR POSTED SPEEDS < 45 MPH USE GREU TYPE TL-2

BICYCLE FRIENDLY RAILINGS, FENCE OR RUB RAIL SHOULD NOT BE PLACED WITHIN THE LIMITS OF THE STRUCTURAL ANCHOR OR END UNITS

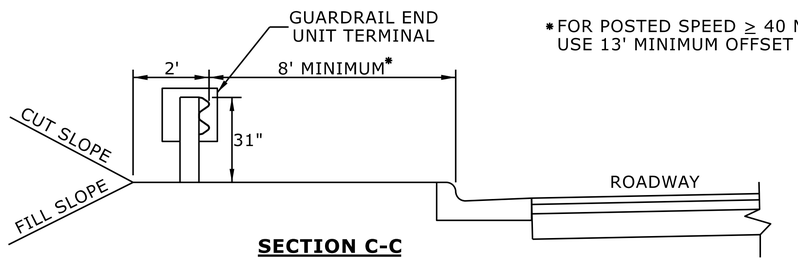

SECTION C-C

* FOR POSTED SPEED ≥ 40 MPH USE 13' MINIMUM OFFSET

SEE THE ROADWAY DESIGN MANUAL (PART I CHAPTER 4 SECTION 4.14) FOR OFFSET DISTANCES FROM FACE OF GUARDRAIL AND BACK OF GUARDRAIL TO SIDEWALK OR SIDEPATH/SHARED-USE PATH

** FOR POSTED SPEEDS ≥ 45 MPH USE GREU TYPE TL-3
FOR POSTED SPEEDS < 45 MPH USE GREU TYPE TL-2

BICYCLE FRIENDLY RAILINGS, FENCE OR RUB RAIL SHOULD NOT BE PLACED WITHIN THE LIMITS OF THE STRUCTURAL ANCHOR OR END UNITS

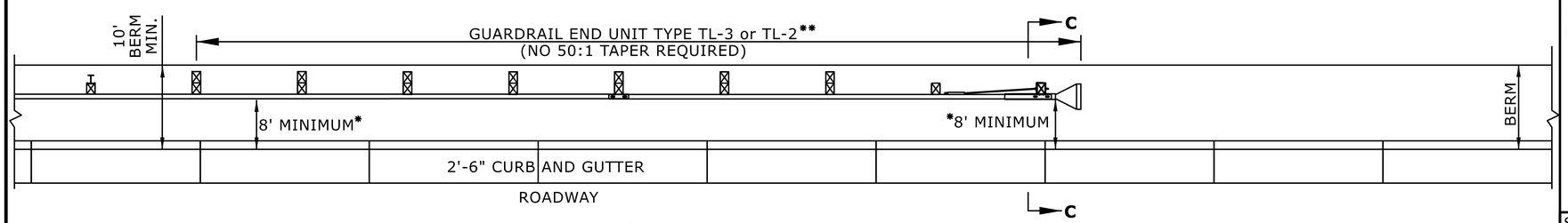

GUARDRAIL 8' OR GREATER OFFSET FROM FACE OF CURB

STATE OF
NORTH CAROLINA
DEPT. OF TRANSPORTATION
DIVISION OF HIGHWAYS
RALEIGH, N.C.

ROADWAY DETAIL DRAWING FOR
GUARDRAIL PLACEMENT
GUARDRAIL TREATMENT AT CURB AND GUTTER

SHEET 12 OF 15

862D01

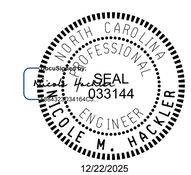

DOCUMENT NOT CONSIDERED FINAL UNLESS ALL SIGNATURES COMPLETED

CONTRACTS STANDARDS AND DEVELOPMENT UNIT
Office 919-707-6950 FAX 919-250-4119

SEE TITLE BLOCK

ORIGINAL BY: S.CALHOUN DATE: 7-25-2024
MODIFIED BY: DATE:
CHECKED BY: DATE:
FILE SPEC.:

Docusign Envelope ID: D3D6B7DA-CC53-4063-A14A-8FB543504FCD

PROJECT REFERENCE NO.	SHEET NO.
HL-0033	2C-6

NOTES:

CONSTRUCT STANDARD SIDEWALK 5' WIDE AND 4" THICK UNLESS OTHERWISE DENOTED ON PLANS.

PLACE A GROOVE JOINT 1" DEEP WITH ⅛" RADII IN THE CONCRETE SIDEWALK AT 5' INTERVALS. ONE ½" EXPANSION JOINT WILL BE REQUIRED AT 50' INTERVALS. A ½" EXPANSION JOINT WILL BE REQUIRED WHERE THE SIDEWALK JOINS ANY RIGID STRUCTURE.

SEE STD. DWG. 848.06 FOR CURB RAMP LOCATION REQUIREMENTS AND CONSTRUCTION GUIDELINES.

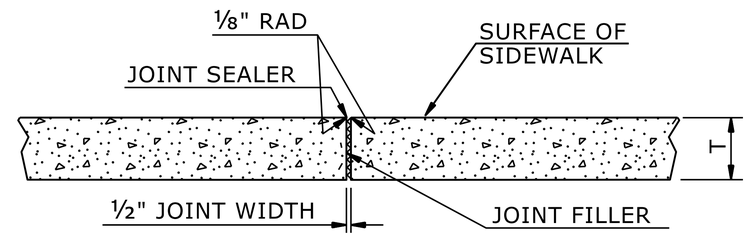

T = SIDEWALK THICKNESS

TRANSVERSE EXPANSION JOINT IN SIDEWALK

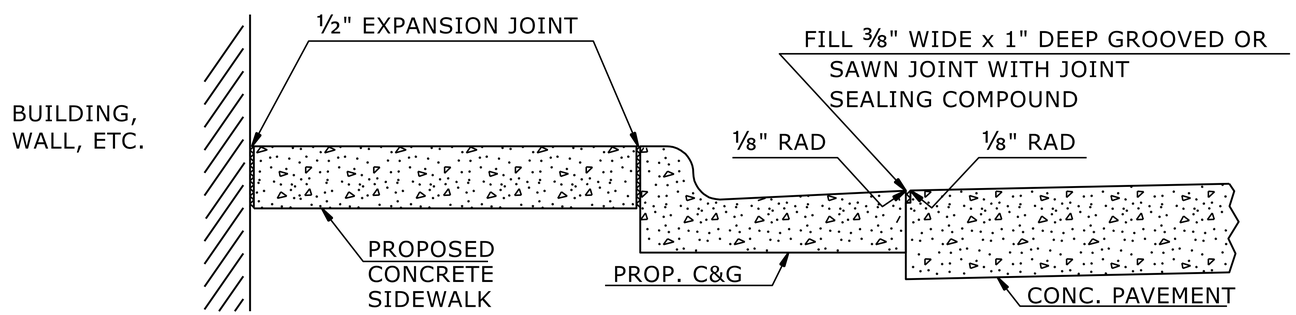

DETAILS SHOWING JOINTS IN CONCRETE SIDEWALK

STATE OF NORTH CAROLINA
DEPT. OF TRANSPORTATION
DIVISION OF HIGHWAYS
RALEIGH, N.C.

ROADWAY DETAIL DRAWING FOR
CONCRETE SIDEWALK

SHEET 1 OF 1

848D01

NORTH CAROLINA PROFESSIONAL SEAL 033144 ENGINEER NICOLE M. HACKLER

Docusigned by: Nicole Hackler 12/22/2025

DOCUMENT NOT CONSIDERED FINAL UNLESS ALL SIGNATURES COMPLETED

CONTRACTS STANDARDS AND DEVELOPMENT UNIT
Office 919-707-6950 FAX 919-250-4119

SEE TITLE BLOCK

ORIGINAL BY: S.CALHOUN DATE: 7-25-2024
MODIFIED BY: DATE:
CHECKED BY: DATE:
FILE SPEC.:

Docusign Envelope ID: D3D6B7DA-CC53-4063-A14A-8FB543504FCD

PROJECT REFERENCE NO.	SHEET NO.
HL-0033	2C-7

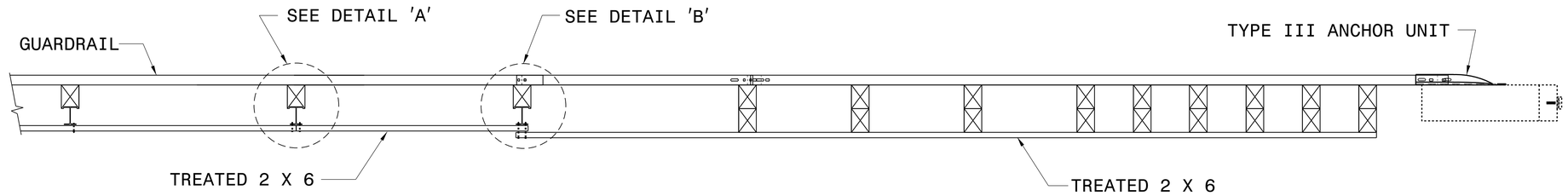

PLAN

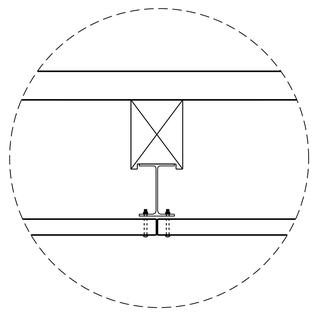

DETAIL 'A'

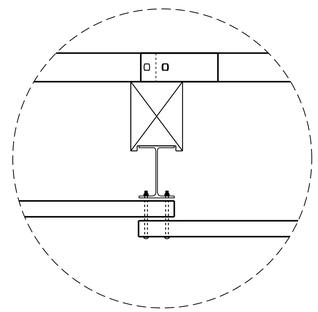

DETAIL 'B'

USE BOLTS AND NUTS FROM TYPE III ANCHOR UNIT TO FASTEN 2 X 6 WOOD RAILS TO THE WOOD POSTS - BOLTS MAY NEED TO BE LENGTHENED TO ACCOMMODATE FOR THE 2 X 6 WOOD RAILS.

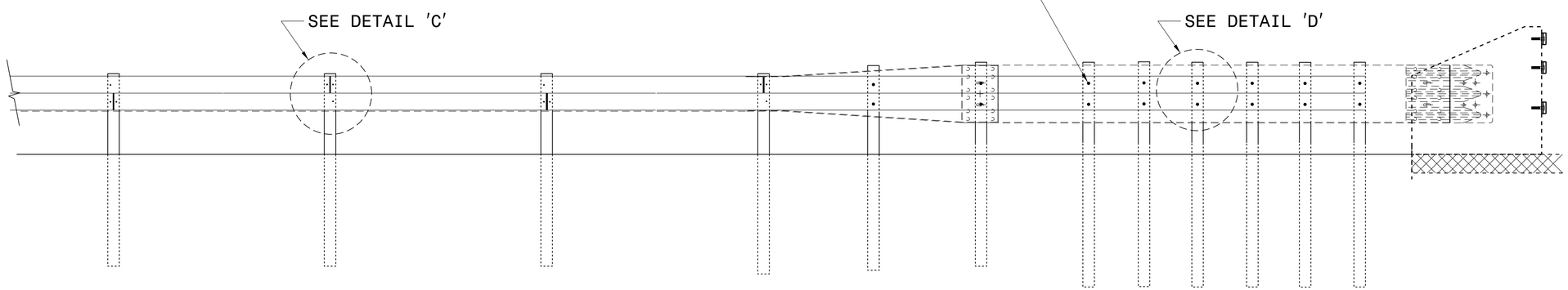

ELEVATION

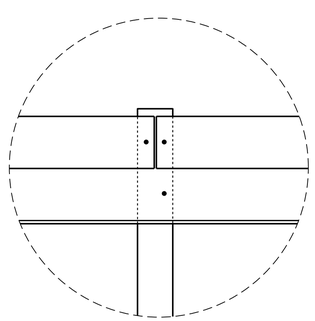

DETAIL 'C'

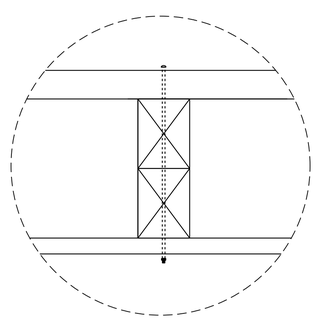

DETAIL 'D'

NOTES:

1. USE #2 SYP TREATED 2 X 6 FOR WOOD RAIL.
2. USE GUARDRAIL BOLTS TO FASTEN WOOD RAIL TO GUARDRAIL POSTS. SEE ROADWAY STD.NO.862.02.
3. THE MOUNTING HEIGHT OF THE WOOD RAIL TO BE DETERMINED IN THE FIELD.
4. PLACE THE TREATED 2 X 6 WOOD RAIL AS DIRECTED BY THE ENGINEER.
5. DO NOT PLACE WOOD RAIL WITHIN THE PAY LIMITS OF THE GREU.

NORTH CAROLINA PROFESSIONAL SEAL 33144 ENGINEER NICOLE M. HACKLER

Docusigned by: Nicole M. Hackler SEAL 33144 5B9F2C8B7B104C9...

12/22/2025

DOCUMENT NOT CONSIDERED FINAL UNLESS ALL SIGNATURES COMPLETED

CONTRACT STANDARDS AND DEVELOPMENT UNIT
PLANS AND STANDARDS SECTION
Office 919-707-6950 FAX 919-250-4119

DETAIL OF WOOD RUB RAIL

ORIGINAL BY: STD.862 DATE: 1-25-12
MODIFIED BY: DATE:
CHECKED BY: DATE:
FILE SPEC.: jhowerton/Wood Rail on Back of Guardrail

23-AUG-2018 09:52
S:\Contracts\Contracts\Special Details\jhowerton\Wood Rail on the Back of Guardrail.dgn
jhowerton AT CSD-2926595

Docusign Envelope ID: D3D6B7DA-CC53-4063-A14A-8FB543504FCD

5/14/99

PROJECT REFERENCE NO.	SHEET NO.
HL-0033	2C-8

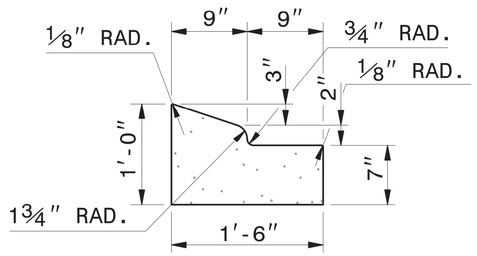

1'-6" CURB AND GUTTER

NOTE: SEE STD. DWG. 846.01 FOR ADDITIONAL CURB AND GUTTER INFORMATION.

SEE ROADWAY PLANS FOR LOCATION OF CURB TRANSITION.

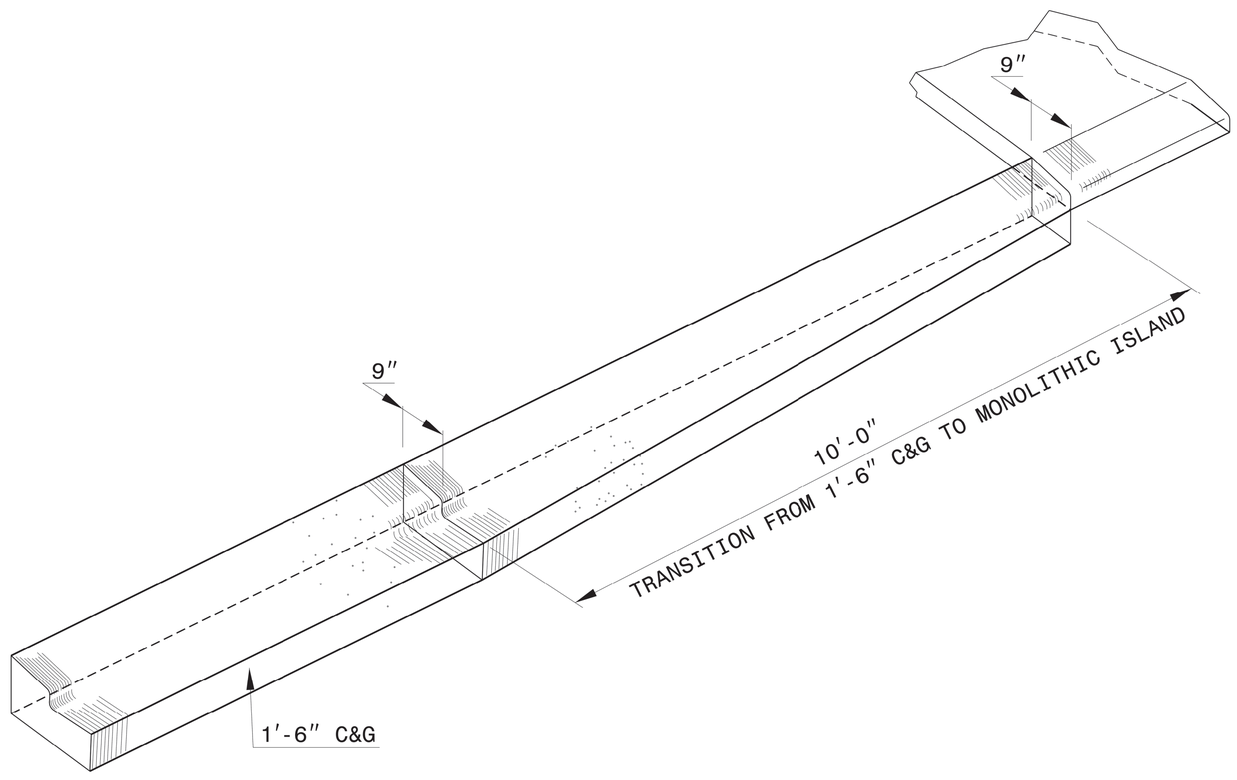

ISOMETRIC VIEW OF TRANSITIONING CURB & GUTTER

Docu Signed by:
Nathan Hacker
5B9B1C2A0A7B4C5...

NORTH CAROLINA PROFESSIONAL SEAL 33144 ENGINEER NATHAN COLE M. HACKER

12/22/2025

DOCUMENT NOT CONSIDERED FINAL UNLESS ALL SIGNATURES COMPLETED

CONTRACTS STANDARDS AND DEVELOPMENT UNIT
Office 919-707-6950 FAX 919-250-4119

DETAIL OF 1'-6" CURB & GUTTER TRANSITION SECTION

ORIGINAL BY: _____ DATE: _____
MODIFIED BY: KKEMPF DATE: 09-24-14
CHECKED BY: _____ DATE: _____
FILE SPEC.: kkempf/english/curb gutter tansition.dgn

COMPUTED BY: CCP	DATE: 11/10/25
CHECKED BY: CYF	DATE: 11/10/25

STATE OF NORTH CAROLINA
DIVISION OF HIGHWAYS

PROJECT REFERENCE NO.	SHEET NO.
HL-0033	3B-1

SUMMARY OF EARTHWORK IN CUBIC YARDS

LOCATION	EXCAVATION		EMBANKMENT	BORROW	WASTE
	TOTAL UNCLASS.	UNDERCUT	EMBANK. +%		TOTAL WASTE
SUMMARY #1 (PHASE 1)					
-L- 13+60 TO 27+00	6,567	1,233	5,898	931	2,833
-Y- 10+25 TO 11+80	2	--	577	575	--
-Y- 12+80 TO 14+00	268	--	0	--	268
TOTAL SUMMARY #1	6,837	1,233	6,475	1,506	3,101
SUMMARY #2 (PHASE 1)					
-L- 27+00 TO 36+00	22,959	2,530	109	--	25,380
TOTAL SUMMARY #2	22,959	2,530	109	--	25,380
SUMMARY #3 (PHASE 3)					
-Y1- LEFT 13+60 TO 19+44	484	--	8	--	476
-Y1- LEFT 20+35 TO 25+00	354	--	546	192	--
TOTAL SUMMARY #3	838	--	554	--	476
SUMMARY #4 (PHASE 3)					
-Y1- RIGHT 15+00 TO 19+44	286	--	19	--	267
-Y1- RIGHT 20+35 TO 25+00	235	--	82	--	153
TOTAL SUMMARY #4	521	--	101	--	420
SUMMARY #5 (PHASE 2)					
-Y2- LEFT 12+00 TO 27+00	1,290	--	455	--	835
TOTAL SUMMARY #5	1,290	--	455	--	835
SUMMARY #6 (PHASE 2)					
-Y2- RIGHT 15+00 TO 25+00	1,629	--	1,788	159	--
TOTAL SUMMARY #6	1,629	--	1,788	159	--
TOTAL SUMMARIES 1-6	34,074	3,763	9,481	1,857	30,212
LOSS DUE TO CLEARING & GRUBBING	-1,200	--	--	--	-1,200
ADDITIONAL UNDERCUT	--	1,500	1,800	1,800	1,500
WASTE IN LIEU OF BORROW	--	--	--	-3,657	-3,657
GRAND TOTAL	32,874	5,263	11,281	--	26,854
SAY	32,900	5,300			

NOTE: EARTHWORK QUANTITIES ARE CALCULATED BY LOCHNER. THESE EARTHWORK QUANTITIES ARE BASED, IN PART, ON SUBSURFACE DATA PROVIDED BY FALCON ENGINEERING.

NOTE: APPROXIMATE QUANTITIES ONLY. FINE GRADING, CLEARING AND GRUBBING, SHOULDER BORROW, AND REMOVAL OF EXISTING PAVEMENT WILL BE PAID FOR AT THE CONTRACT LUMP SUM PRICE FOR GRADING.

EST. DDE = 100 CUBIC YARDS

PER GEOTECH RECOMMENDATION, ESTIMATED 5,650 CUBIC YARDS OF SELECT GRANULAR MATERIAL TO BE USED IN THE DISCRETION OF THE RESIDENT ENGINEER.

EST. SHALLOW UNDERCUT = 100 CY

EST. SHOULDER BORROW = 200 CY

SUMMARY OF REMOVAL EXISTING ASPHALT PAVEMENT

SURVEY LINE	STATION	STATION	LOCATION LT/RT/CL	YD^2
-L-	13+60.00	15+42.41	LT	712.48
-L-	13+60.00	15+42.41	RT	593.61
-Y-	10+25.00	14+00.00	CL	405.95
-Y1-	14+75.00	16+49.06	RT	178.95
-Y2-	15+61.70	17+63.89	LT	102.37
-Y2-	17+34.64	17+76.53	LT	14.36
-Y2-	18+41.07	19+91.95	LT	283.77
-Y2-	24+99.00	26+13.00	LT	46.68
			TOTAL:	2,338.17
			SAY:	2,400

"N" = DISTANCE FROM EDGE OF LANE TO FACE OF GUARDRAIL.
TOTAL SHOULDER WIDTH = DISTANCE FROM EDGE OF TRAVEL LANE TO SHOULDER BREAK POINT.
FLARE LENGTH = DISTANCE FROM LAST SECTION OF PARALLEL GUARDRAIL TO END OF GUARDRAIL.
W = TOTAL WIDTH OF FLARE FROM BEGINNING OF TAPER TO END OF GUARDRAIL.
G = GATING IMPACT ATTENUATOR TYPE 350
NG = NON-GATING IMPACT ATTENUATOR TYPE 350

GUARDRAIL SUMMARY

SURVEY LINE	BEG. STA.	END STA.	LOCATION	LENGTH			WARRANT POINT		"N" DIST. FROM E.O.L.	TOTAL SHOUL. WIDTH	FLARE LENGTH		W		ANCHORS								IMPACT ATTENUATOR TYPE 350			SINGLE FACED GUARDRAIL	REMOVE EXISTING GUARDRAIL	REMOVE AND STOCKPILE EXISTING GUARDRAIL	REMARKS
				STRAIGHT	SHOP CURVED	DOUBLE FACED	APPROACH END	TRAILING END			APPROACH END	TRAILING END	APPROACH END	TRAILING END	XI MOD	XI	GREU TL-3	M-350	XIII	CAT-1	VI MOD	BIC	AT-1	EA	G	NG				
-L-	14+04.38	17+59.49	RT	368.75'			15+75.00	16+53.59	2.5'	N/A							1			1										
-L-	15+37.49	17+52.09	LT	206.25'				16+20.00	2.5'	N/A							1			1										GRAIL W/WOOD RUB RAIL REQ. -L- STA. 15+75.00 TO 17+53.24
-L-	17+80.00	19+11.25	RT	131.25'			18+39.80		2.5'	N/A							1			1										GRAIL TO SPAN CULVERT;GRAIL W/WOOD RUB RAIL REQ. -L- STA. 18+30.00 TO 19+05.00
-L-	17+76.00	22+07.25	LT	431.25'			19+12.73		2.5'	N/A							1			1										GUARDRAIL TO SPAN CULVERT
			SUB-TOTAL	1137.50'													4			4										
	LESS ANCHORS																													
		GREU TL-3	4 @ 50.00	200.00'																										
		CAT-1	4 @ 6.25	25.00'																										
		25' CLEAR SPAN	2 @ 25.00	50.00'																										
			TOTAL	862.50'			2- 25' CLEAR SPAN GUARDRAIL SECTIONS																							
			SAY	875.00'			5- ADDITIONAL GUARDRAIL POSTS																							
							SAY 260' WOOD RUB RAIL																							

12/3/2025
HL_0033_PSH_03B.dgn

AP-SCG3383XN5

COMPUTED BY:	VHB	DATE:	11/25/2025
CHECKED BY:	VHB	DATE:	11/25/2025

NORTH CAROLINA DEPARTMENT OF TRANSPORTATION
DIVISION OF HIGHWAYS

PROJECT NO.	SHEET NO.
HL-0033	3D-1

Note: Invert Elevations indicated are for Bid Purposes only and shall not be used for project construction stakeout. See "Standard Specifications For Roads and Structures, Section 300-5".

LIST OF PIPES, ENDWALLS, ETC. (FOR PIPES 48 INCHES & UNDER)

| LINE & STATION / SIZE / THICKNESS OR GAUGE | OFFSET | STRUCTURE NUMBER FROM | STRUCTURE NUMBER TO | TOP ELEVATION FT. | INVERT ELEVATION FT. | INVERT ELEVATION FT. | MINIMUM REQUIRED SLOPE % | Drainage Pipe (RCP, CSP, CAAP, HDPE, PVC, or PP PIPE) 12 | 15 | 18 | 24 | DO NOT USE RCP | DO NOT USE CSP | DO NOT USE CAAP | DO NOT USE HDPE | DO NOT USE PVC | DO NOT USE PP PIPE | C. S. PIPE 12 .064 | 15 .064 | 18 .064 | 24 .064 | R. C. PIPE CLASS III 12 | 15 | 18 | 24 | 30 | R. C. PIPE CLASS IV 12 | 15 | 18 | 24 | 30 | 36 | 72 | 78 | 84 | | R. C. PIPE CLASS V 12 | 15 | 18 | 24 | STRUCTURAL PLATE PIPE 60 | 66 | 72 | | | ### R.C. PIPE CULVERTS, CONTRACTOR DESIGN | 15" SIDE DRAIN PIPE | 18" SIDE DRAIN PIPE | 24" SIDE DRAIN PIPE | | ENDWALLS STD. 838.01 OR STD. 838.11 (UNLESS NOTED OTHERWISE) CY | REINFORCED ENDWALLS CY | DRAINAGE STRUCTURE MASONRY CY | QUANTITIES FOR DRAINAGE STRUCTURES NOTE: TOTAL LIN. FT. FOR PAY QUANTITY SHALL BE A + (1.3 X B) 0' THRU 5' EACH | A 5' THRU 10' LIN. FT. | B 10' AND ABOVE LIN. FT. | C.B. STD. 840.01 OR STD. 840.02 | FRAME, GRATES, AND HOOD STD. 840.03 GRATE TYPE E | F | G | | CONCRETE TRANSITIONAL SECTION D.I. STD. 852.04 OR STD. 852.06 | C.B. STD. 852.05 | OPEN THROAT C.B. STD. 840.04 OR STD. 840.05 | CONCRETE BRIDGE APPROACH D.I. STD. 840.13 | D.I. STD. 840.14 OR STD. 840.15 | D.I. FRAME AND GRATES STD. 840.16 | G.D.I. (N.S. SAG) FRAME W/ 2 GRATES STD. 840.24 | G.D.I. (N.S. FLAT) FRAME W/ GRATE STD. 840.29 | G.D.I. (N.S. FLAT) FRAME W/ 2 GRATES STD. 840.29 | DRIVEWAY D.I. STD. 840.30 | FRAME W/ GRATE FOR DRIVEWAY STD. 840.30 | J.B. STD. 840.31 OR STD. 840.32 | M.H. FRAME AND COVER STD. 840.54 | | CONVERT EXISTING J.B. TO D.I. | ADJUST C.B. | ADJUST D.I. | | FLOWABLE FILL CY | CONCRETE COLLARS CL. "B" STD. 840.72 CY | CONCRETE AND BRICK PIPE PLUG STD. 840.71 CY | PIPE REMOVAL LIN. FT. | REMARKS |
|---|---|---|---

AP-5CG3383XN5

COMPUTED BY:	VHB	DATE:	11/25/2025
CHECKED BY:	VHB	DATE:	11/25/2025

NORTH CAROLINA DEPARTMENT OF TRANSPORTATION
DIVISION OF HIGHWAYS

PROJECT NO.	SHEET NO.
HL-0033	3D-2

Note: Invert Elevations indicated are for Bid Purposes only and shall not be used for project construction stakeout. See "Standard Specifications For Roads and Structures, Section 300-5".

LIST OF PIPES, ENDWALLS, ETC. (FOR PIPES 48 INCHES & UNDER)

LINE & STATION / SIZE / THICKNESS OR GAUGE	OFFSET	STRUCTURE NUMBER FROM	STRUCTURE NUMBER TO	TOP ELEVATION FT.	INVERT ELEVATION FT.	INVERT ELEVATION FT.	MINIMUM REQUIRED SLOPE %	Drainage Pipe (RCP, CSP, CAAP, HDPE, PVC, or PP PIPE) 12	15	18	24	DO NOT USE RCP	DO NOT USE CSP	DO NOT USE CAAP	DO NOT USE HDPE	DO NOT USE PVC	DO NOT USE PP PIPE	C. S. PIPE 12 .064	15 .064	18 .064	24 .064	R. C. PIPE CLASS III 12	15	18	24	30	R. C. PIPE CLASS IV 12	15	18	24	30	36	72	78	84		R. C. PIPE CLASS V 12	15	18	24	STRUCTURAL PLATE PIPE 60	66	72		
Y1 17+20	34 LT	0505		348.7																																									
		0505	0506		345.4	344.4																						112																
Y1 16+07	29 LT	0506		347.6																																									
		0506	0507		344.0	342.8	1.1																						100																
Y1 15+05	24 LT	0507		346.3																																									
		0507	EX.0508		342.8	339.6	1.2																						144																
Y1 16+07	39 RT	0510		348.2																																									
		0510	0506		344.4	344.0	0.6																						68																
Y1 16+68	39 RT	0511		348.2																																									
		0511	0510		344.7	344.4	0.5																						60																
Y1 17+70	51 RT	0512		348.9																																									
		0512	0511		345.4	344.7	0.4																						104																
Y1 18+85	51 RT	0513		351.0																																									
		0513	0512		347.8	345.6	0.9																					116																	
L 27+98	5 RT	0514		352.7																																									
		0514	0515		349.4	349.3																						28																	
L 28+25	5 RT	0515		352.8																																									
		0515	0516		349.3	348.7																						28																	
L 28+25	36 RT	0516		352.0																																									
		0516	0540		348.7	348.3	0.7																					68																	
L 28+80	5 RT	0517		353.2																																									
		0517	0515		350.0	349.6																						52																	
L 29+50	5 RT	0518		353.7																																									
		0518	0517		350.5	350.0																						68																	
L 29+75	36 RT	0519		352.9																																									
		0519	0516		349.7	348.7																						148																	
L 30+25	5 RT	0520		354.1																																									
		0520	0518		350.9	350.5																						72																	
L 31+00	5 RT	0521		354.5																																									
		0521	0520		351.3	350.9																						72																	
L 32+68	7 LT	0522		354.2																																									
		0522	0523		351.0	349.7																						52																	
L 32+68	48 RT	0523		352.9																																									
		0523	0524		349.7	346.6																						188																	
L 34+55	48 RT	0524		349.8																																									
		0524	0527		346.6	345.8																						64																	
L 34+70	36 LT	0525		349.7																																									
		0525	0526		346.5	345.9																						48																	
L 35+18	36 LT	0526		349.1																																									
		0526	0527		345.9	345.5																						84																	
L 35+18	48 RT	0527		349.0																																									
		0527	0528		345.5	344.6	0.5																					72																	
L 35+87	73 RT	0528		347.9																																									
		0528	0530		344.4	343.9																							104																
Y2 17+43	38 LT	0529		347.5																																									
		0529	0530		344.3	344.1																						24																	
Y2 17+45	15 LT	0530		347.7																																									
		0530	0533		343.9	343.3	0.8																						68																
Y2 17+00	14 LT	0531		347.9																																									
		0531	0530		344.6	344.4																						44																	
						SHEET TOTALS																						1340	648																	

LINE & STATION / SIZE / THICKNESS OR GAUGE	## R.C. PIPE CULVERTS, CONTRACTOR DESIGN	15" SIDE DRAIN PIPE	18" SIDE DRAIN PIPE	24" SIDE DRAIN PIPE		ENDWALLS STD. 838.01 OR STD. 838.11 (UNLESS NOTED OTHERWISE) CY	REINFORCED ENDWALLS CY	DRAINAGE STRUCTURE MASONRY CY	QUANTITIES FOR DRAINAGE STRUCTURES (NOTE: TOTAL LIN. FT. FOR PAY QUANTITY SHALL BE A + (1.3 X B)) 0' THRU 5' EACH	A 5' THRU 10' LIN. FT.	B 10' AND ABOVE LIN. FT.	C.B. STD. 840.01 OR STD. 840.02	FRAME, GRATES, AND HOOD STD. 840.03 GRATE TYPE E	F	G	CONCRETE TRANSITIONAL SECTION D.I. STD. 852.04 OR STD. 852.06	C.B. STD. 852.05	OPEN THROAT C.B. STD. 840.04 OR STD. 840.05	CONCRETE BRIDGE APPROACH D.I. STD. 840.13	D.I. STD. 840.14 OR STD. 840.15	D.I. FRAME AND GRATES STD. 840.16	G.D.I. (N.S. SAG) FRAME W/ 2 GRATES STD. 840.24	G.D.I. (N.S. FLAT) FRAME W/ GRATE STD. 840.29	G.D.I. (N.S. FLAT) FRAME W/ 2 GRATES STD. 840.29	DRIVEWAY D.I. STD. 840.30	FRAME W/ GRATE FOR DRIVEWAY STD. 840.30	J.B. STD. 840.31 OR STD. 840.32	M.H. FRAME AND COVER STD. 840.54		CONVERT EXISTING J.B. TO D.I.	ADJUST C.B.	ADJUST D.I.		FLOWABLE FILL CY	CONCRETE COLLARS CL. "B" STD. 840.72 CY	CONCRETE AND BRICK PIPE PLUG STD. 840.71 CY	PIPE REMOVAL LIN. FT.	REMARKS
Y1 17+20									1			1		1																														
Y1 16+07									1			1		1																														
Y1 15+05									1			1		1																														
Y1 16+07									1			1			1																													
Y1 16+68									1			1			1																													
Y1 17+70									1			1			1																													
Y1 18+85									1			1			1																													
L 27+98									1								1				1	1																						
L 28+25									1								1				1	1																						
L 28+25									1			1			1																													
L 28+80									1								1				1	1																						
L 29+50									1								1				1	1																						
L 29+75									1			1			1																													
L 30+25									1								1				1	1																						
L 31+00									1								1				1	1																						
L 32+68									1								1				1	1																						
L 32+68									1			1		1																														
L 34+55									1			1		1																														
L 34+70									1			1			1																													
L 35+18									1			1			1																													
L 35+18									1			1		1																														
L 35+87									1			1		1																														
Y2 17+43									1												1	1																						
Y2 17+45									1			1			1																													
Y2 17+00									1			1			1																													
SHEET TOTALS									25			17		7	10		7				8	8																						

ABBREVIATIONS

C.A.A.	CORRUGATED ALUMINIUM ALLOY
C.B.	CATCH BASIN
C.S.	CORRUGATED STEEL
D.I.	DROP INLET
G.D.I.	GRATED DROP INLET
H.D.P.E.	HIGH DENSITY POLYETHYLENE
J.B.	JUNCTION BOX
M.H.	MANHOLE
N.S.	NARROW SLOT
P.V.C.	POLYVINYL CHLORIDE
R.C.	REINFORCED CONCRETE
T.B.D.I.	TRAFFIC BEARING DROP INLET
T.B.J.B.	TRAFFIC BEARING JUNCTION BOX
W.S.	WIDE SLOT

AP-5CG3383XN5

COMPUTED BY:	VHB	DATE:	11/25/2025
CHECKED BY:	VHB	DATE:	11/25/2025

NORTH CAROLINA DEPARTMENT OF TRANSPORTATION
DIVISION OF HIGHWAYS

PROJECT NO.	SHEET NO.
HL-0033	3D-3

Note: Invert Elevations indicated are for Bid Purposes only and shall not be used for project construction stakeout. See "Standard Specifications For Roads and Structures, Section 300-5".

LIST OF PIPES, ENDWALLS, ETC. (FOR PIPES 48 INCHES & UNDER)

LINE & STATION / SIZE / THICKNESS OR GAUGE	OFFSET	STRUCTURE NUMBER FROM	STRUCTURE NUMBER TO	TOP ELEVATION FT.	INVERT ELEVATION FT.	INVERT ELEVATION FT.	MINIMUM REQUIRED SLOPE %	Drainage Pipe (RCP, CSP, CAAP, HDPE, PVC, or PP PIPE) 12	15	18	24	DO NOT USE RCP	DO NOT USE CSP	DO NOT USE CAAP	DO NOT USE HDPE	DO NOT USE PVC	DO NOT USE PP PIPE	C. S. PIPE 12 .064	15 .064	18 .064	24 .064	R. C. PIPE CLASS III 12	15	18	24	30	R. C. PIPE CLASS IV 12	15	18	24	30	36	72	78	84		R. C. PIPE CLASS V 12	15	18	24	STRUCTURAL PLATE PIPE 60	66	72		
Y2 16+40	14 LT	0532		348.4																																									
		0532	0531		345.1	344.6																					60																	
Y2 21+36	28 LT	0534		348.9																																									
		0534	0535		345.7	345.3																					36																	
Y2 21+00	28 LT	0535		348.6																																									
		0535	0537		345.3	344.9																					76																	
Y2 20+27	57 LT	0536		347.1																																									
		0536	0537		344.6	343.8	0.3																								32													
Y2 20+25	28 LT	0537		348.3																																									
		0537	0538		342.0	337.2	0.4																								108													
Y1 18+40	34 LT	0539		350.1																																									
		0539	0504		346.9	346.3																					40																	
L 27+73	78 RT	0540		352.1																																									
		0540	0513		348.3	347.8	0.7																				28																	
Y2 22+05	38 RT	0541							20																																				
Y1 22+75	34 RT	0601		350.7																																									
		0601	0603		347.1	346.3																					136																	
Y1 23+50	36 LT	0602		350.0																																									
		0602	0608		346.7	346.0																					108																	
Y1 24+10	34 RT	0603		349.5																																									
		0603	0605		346.3	346.0																					48																	
Y1 24+54	80 RT	0604		348.5																																									
Y1 24+58	37 RT	0605		349.2																																									
		0605	0606		344.4	344.4																									8													
Y1 24+58	29 RT	0606		346.9																																									
Y1 24+58	28 LT	0607		346.7																																									
		0607	0608		344.2	344.2																									4													
Y1 24+58	32 LT	0608		349.2																																									
		0608	0610		344.1	344.0																									32													
Y1 24+71	38 RT	0609		349.3																																									
		0609	0605		346.0	345.9																					12																	
Y1 24+90	30 LT	0610		349.1																																									
Y2 12+74	28 RT	0701																																											
		0701	0702																							48																			
Y2 23+00	28 LT	0801		353.1																																									
		0801	0534		349.8	345.7																					164																	
Y2 24+21	30 RT	0802							20																																				
Y2 25+31	28 RT	0803							28																																				
Y2 25+95	26 RT	0804							32																																				
Y2 26+41	26 RT	0805							20																																				
Y2 21+62	13 LT	0000																																											
Y2 20+96	20 LT	0000																																											
Y2 20+61	13 LT	0000																																											
Y2 20+26	15 LT	0000																																											
Y2 20+26	23 LT	0000																																											
Y2 20+09	19 LT	0000																																											
Y2 19+91	25 LT	0000																																											
Y2 19+43	16 LT	0000																																											
Y2 17+86	13 LT	0000																																											
Y2 17+44	22 LT	0000																																											
						SHEET TOTALS			120																	48		708			184															

LINE & STATION / SIZE / THICKNESS OR GAUGE	### R.C. PIPE CULVERTS, CONTRACTOR DESIGN	15" SIDE DRAIN PIPE	18" SIDE DRAIN PIPE	24" SIDE DRAIN PIPE		ENDWALLS STD. 838.01 OR STD. 838.11 (UNLESS NOTED OTHERWISE) CY	REINFORCED ENDWALLS CY	DRAINAGE STRUCTURE MASONRY CY	QUANTITIES FOR DRAINAGE STRUCTURES (NOTE: TOTAL LIN. FT. FOR PAY QUANTITY SHALL BE A + (1.3 X B)) 0' THRU 5' EACH	A 5' THRU 10' LIN. FT.	B 10' AND ABOVE LIN. FT.	C.B. STD. 840.01 OR STD. 840.02	FRAME, GRATES, AND HOOD STD. 840.03 GRATE TYPE E	F	G	CONCRETE TRANSITIONAL SECTION D.I. STD. 852.04 OR STD. 852.06	C.B. STD. 852.05	OPEN THROAT C.B. STD. 840.04 OR STD. 840.05	CONCRETE BRIDGE APPROACH D.I. STD. 840.13	D.I. STD. 840.14 OR STD. 840.15	D.I. FRAME AND GRATES STD. 840.16	G.D.I. (N.S. SAG) FRAME W/ 2 GRATES STD. 840.24	G.D.I. (N.S. FLAT) FRAME W/ GRATE STD. 840.29	G.D.I. (N.S. FLAT) FRAME W/ 2 GRATES STD. 840.29	DRIVEWAY D.I. STD. 840.30	FRAME W/ GRATE FOR DRIVEWAY STD. 840.30	J.B. STD. 840.31 OR STD. 840.32	M.H. FRAME AND COVER STD. 840.54		CONVERT EXISTING J.B. TO D.I.	ADJUST C.B.	ADJUST D.I.		FLOWABLE FILL CY	CONCRETE COLLARS CL. "B" STD. 840.72 CY	CONCRETE AND BRICK PIPE PLUG STD. 840.71 CY	PIPE REMOVAL LIN. FT.	REMARKS
Y2 16+40									1			1			1																											
Y2 21+36									1			1		1																												
Y2 21+00									1			1		1																												
Y2 20+27																																										
Y2 20+25									1	1.3		1		1																												
Y1 18+40									1			1		1																												
L 27+73									1			1			1																											
Y2 22+05																																										
Y1 22+75									1			1		1																												
Y1 23+50									1			1			1																											
Y1 24+10									1			1		1																												
Y1 24+54																																										
Y1 24+58									1			1		1																												
Y1 24+58																																							0.6560			
Y1 24+58																																							0.6560			
Y1 24+58									1	0.1		1			1																											
Y1 24+71									1			1	1																													
Y1 24+90									1	0.1		1	1																													
Y2 12+74									1																			1	1													
Y2 23+00									1			1		1																												
Y2 24+21																																										
Y2 25+31																																										
Y2 25+95																																										
Y2 26+41																																										
Y2 21+62																																									128	
Y2 20+96																																									14	
Y2 20+61																																									68	
Y2 20+26																																									4	
Y2 20+26																																									10	
Y2 20+09																																									32	
Y2 19+91																																									9	
Y2 19+43																																									96	
Y2 17+86																																									80	
Y2 17+44																																									17	
SHEET TOTALS									15	1.5		14	2	8	4													1	1									1.3120		458	

ABBREVIATIONS

C.A.A.	CORRUGATED ALUMINIUM ALLOY
C.B.	CATCH BASIN
C.S.	CORRUGATED STEEL
D.I.	DROP INLET
G.D.I.	GRATED DROP INLET
H.D.P.E.	HIGH DENSITY POLYETHYLENE
J.B.	JUNCTION BOX
M.H.	MANHOLE
N.S.	NARROW SLOT
P.V.C.	POLYVINYL CHLORIDE
R.C.	REINFORCED CONCRETE
T.B.D.I.	TRAFFIC BEARING DROP INLET
T.B.J.B.	TRAFFIC BEARING JUNCTION BOX
W.S.	WIDE SLOT

AP-SCG3383XN5

COMPUTED BY:	VHB	DATE:	11/25/2025
CHECKED BY:	VHB	DATE:	11/25/2025

NORTH CAROLINA DEPARTMENT OF TRANSPORTATION
DIVISION OF HIGHWAYS

PROJECT NO.	SHEET NO.
HL-0033	3D-4

Note: Invert Elevations indicated are for Bid Purposes only and shall not be used for project construction stakeout. See "Standard Specifications For Roads and Structures, Section 300-5".

LIST OF PIPES, ENDWALLS, ETC. (FOR PIPES 48 INCHES & UNDER)

| LINE & STATION / SIZE / THICKNESS OR GAUGE | OFFSET | STRUCTURE NUMBER FROM | STRUCTURE NUMBER TO | TOP ELEVATION FT. | INVERT ELEVATION FT. | INVERT ELEVATION FT. | MINIMUM REQUIRED SLOPE % | Drainage Pipe (RCP, CSP, CAAP, HDPE, PVC, or PP PIPE) 12 | 15 | 18 | 24 | DO NOT USE RCP | DO NOT USE CSP | DO NOT USE CAAP | DO NOT USE HDPE | DO NOT USE PVC | DO NOT USE PP PIPE | C. S. PIPE 12 .064 | 15 .064 | 18 .064 | 24 .064 | R. C. PIPE CLASS III 12 | 15 | 18 | 24 | 30 | R. C. PIPE CLASS IV 12 | 15 | 18 | 24 | 30 | 36 | 72 | 78 | 84 | | R. C. PIPE CLASS V 12 | 15 | 18 | 24 | STRUCTURAL PLATE PIPE 60 | 66 | 72 | | | ### R.C. PIPE CULVERTS, CONTRACTOR DESIGN | 15" SIDE DRAIN PIPE | 18" SIDE DRAIN PIPE | 24" SIDE DRAIN PIPE | | ENDWALLS STD. 838.01 OR STD. 838.11 (UNLESS NOTED OTHERWISE) CY | REINFORCED ENDWALLS CY | DRAINAGE STRUCTURE MASONRY CY | QUANTITIES FOR DRAINAGE STRUCTURES (NOTE: TOTAL LIN. FT. FOR PAY QUANTITY SHALL BE A + (1.3 X B)) 0' THRU 5' EACH | A 5' THRU 10' LIN. FT. | B 10' AND ABOVE LIN. FT. | C.B. STD. 840.01 OR STD. 840.02 | FRAME, GRATES, AND HOOD STD. 840.03 GRATE TYPE E | F | G | CONCRETE TRANSITIONAL SECTION D.I. STD. 852.04 OR STD. 852.06 | C.B. STD. 852.05 | OPEN THROAT C.B. STD. 840.04 OR STD. 840.05 | CONCRETE BRIDGE APPROACH D.I. STD. 840.13 | D.I. STD. 840.14 OR STD. 840.15 | D.I. FRAME AND GRATES STD. 840.16 | G.D.I. (N.S. SAG) FRAME W/ 2 GRATES STD. 840.24 | G.D.I. (N.S. FLAT) FRAME W/ GRATE STD. 840.29 | G.D.I. (N.S. FLAT) FRAME W/ 2 GRATES STD. 840.29 | DRIVEWAY D.I. STD. 840.30 | FRAME W/ GRATE FOR DRIVEWAY STD. 840.30 | J.B. STD. 840.31 OR STD. 840.32 | M.H. FRAME AND COVER STD. 840.54 | | CONVERT EXISTING J.B. TO D.I. | ADJUST C.B. | ADJUST D.I. | | | FLOWABLE FILL CY | CONCRETE COLLARS CL. "B" STD. 840.72 CY | CONCRETE AND BRICK PIPE PLUG STD. 840.71 CY | PIPE REMOVAL LIN. FT. | REMARKS |
|---|---|---|---

Z11255

COMPUTED BY:	VHB	DATE:	9/30/2025
CHECKED BY:	VHB	DATE:	9/30/2025

NORTH CAROLINA DEPARTMENT OF TRANSPORTATION
DIVISION OF HIGHWAYS

PROJECT NO.	SHEET NO.
HL-0033	3D-5

Note: Invert Elevations indicated are for Bid Purposes only and shall not be used for project construction stakeout. See "Standard Specifications For Roads and Structures, Section 300-5".

LIST OF PIPES, ENDWALLS, ETC. (FOR PIPES 54 INCHES & OVER)

| LINE & STATION / SIZE / THICKNESS OR GAUGE | OFFSET | STRUCTURE NUMBER FROM | STRUCTURE NUMBER TO | TOP ELEVATION FT. | INVERT ELEVATION FT. | INVERT ELEVATION FT. | MINIMUM REQUIRED SLOPE % | Drainage Pipe (RCP, CSP, CAAP, HDPE, PVC, or PP PIPE) 12 | 15 | 18 | 24 | DO NOT USE RCP | DO NOT USE CSP | DO NOT USE CAAP | DO NOT USE HDPE | DO NOT USE PVC | DO NOT USE PP PIPE | C. S. PIPE 12 .064 | 15 .064 | 18 .064 | 24 .064 | R. C. PIPE CLASS III 12 | 15 | 18 | 24 | R. C. PIPE CLASS IV 12 | 15 | 18 | 24 | 30 | 36 | 42 | 48 | 54 | 60 | 66 | 72 | 78 | 84 | R. C. PIPE CLASS V 12 | 15 | 18 | 24 | STRUCTURAL PLATE PIPE 60 | 66 | 72 | | | ENDWALLS STD. 838.01 OR STD. 838.11 (UNLESS NOTED OTHERWISE) CY | REINFORCED ENDWALLS CY | DRAINAGE STRUCTURE MASONRY CY | QUANTITIES FOR DRAINAGE STRUCTURES NOTE: TOTAL LIN. FT. FOR PAY QUANTITY SHALL BE A + (1.3 X B) 0' THRU 5' EACH | A 5' THRU 10' LIN. FT. | B 10' AND ABOVE LIN. FT. | C.B. STD. 840.01 OR STD. 840.02 | FRAME, GRATES, AND HOOD STD. 840.03 GRATE TYPE E | F | G | CONCRETE TRANSITIONAL SECTION D.I. STD. 852.04 OR STD. 852.06 | C.B. STD. 852.05 | OPEN THROAT C.B. STD. 840.04 OR STD. 840.05 | CONCRETE BRIDGE APPROACH D.I. STD. 840.13 | D.I. STD. 840.14 OR STD. 840.15 | D.I. FRAME AND GRATES STD. 840.16 | G.D.I. TYPE "A" STD. 840.17 OR STD. 840.26 | G.D.I. TYPE "B" STD. 840.18 OR STD. 840.27 | G.D.I. TYPE "D" STD. 840.19 OR STD. 840.28 | G.D.I. (W.S. FLAT) FRAME WITH GRATE STD. 840.20 | G.D.I. (W.S. FLAT) FRAME W/ 2 GRATES STD. 840.20 | G.D.I. (W.S. SAG) FRAME W/ GRATE STD. 840.22 | G.D.I. (W.S. SAG) FRAME W/ 2 GRATES STD. 840.22 | G.D.I. (N.S. SAG) FRAME W/ GRATE STD. 840.24 | G.D.I. (N.S. SAG) FRAME W/ 2 GRATES STD. 840.24 | T.B.D.I. FOR STEEL GRATES STD. 840.36 | STEEL FRAME WITH TWO GRATES STD. 840.37 | TEMP STEEL PLATE COVER MASONRY DRAINAGE | ##" SPRING BOX PIPE | FLOWABLE FILL CY | CONCRETE COLLARS CL. "B" STD. 840.72 CY | CONCRETE AND BRICK PIPE PLUG STD. 840.71 CY | PIPE REMOVAL LIN. FT. | REMARKS |
|---|---|---|---

SUMMARY OF SUBSURFACE DRAINAGE

LINE	STATION	STATION	LOCATION LT/RT/CL	DRAINAGE TYPE* UD/BD/SD	LF
–L–	15+00.00	17+00.00	LT & RT	SD	500
CONTINGENCY				SD	200
				TOTAL LF:	700

*UD = Underdrain
*BD = Blind Drain
*SD = Subsurface Drain

SUMMARY OF AGGREGATE SUBGRADE /STABILIZATION

LOCATION	STATION	STATION	AGGREGATE TYPE* ASU/AST	AGGREGATE THICKNESS INCHES	SHALLOW UNDERCUT CY	CLASS IV SUBGRADE STABILIZATION TONS	GEOTEXTILE FOR SUBGRADE STABILIZATION SY	STABILIZER AGGREGATE TONS	CLASS IV AGGREGATE STABILIZATION TONS
CONTINGENCY			ASU		100	200	300		
			TOTAL CY/TONS/SY		100	200	300 **		

*ASU=Aggregate Subgrade
*AST=Aggregate Stabilization
**Total square yards of "Geotextile for Subgrade Stabilization" is only the estimated quantity for ASU/AST and may only represent a portion of the geotextile quantity shown in the Item Sheets of the Proposal.

PARCEL INDEX

PARCEL NO.	SHEET NO.	PROPERTY OWNER NAME
1	4	THE TERRACES AT TOWN HALL COMMONS OWNERS ASSN INC
2	4	THE TERRACES AT TOWN HALL COMMONS OWNERS ASSN INC
3	4	TOWN OF MORRISVILLE
4	4	TOWN OF MORRISVILLE
5	4	TOWN OF MORRISVILLE
6	4	TOWN HALL COMMONS PROPERTY OWNERS ASSN INC
7	4	THANIGAIVEL RANGARAJAN & VISHNU PRIYA THANIGAIVEL RANGARAJAN
8	4	CHRISTOPHER W. HUMPHRES & MICHELLE ROGERS HUMPHRES
9	4	CLARK D. HARTER EMILY J. HARTER
10	4	JUDITH SPRINGER & ERIN A. SPRINGER
11	4	EDWARD B. MONEY & MONICA L. MONEY
12	4, 5	ETNS PROPERTY LLC
13	4, 5	JAIDEV P. RAO & SANDHYA RAO
14	4, 5	SAMEER S. GOTKHINDIKAR
15	4, 5	GREGORY KENDAL HARRELL & MARINA E. HARRELL
16Z	5, 6, 8	WAKE COUNTY BOARD OF EDUCATION
17Z	5, 7	LAURA HOLLAND UZZELL FOUNDATION
18	5	CHARLIE MAYO
19	5	TOWN HALL COMMONS PROPERTY OWNERS ASSN INC
20	4, 5	JENICA DAVIDSON & RYAN DAVIDSON
21	4, 5	SEBASTIAN SHIPP AND WIFE SANDRA C. SHIPP
22	5, 6	ANJAN MARELLA & PADMAJA MARELLA
23	6	DAVID D. ELLISON AND WIFE MEGAN D. ELLISON
24	6	ABRAHAM J. KATUMKEERYIL AND WIFE ELSIE KATUMKEERYIL ABRAHAM
25	6	OSIRIS I. PENA AND WENDY FAMILIA PENA
26	7	AMFP IV WATERFORD LLC
27	5, 7	HELEN MARSHBURN
28	5, 7	ROBERT G. MARSHBURN AND WIFE BETTY MARSHBURN
29	5	OTTO C. LYONS
30	5, 8	MARTHA HICKS BRANDON
31	5, 8	ROBERT LEE PENNINGTON
32	8	SYLVESTER K. HARRINGTON
35	8	OTTO C. LYONS

Docusign Envelope ID: 16D12275-C3FB-4587-A3A9-DD2548766595

8/17/99

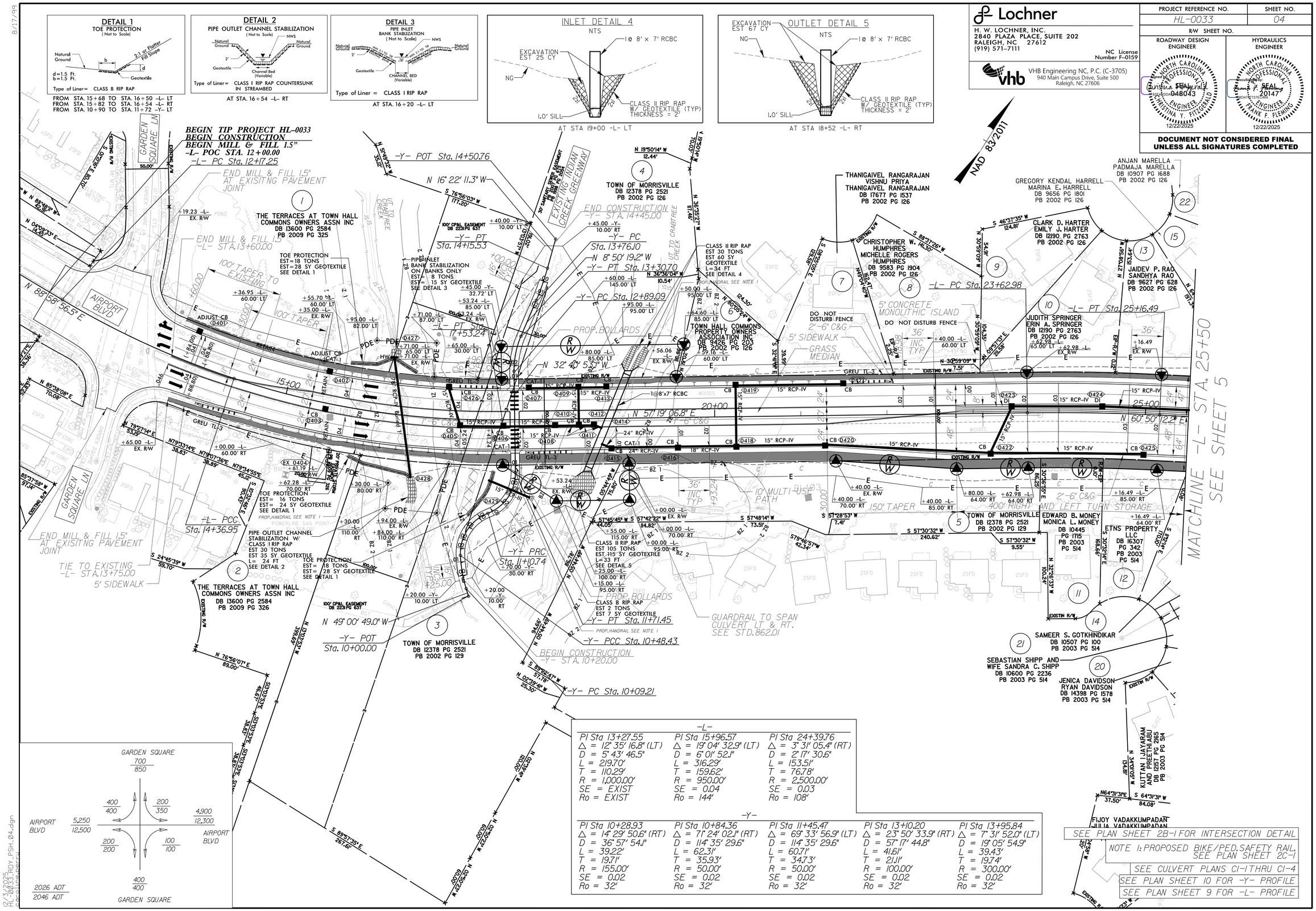

-L-

PI Sta 13+27.55	PI Sta 15+96.57	PI Sta 24+39.76
△ = 12° 35' 16.8" (LT)	△ = 19° 04' 32.9" (LT)	△ = 3° 31' 05.4" (RT)
D = 5° 43' 46.5"	D = 6° 01' 52.1"	D = 2° 17' 30.6"
L = 219.70'	L = 316.29'	L = 153.51'
T = 110.29'	T = 159.62'	T = 76.78'
R = 1,000.00'	R = 950.00'	R = 2,500.00'
SE = EXIST	SE = 0.04	SE = 0.03
Ro = EXIST	Ro = 144'	Ro = 108'

-Y-

PI Sta 10+28.93	PI Sta 10+84.36	PI Sta 11+45.47	PI Sta 13+10.20	PI Sta 13+95.84
△ = 14° 29' 50.6" (RT)	△ = 71° 24' 02.1" (RT)	△ = 69° 33' 56.9" (LT)	△ = 23° 50' 33.9" (RT)	△ = 7° 31' 52.0" (LT)
D = 36° 57' 54.1"	D = 114° 35' 29.6"	D = 114° 35' 29.6"	D = 57° 17' 44.8"	D = 19° 05' 54.9"
L = 39.22'	L = 62.31'	L = 60.71'	L = 41.61'	L = 39.43'
T = 19.71'	T = 35.93'	T = 34.73'	T = 21.11'	T = 19.74'
R = 155.00'	R = 50.00'	R = 50.00'	R = 100.00'	R = 300.00'
SE = 0.02	SE = 0.02	SE = 0.02	SE = 0.02	SE = 0.02
Ro = 32'	Ro = 32'	Ro = 32'	Ro = 32'	Ro = 32'

SEE PLAN SHEET 2B-1 FOR INTERSECTION DETAIL

NOTE 1: PROPOSED BIKE/PED. SAFETY RAIL. SEE PLAN SHEET 2C-1

SEE CULVERT PLANS C1-1 THRU C1-4

SEE PLAN SHEET 10 FOR -Y- PROFILE

SEE PLAN SHEET 9 FOR -L- PROFILE

Docusign Envelope ID: 16D12275-C3FB-4587-A3A9-DD2548766595

NOTE: ADJUST TO BE FLUSH WITH FINAL SURFACE COURSE ELEVATION

8/17/99

Lochner
H. W. LOCHNER, INC.
2840 PLAZA PLACE, SUITE 202
RALEIGH, NC 27612
(919) 571-7111
NC License Number F-0159

VHB Engineering NC, P.C. (C-3705)
940 Main Campus Drive, Suite 500
Raleigh, NC 27606

PROJECT REFERENCE NO.	SHEET NO.
HL-0033	05
R/W SHEET NO.	

ROADWAY DESIGN ENGINEER
NORTH CAROLINA PROFESSIONAL SEAL 048043 ENGINEER CRISTINA Y. FITZGERALD
DocuSigned by: Cristina Fitzgerald
12/22/2025

HYDRAULICS ENGINEER
NORTH CAROLINA PROFESSIONAL SEAL 20147 ENGINEER FRANK F. FLEMING
DocuSigned by: Frank F. Fleming
12/22/2025

DOCUMENT NOT CONSIDERED FINAL UNLESS ALL SIGNATURES COMPLETED

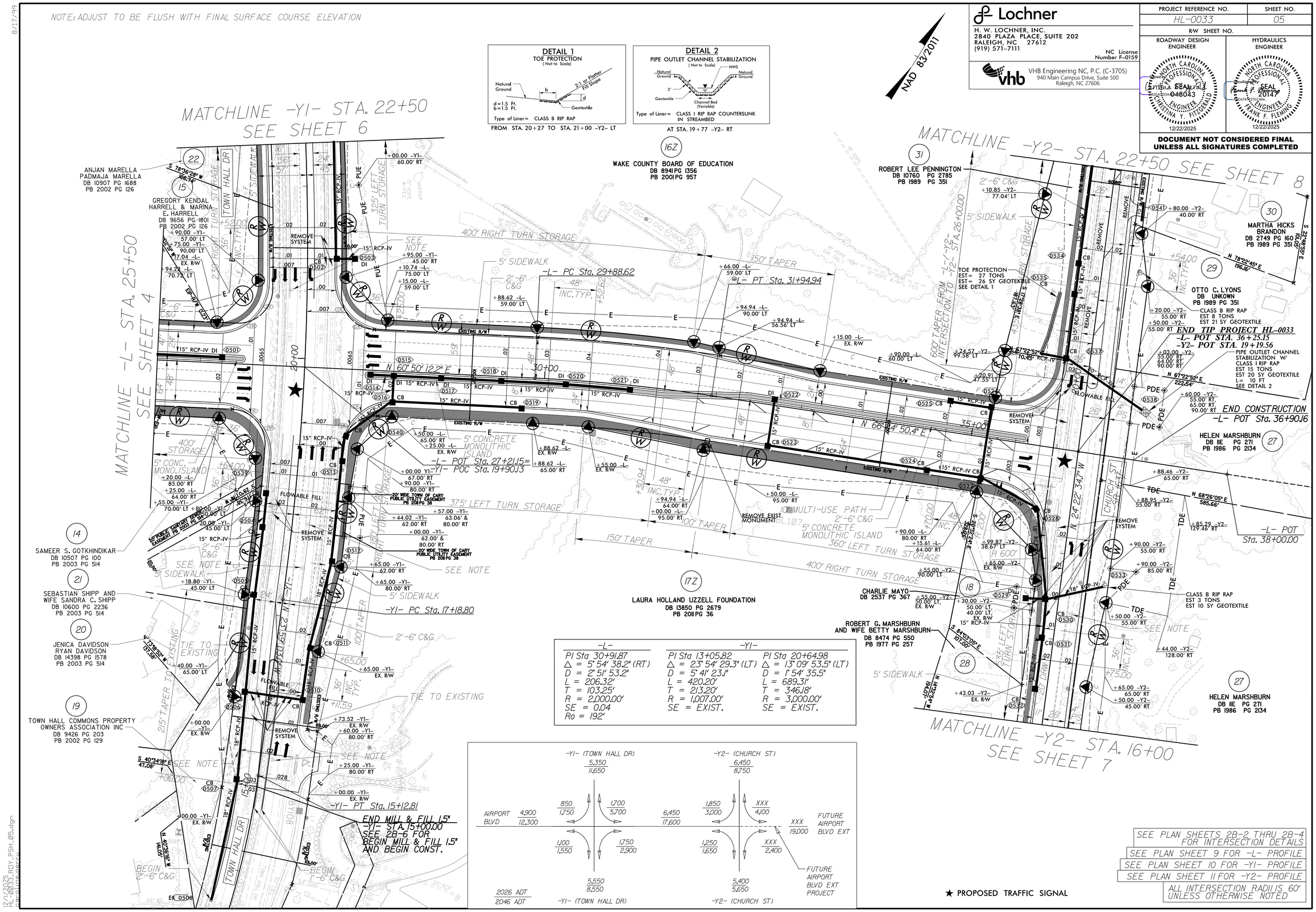

-L-	-Y1-	-Y2-
PI Sta 30+91.87	PI Sta 13+05.82	PI Sta 20+64.98
Δ = 5° 54' 38.2" (RT)	Δ = 23° 54' 29.3" (LT)	Δ = 13° 09' 53.5" (LT)
D = 2° 51' 53.2"	D = 5° 41' 23.1"	D = 1° 54' 35.5"
L = 206.32'	L = 420.20'	L = 689.31'
T = 103.25'	T = 213.20'	T = 346.18'
R = 2,000.00'	R = 1,007.00'	R = 3,000.00'
SE = 0.04	SE = EXIST.	SE = EXIST.
Ro = 192'		

SEE PLAN SHEETS 2B-2 THRU 2B-4 FOR INTERSECTION DETAILS
SEE PLAN SHEET 9 FOR -L- PROFILE
SEE PLAN SHEET 10 FOR -Y1- PROFILE
SEE PLAN SHEET 11 FOR -Y2- PROFILE
ALL INTERSECTION RADII IS 60' UNLESS OTHERWISE NOTED

12/1/2025
HL-0033_RDY_PSH_05.dgn

Docusign Envelope ID: 16D12275-C3FB-4587-A3A9-DD2548766595

8/17/99

NOTE: ADJUST TO BE FLUSH WITH FINAL SURFACE COURSE ELEVATION

Lochner
H. W. LOCHNER, INC.
2840 PLAZA PLACE, SUITE 202
RALEIGH, NC 27612
(919) 571-7111
NC License Number F-0159

vhb
VHB Engineering NC, P.C. (C-3705)
940 Main Campus Drive, Suite 500
Raleigh, NC 27606

PROJECT REFERENCE NO.	SHEET NO.
HL-0033	06
R/W SHEET NO.	

ROADWAY DESIGN ENGINEER
NORTH CAROLINA PROFESSIONAL SEAL 048043 ENGINEER CHRISTINA Y. FITZGERALD
DocuSigned by: Christina Y. Fitzgerald
12/22/2025

HYDRAULICS ENGINEER
NORTH CAROLINA PROFESSIONAL SEAL 20147 ENGINEER FRANK F. FLEMING
DocuSigned by: Frank F. Fleming
12/22/2025

DOCUMENT NOT CONSIDERED FINAL UNLESS ALL SIGNATURES COMPLETED

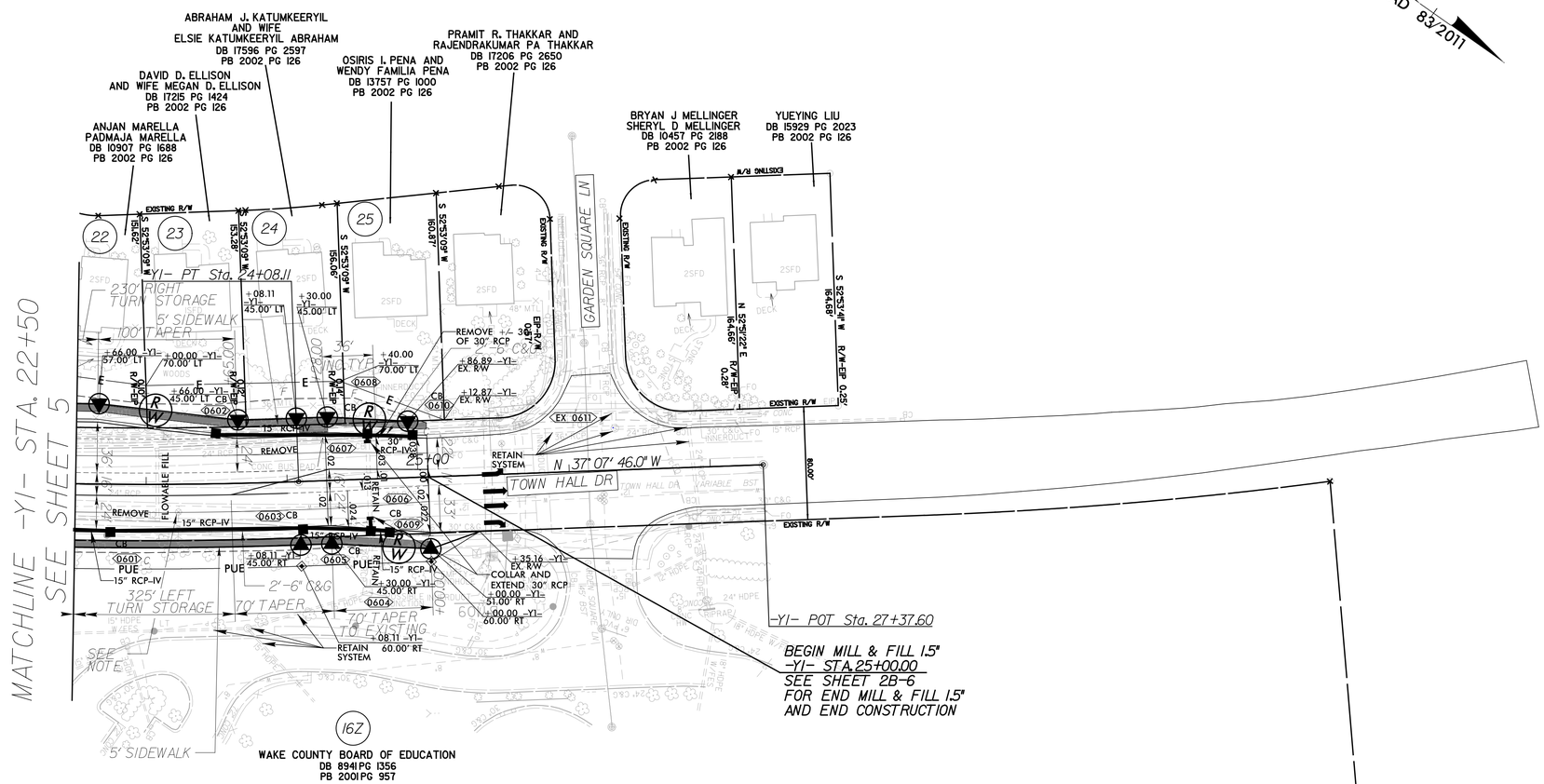

SEE PLAN SHEET 10 FOR -Y1- PROFILE

12/1/2025
HL-0033_RDY_PSH_06.dgn

Docusign Envelope ID: 16D12275-C3FB-4587-A3A9-DD2548766595

8/17/99

Lochner
H. W. LOCHNER, INC.
2840 PLAZA PLACE, SUITE 202
RALEIGH, NC 27612
(919) 571-7111
NC License Number F-0159

VHB Engineering NC, P.C. (C-3705)
940 Main Campus Drive, Suite 500
Raleigh, NC 27606

PROJECT REFERENCE NO.	SHEET NO.
HL-0033	07
R/W SHEET NO.	

ROADWAY DESIGN ENGINEER
NORTH CAROLINA PROFESSIONAL SEAL 048043 ENGINEER CHRISTINA Y. FITZGERALD
DocuSigned by: Christina Y. Fitzgerald
12/22/2025

HYDRAULICS ENGINEER
NORTH CAROLINA PROFESSIONAL SEAL 20147 ENGINEER FRANK F. FLEMING
DocuSigned by: Frank F. Fleming
B0D4F8727EC4B4...
12/22/2025

DOCUMENT NOT CONSIDERED FINAL UNLESS ALL SIGNATURES COMPLETED

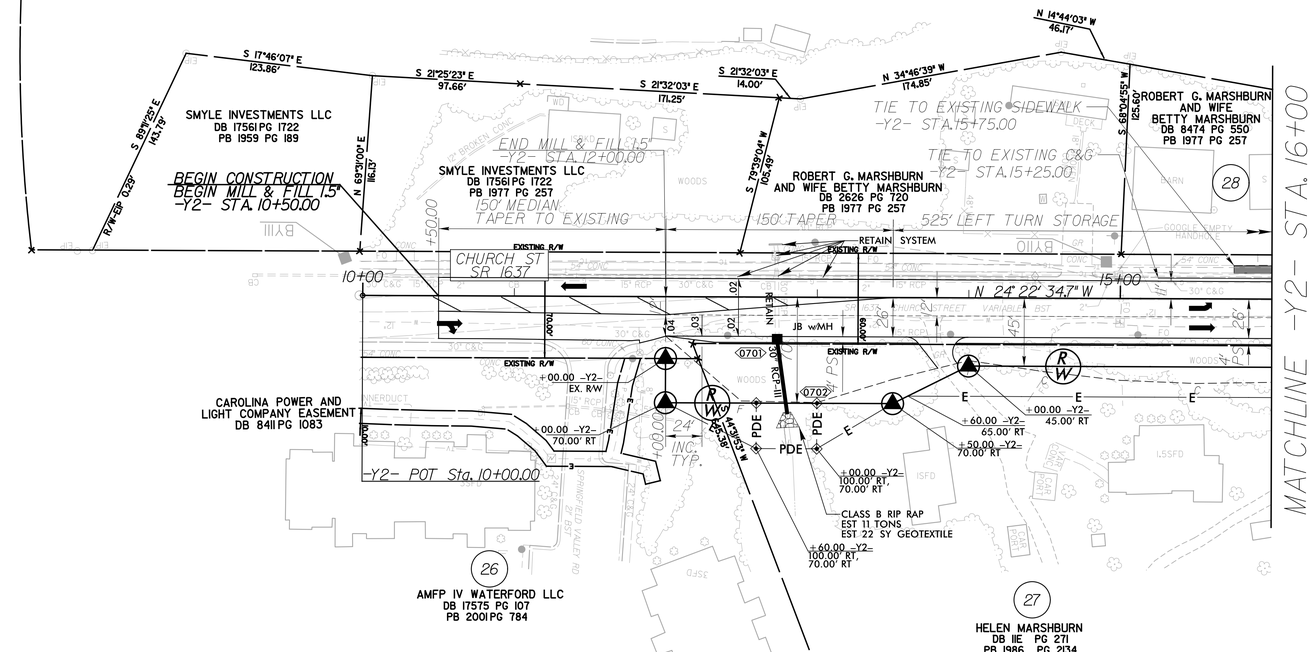

NOTE: ALL DRIVE RADII ARE 10' UNLESS OTHERWISE NOTED

SEE PLAN SHEET 11 FOR -Y2- PROFILE

12/1/2025
HL-0033_RDY_PSH_07.dgn

Docusign Envelope ID: 16D12275-C3FB-4587-A3A9-DD2548766595

8/17/99

-Y2-
PI Sta. 25+78.03
△ = 1° 53' 34.2" (LT)
D = 0° 58' 35.7"
L = 193.82'
T = 96.92'
R = 5,867.00'
SE = EXIST.

DETAIL 6
SPECIAL CUT DITCH
(Not to Scale)

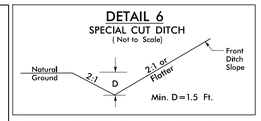

FROM STA. 23+00 TO STA. 27+00 -Y2- RT

Lochner
H. W. LOCHNER, INC.
2840 PLAZA PLACE, SUITE 202
RALEIGH, NC 27612
(919) 571-7111
NC License Number F-0159

vhb
VHB Engineering NC, P.C. (C-3705)
940 Main Campus Drive, Suite 500
Raleigh, NC 27606

PROJECT REFERENCE NO.	SHEET NO.
HL-0033	08
R/W SHEET NO.	

ROADWAY DESIGN ENGINEER
NORTH CAROLINA PROFESSIONAL ENGINEER SEAL 048043 CHRISTINA Y. FITZGERALD
Signed by: Christina Y. Fitzgerald
DocuSigned by: 0D4782727E3C486...
12/22/2025

HYDRAULICS ENGINEER
NORTH CAROLINA PROFESSIONAL ENGINEER SEAL 20147 FRANK F. FLEMING
DocuSigned by: Frank F. Fleming
0D4782727E3C486...
12/22/2025

DOCUMENT NOT CONSIDERED FINAL UNLESS ALL SIGNATURES COMPLETED

NAD 83/2011

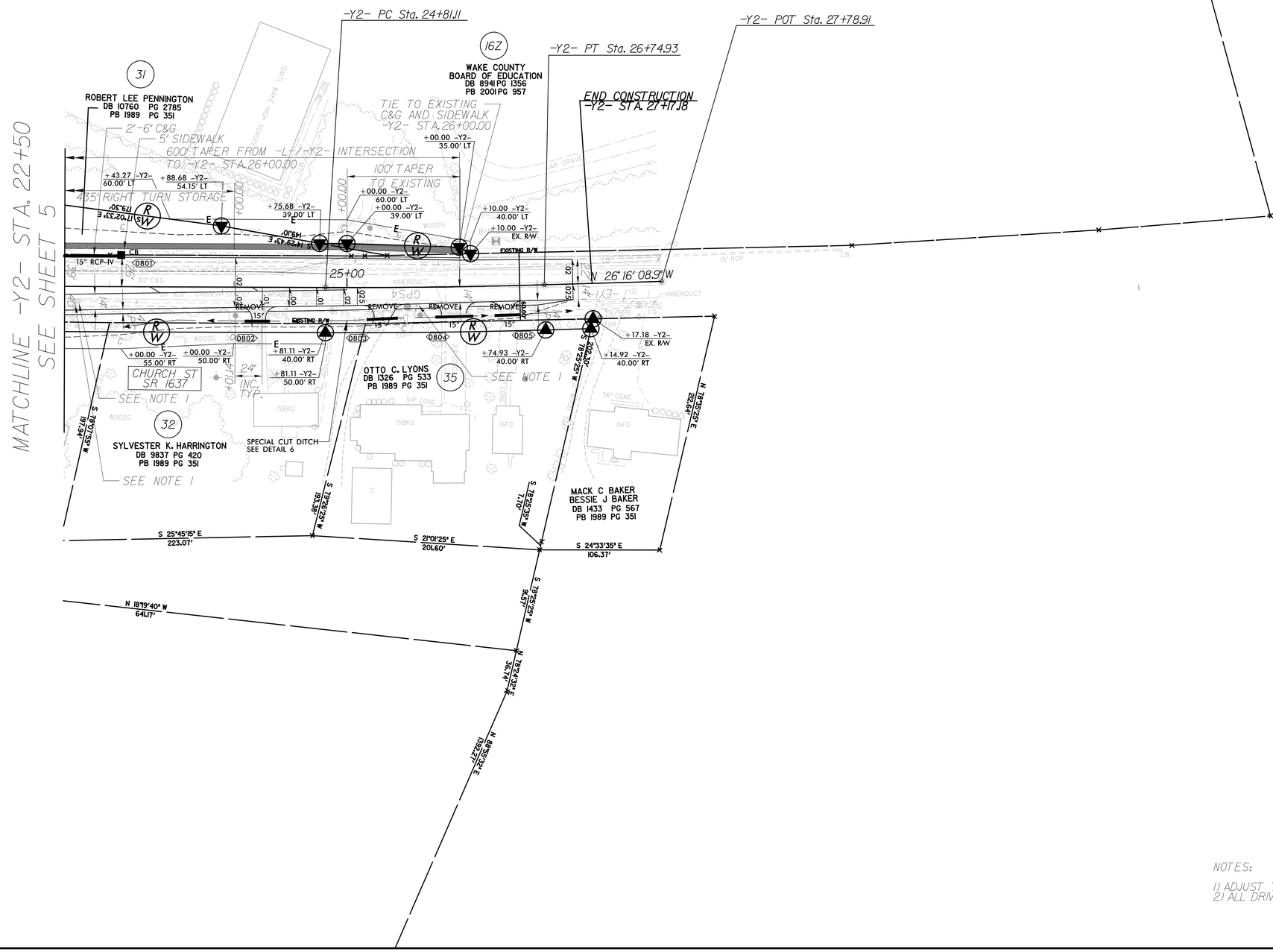

NOTES:

1) ADJUST TO BE FLUSH WITH FINAL SURFACE COURSE ELEVATION
2) ALL DRIVE RADII ARE 10' UNLESS OTHERWISE NOTED

SEE PLAN SHEET 11 FOR -Y2- PROFILE

12/1/2025
HL-0033_RDY_PSH_08.dgn

Docusign Envelope ID: 16D12275-C3FB-4587-A3A9-DD2548766595

5/28/99

Lochner
H. W. LOCHNER, INC.
2840 PLAZA PLACE, SUITE 202
RALEIGH, NC 27612
(919) 571-7111
NC License Number F-0159

vhb
VHB Engineering NC, P.C. (C-3705)
940 Main Campus Drive, Suite 500
Raleigh, NC 27606

PROJECT REFERENCE NO.	SHEET NO.
HL-0033	09

ROADWAY DESIGN ENGINEER
NORTH CAROLINA PROFESSIONAL ENGINEER SEAL 048043 CHRISTINA Y. FITZGERALD
Christina Y. Fitzgerald
12/22/2025

HYDRAULICS ENGINEER
NORTH CAROLINA PROFESSIONAL ENGINEER SEAL 20147 FRANK F. FLEMING
Frank F. Fleming
12/22/2025

DOCUMENT NOT CONSIDERED FINAL UNLESS ALL SIGNATURES COMPLETED

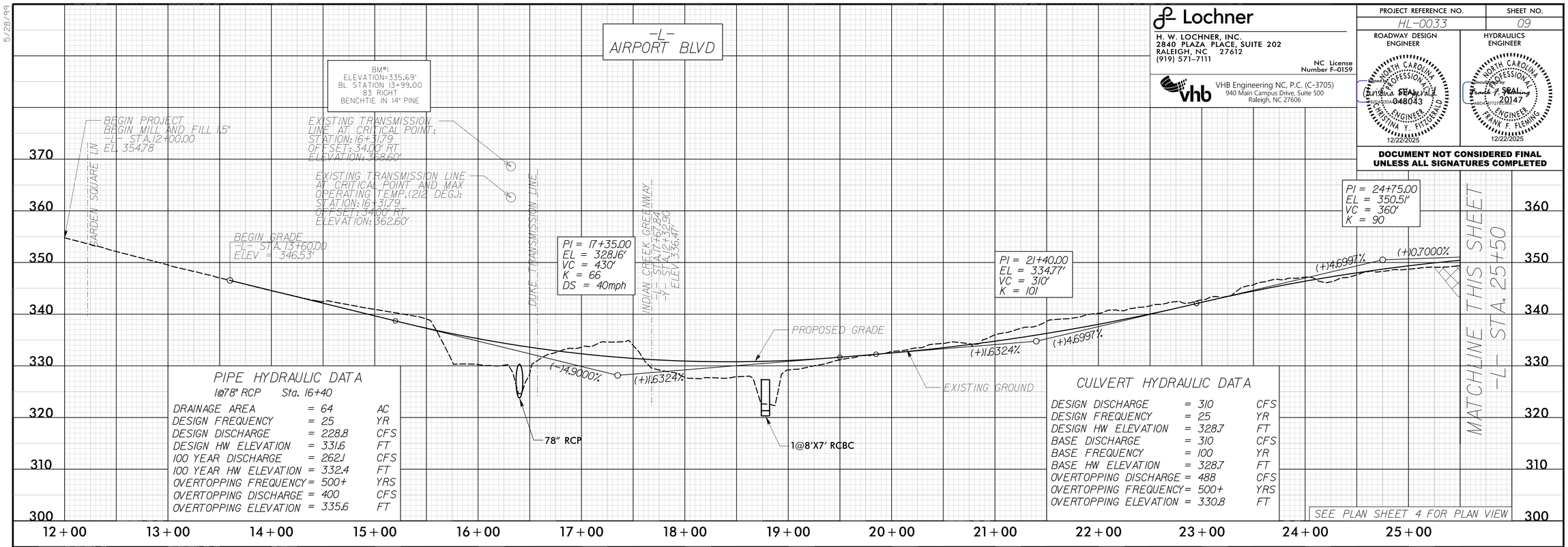

PIPE HYDRAULIC DATA

1@78" RCP Sta. 16+40

DRAINAGE AREA	= 64	AC
DESIGN FREQUENCY	= 25	YR
DESIGN DISCHARGE	= 228.8	CFS
DESIGN HW ELEVATION	= 331.6	FT
100 YEAR DISCHARGE	= 262.1	CFS
100 YEAR HW ELEVATION	= 332.4	FT
OVERTOPPING FREQUENCY	= 500+	YRS
OVERTOPPING DISCHARGE	= 400	CFS
OVERTOPPING ELEVATION	= 335.6	FT

CULVERT HYDRAULIC DATA

DESIGN DISCHARGE	= 310	CFS
DESIGN FREQUENCY	= 25	YR
DESIGN HW ELEVATION	= 328.7	FT
BASE DISCHARGE	= 310	CFS
BASE FREQUENCY	= 100	YR
BASE HW ELEVATION	= 328.7	FT
OVERTOPPING DISCHARGE	= 488	CFS
OVERTOPPING FREQUENCY	= 500+	YRS
OVERTOPPING ELEVATION	= 330.8	FT

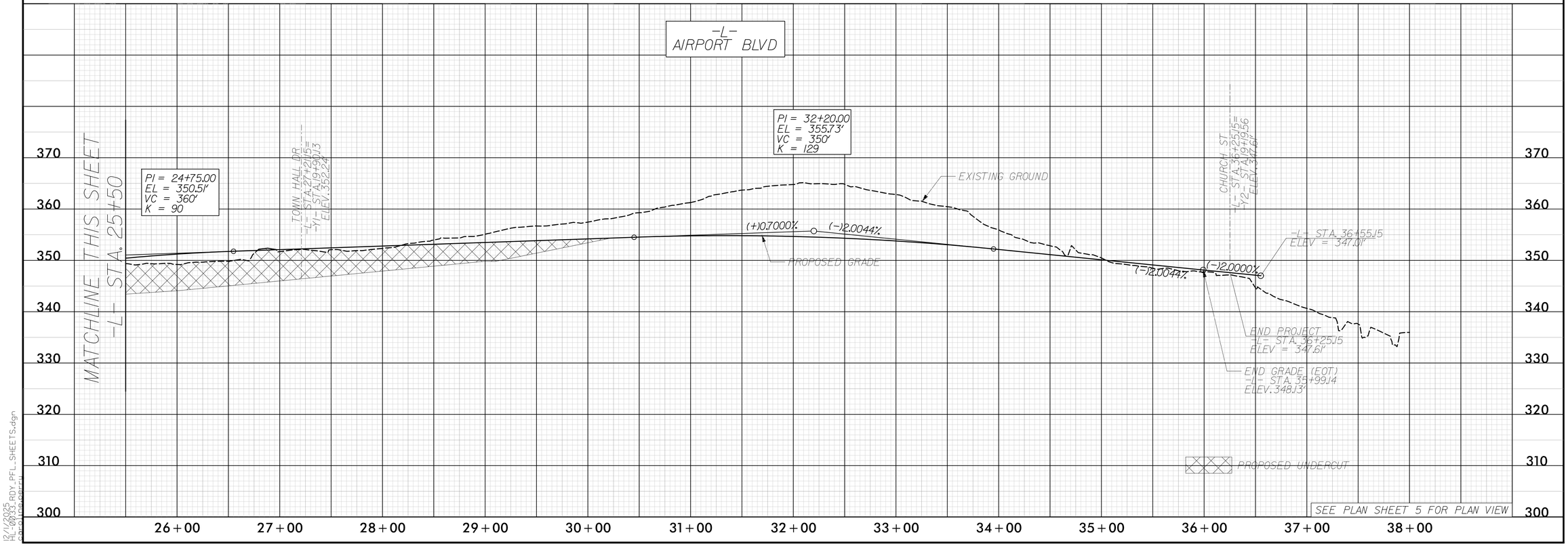

12/1/2025
HL-0033_RDY_PFL_SHEETS.dgn

Docusign Envelope ID: 16D12275-C3FB-4587-A3A9-DD2548766595

5/28/99

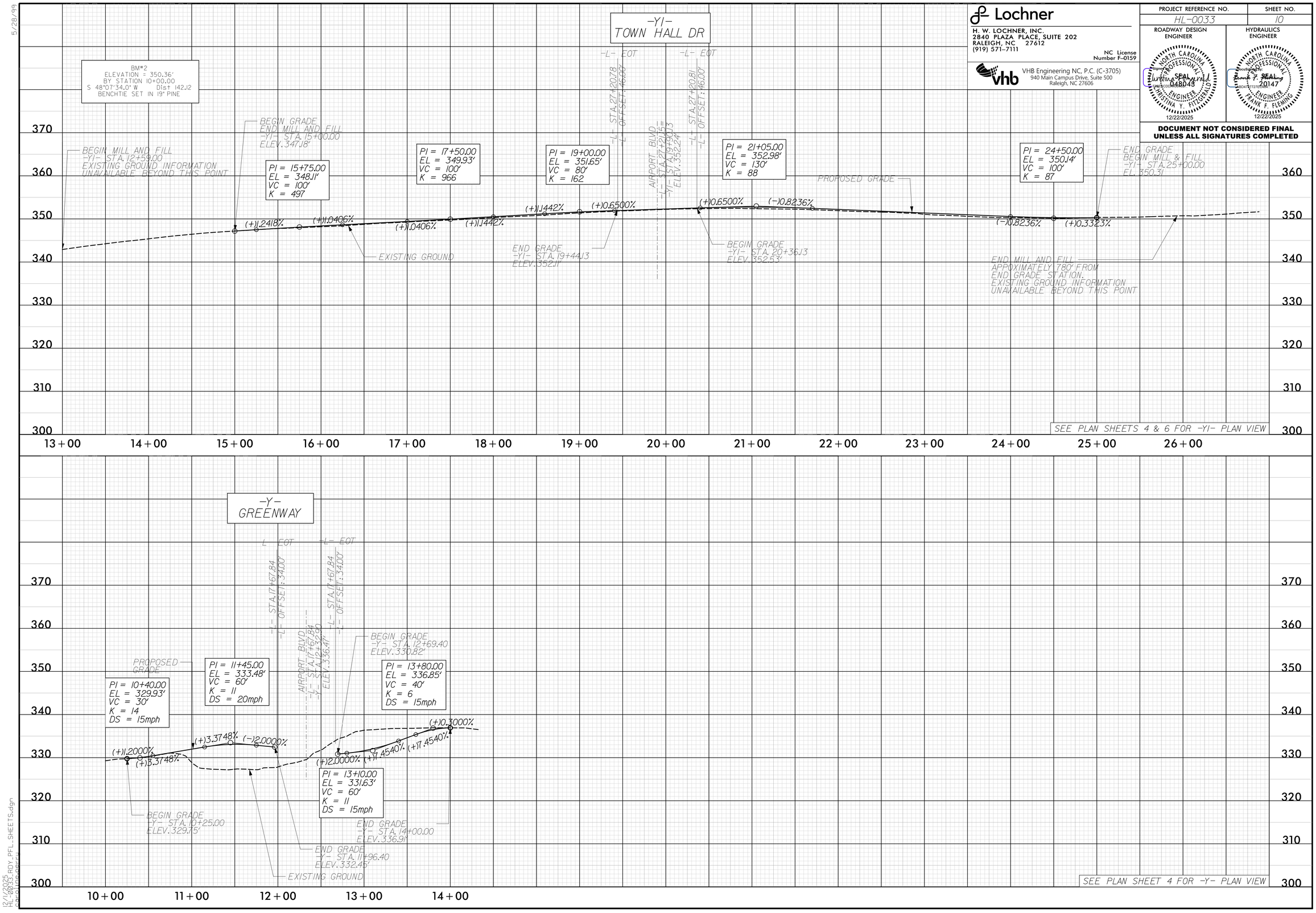

Lochner
H. W. LOCHNER, INC.
2840 PLAZA PLACE, SUITE 202
RALEIGH, NC 27612
(919) 571-7111
NC License Number F-0159

vhb
VHB Engineering NC, P.C. (C-3705)
940 Main Campus Drive, Suite 500
Raleigh, NC 27606

PROJECT REFERENCE NO.	SHEET NO.
HL-0033	10

ROADWAY DESIGN ENGINEER	HYDRAULICS ENGINEER
Christina Y. Fitzgerald	Frank F. Fleming
048043	20147
12/22/2025	12/22/2025

DOCUMENT NOT CONSIDERED FINAL UNLESS ALL SIGNATURES COMPLETED

12/1/2025
HL-0033_RDY_PFL_SHEETS.dgn

Docusign Envelope ID: 16D12275-C3FB-4587-A3A9-DD2548766595

5/28/99

Lochner
H. W. LOCHNER, INC.
2840 PLAZA PLACE, SUITE 202
RALEIGH, NC 27612
(919) 571-7111
NC License Number F-0159

vhb
VHB Engineering NC, P.C. (C-3705)
940 Main Campus Drive, Suite 500
Raleigh, NC 27606

PROJECT REFERENCE NO.	SHEET NO.
HL-0033	11

ROADWAY DESIGN ENGINEER
Docusign Envelope ID: 0D0478E7-27FC-4B7C-B7A1-D7A7A7A7A7A7
Christina Y. Fitzgerald
Signature
NORTH CAROLINA PROFESSIONAL SEAL 048043 ENGINEER CHRISTINA Y. FITZGERALD
12/22/2025

HYDRAULICS ENGINEER
Docusign Envelope ID: 0D0478E7-27FC-4B7C-B7A1-D7A7A7A7A7A7
Frank F. Fleming
Signature
NORTH CAROLINA PROFESSIONAL SEAL 20147 ENGINEER FRANK F. FLEMING
12/22/2025

DOCUMENT NOT CONSIDERED FINAL UNLESS ALL SIGNATURES COMPLETED

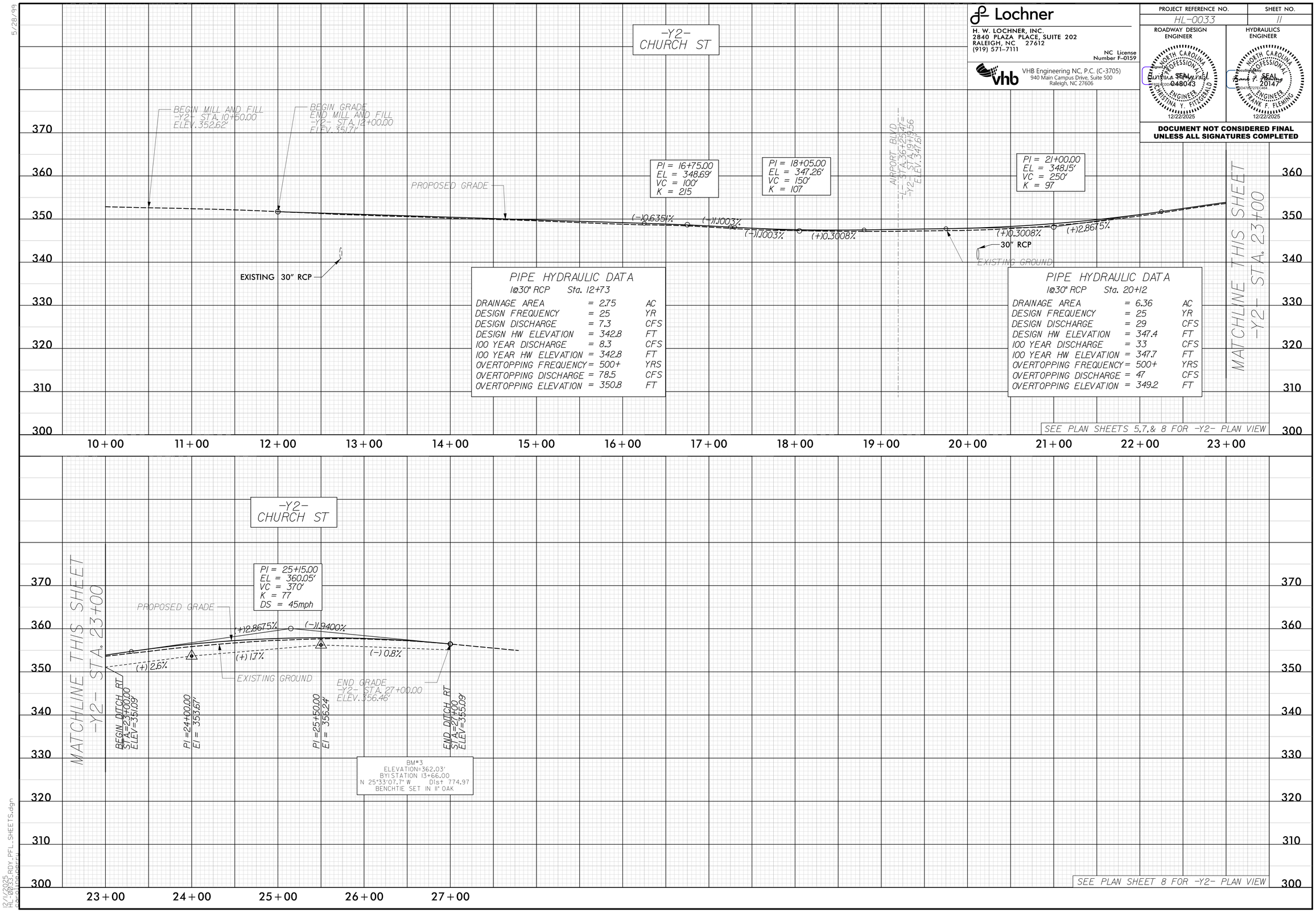

PIPE HYDRAULIC DATA
1@30" RCP Sta. 12+73

DRAINAGE AREA	= 2.75	AC
DESIGN FREQUENCY	= 25	YR
DESIGN DISCHARGE	= 7.3	CFS
DESIGN HW ELEVATION	= 342.8	FT
100 YEAR DISCHARGE	= 8.3	CFS
100 YEAR HW ELEVATION	= 342.8	FT
OVERTOPPING FREQUENCY	= 500+	YRS
OVERTOPPING DISCHARGE	= 78.5	CFS
OVERTOPPING ELEVATION	= 350.8	FT

PIPE HYDRAULIC DATA
1@30" RCP Sta. 20+12

DRAINAGE AREA	= 6.36	AC
DESIGN FREQUENCY	= 25	YR
DESIGN DISCHARGE	= 29	CFS
DESIGN HW ELEVATION	= 347.4	FT
100 YEAR DISCHARGE	= 33	CFS
100 YEAR HW ELEVATION	= 347.7	FT
OVERTOPPING FREQUENCY	= 500+	YRS
OVERTOPPING DISCHARGE	= 47	CFS
OVERTOPPING ELEVATION	= 349.2	FT

12/1/2025
HL-0033_RDY_PFL_SHEETS.dgn