TIP PROJECT: I-6001

CONTRACT: C205088

STATE	STATE PROJECT REFERENCE NO.	SHEET NO.	TOTAL SHEETS
N.C.	I-6001	EC-1	

STATE PROJ. NO.	F.A. PROJ. NO.	DESCRIPTION
47956.1.1	1003186	PE
47956.3.1	1003186	CONST.

STATE OF NORTH CAROLINA

DIVISION OF HIGHWAYS

PLAN FOR PROPOSED

HIGHWAY EROSION CONTROL

WAKE /FRANKLIN COUNTY

LOCATION: *I-6001 – I-87 /FUTURE I-87/US-64/US-264 FROM US 64 /264 BRIDGES OVER BUS 264 TO THE NASH COUNTY LINE.*

TYPE OF WORK: *PAVEMENT REHABILITATION, SIGNING AND ITS*

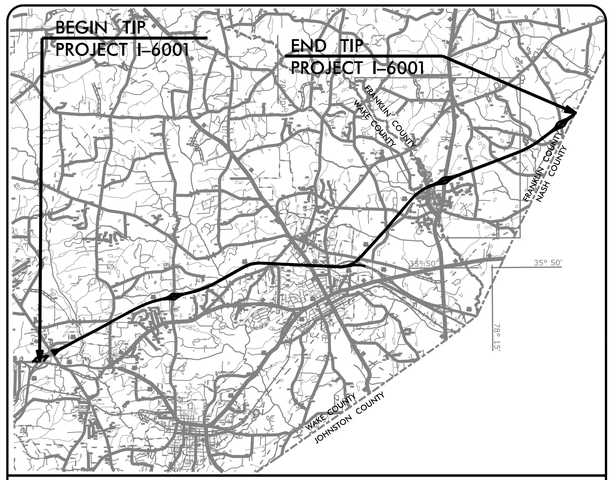

VICINITY MAP

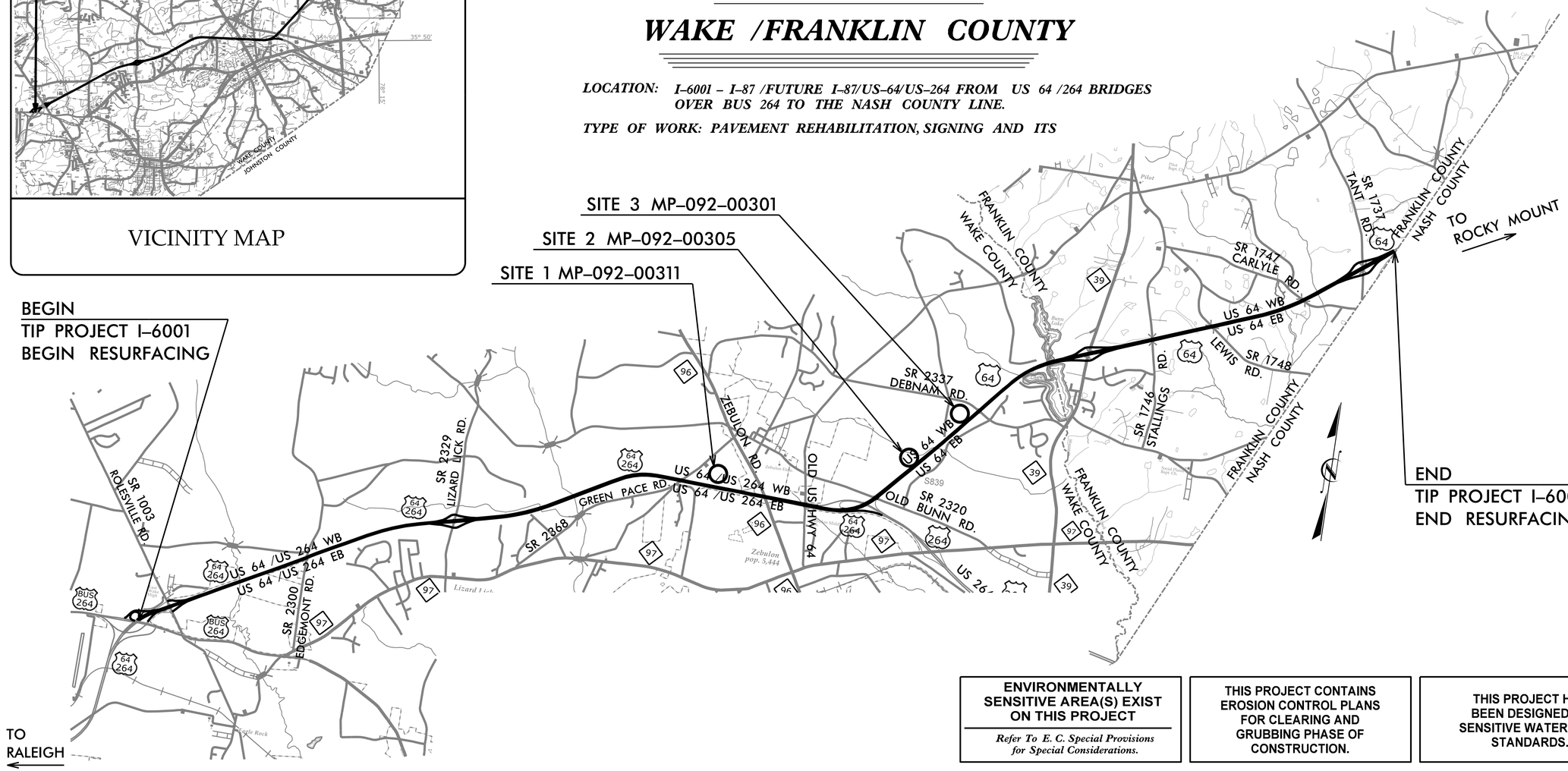

ENVIRONMENTALLY SENSITIVE AREA(S) EXIST ON THIS PROJECT

Refer To E. C. Special Provisions for Special Considerations.

THIS PROJECT CONTAINS EROSION CONTROL PLANS FOR CLEARING AND GRUBBING PHASE OF CONSTRUCTION.

THIS PROJECT HAS BEEN DESIGNED TO SENSITIVE WATERSHED STANDARDS.

GRAPHIC SCALE

50 25 0 50 100

PLANS

THESE EROSION AND SEDIMENT CONTROL PLANS COMPLY WITH THE REGULATIONS SET FORTH BY THE NCG 010000 GENERAL STORMWATER CONSTRUCTION PERMIT ISSUED BY THE NORTH CAROLINA DEPARTMENT OF ENVIRONMENTAL QUALITY DIVISION OF ENERGY, MINERAL, AND LAND RESOURCES.

WETHERILL ENGINEERING

1223 JONES FRANKLIN ROAD
Raleigh, N.C. 27606
License No. F-0377
Bus: 919 851 8077
Fax: 919 851 8107

Prepared in the Office of:

WETHERILL ENGINEERING, INC.

1223 JONES FRANKLIN ROAD
RALEIGH, NC 27606

Designed by:

KATIE ESTEP	*4485*
NAME	*LEVEL III CERTIFICATION NO.*

Roadway Standard Drawings

The "Roadway Standard Drawings"- Roadway Design Unit - N. C. Department of Transportation - Raleigh, N. C., dated January 2024 and the latest revision thereto are applicable to this project and by reference hereby are considered a part of these plans.

11/4/2025
USER:KEstep
PW:Y:\I-6001_EC.dgn

PROJECT REFERENCE NO.	SHEET NO.
I-6001	EC-02
ROADWAY DESIGN ENGINEER	HYDRAULICS ENGINEER

DIVISION OF HIGHWAYS
STATE OF NORTH CAROLINA

EROSION & SEDIMENT CONTROL LEGEND

Std. #	Description	Symbol
1605.01	Temporary Silt Fence	
1606.01	Special Sediment Control Fence	
1622.01	Temporary Berms and Slope Drains	
1630.02	Silt Basin Type B	
1630.03	Temporary Silt Ditch	TSD
1630.04	Stilling Basin	
1630.05	Temporary Diversion	TD
1630.06	Special Stilling Basin	
1630.07	Skimmer Basin	
1630.08	Tiered Skimmer Basin	
1630.09	Earthen Dam with Skimmer	
	Infiltration Basin	
	Rock Inlet Sediment Trap:	
1632.01	Type A	A
1632.02	Type B	B
1632.03	Type C	C

Std. #	Description	Symbol
1633.01	Temporary Rock Silt Check Type A	
1633.02	Temporary Rock Silt Check Type B	
1633.03	Temporary Rock Silt Check Type A with Excelsior Matting and Flocculant	
1634.01	Temporary Rock Sediment Dam Type A	
1634.02	Temporary Rock Sediment Dam Type B	
1635.01	Rock Pipe Inlet Sediment Trap Type A	A
1635.02	Rock Pipe Inlet Sediment Trap Type B	B
1636.01	Excelsior Wattle Check	
1636.01	Excelsior Wattle Check with Flocculant	
1636.01	Coir Fiber Wattle Check	
1636.01	Coir Fiber Wattle Check with Flocculant	
1636.02	Silt Fence Excelsior Wattle Break	EW
	Silt Fence Coir Fiber Wattle Break	CFW
1636.03	Excelsior Wattle Barrier	—EW—EW—EW—
1636.03	Coir Fiber Wattle Barrier	—CFW—CFW—CFW—

PROJECT REFERENCE NO.	SHEET NO.
I-6001	EC-2A
R/W SHEET NO.	
ROADWAY DESIGN ENGINEER	HYDRAULICS ENGINEER

ONSITE CONCRETE WASHOUT STRUCTURE WITH LINER

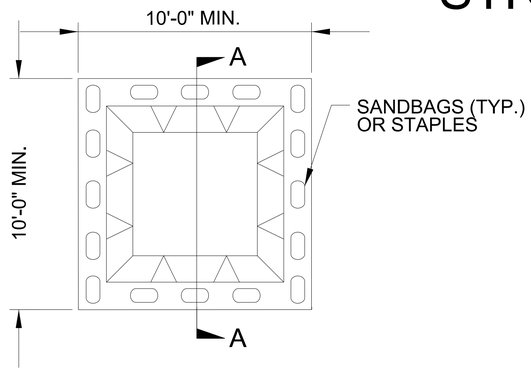

PLAN

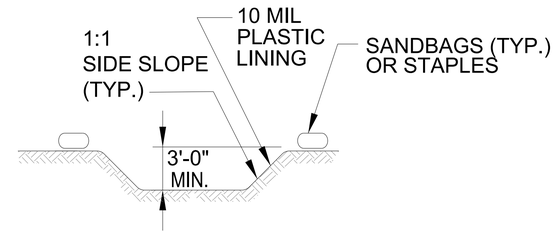

SECTION A-A

NOTES:
1. ACTUAL LOCATION DETERMINED IN FIELD

2. THE CONCRETE WASHOUT STRUCTURES SHALL BE MAINTAINED WHEN THE LIQUID AND/OR SOLID REACHES 75% OF THE STRUCTURES CAPACITY TO PROVIDE ADEQUATE HOLDING CAPACITY WITH A MINIMUM 12 INCHES OF FREEBOARD.

3.CONCRETE WASHOUT STRUCTURE NEEDS TO BE CLEARLY MARKED WITH SIGNAGE NOTING DEVICE.

BELOW GRADE WASHOUT STRUCTURE

NOT TO SCALE

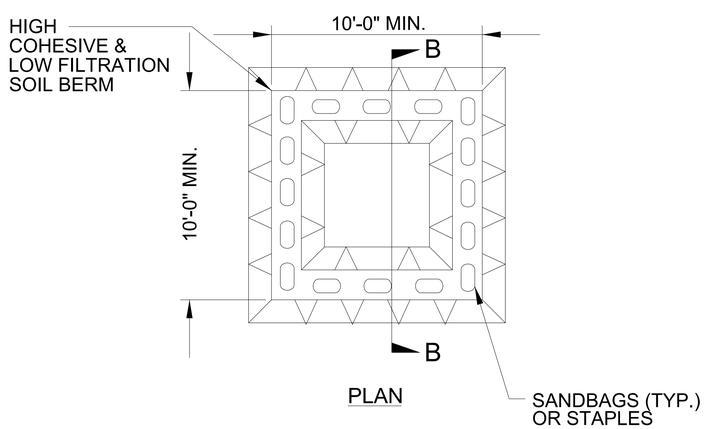

PLAN

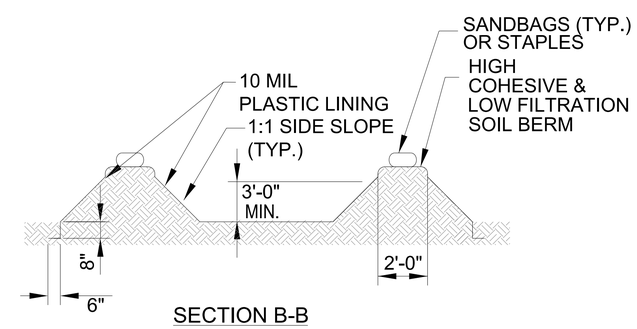

SECTION B-B

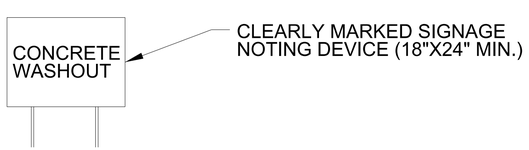

NOTES:
1. ACTUAL LOCATION DETERMINED IN FIELD

2. THE CONCRETE WASHOUT STRUCTURES SHALL BE MAINTAINED WHEN THE LIQUID AND/OR SOLID REACHES 75% OF THE STRUCTURES CAPACITY TO PROVIDE ADEQUATE HOLDING CAPACITY WITH A MINIMUM 12 INCHES OF FREEBOARD.

3.CONCRETE WASHOUT STRUCTURE NEEDS TO BE CLEARLY MARKED WITH SIGNAGE NOTING DEVICE.

ABOVE GRADE WASHOUT STRUCTURE

NOT TO SCALE

PROJECT REFERENCE NO.	SHEET NO.
I-6001	EC-2A
R/W SHEET NO.	
ROADWAY DESIGN ENGINEER	HYDRAULICS ENGINEER

EXAMPLE OF PUMP–AROUND OPERATION

NOTES:
1) All excavation shall be performed in only dry or isolated areas of the work zone.
2) Impervious dikes are to be used to isolate work from stream flow when necessary.
3) Maintenance of stream flow operations shall be incidental to the work. This includes polyethylene sheeting, diversion pipes, pumps and hoses.
4) Pumps and hoses shall be of sufficient size to dewater the work area.

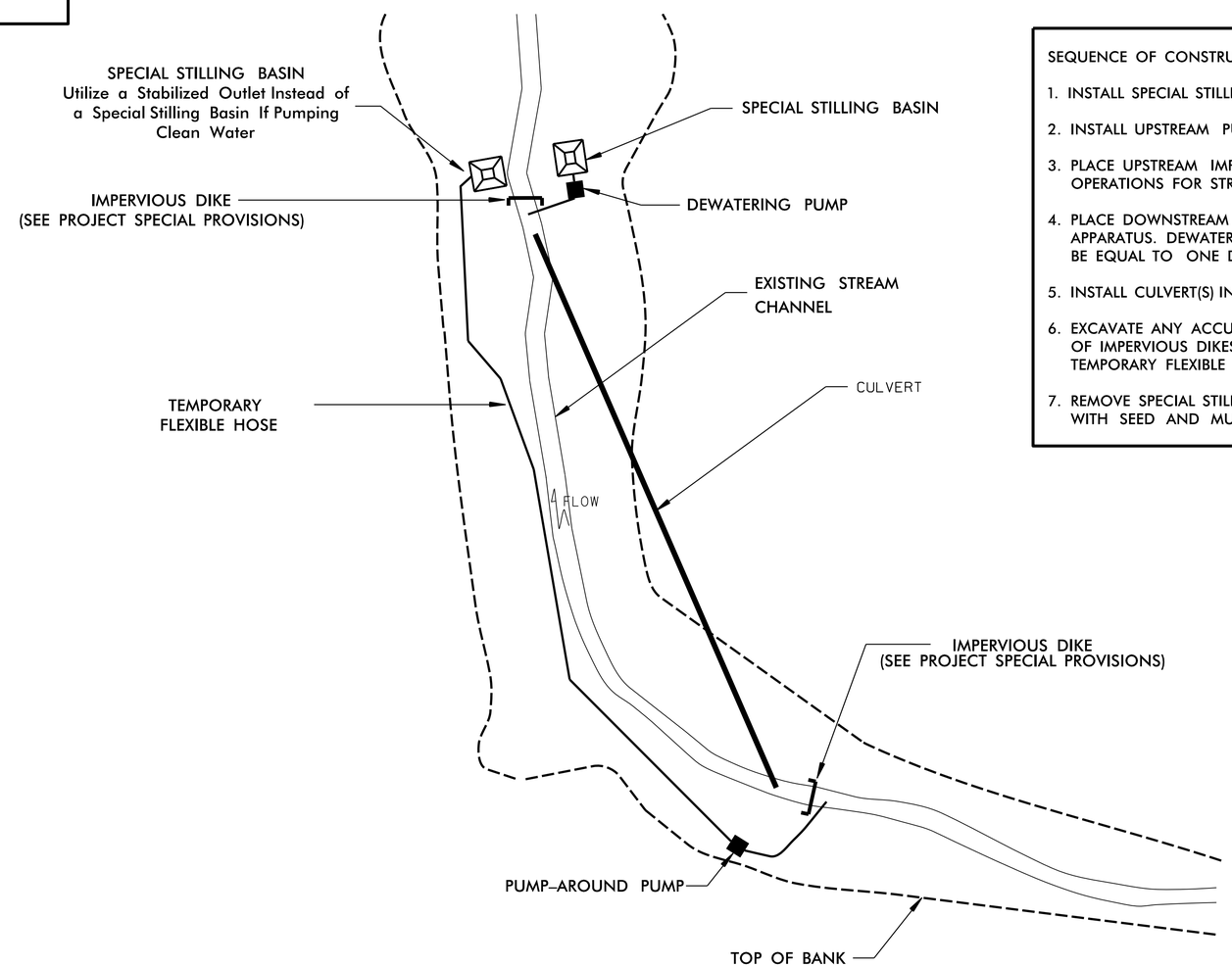

SEQUENCE OF CONSTRUCTION FOR TYPICAL WORK AREA

1. INSTALL SPECIAL STILLING BASIN(S).
2. INSTALL UPSTREAM PUMP AND TEMPORARY FLEXIBLE HOSE.
3. PLACE UPSTREAM IMPERVIOUS DIKE AND BEGIN PUMPING OPERATIONS FOR STREAM DIVERSION.
4. PLACE DOWNSTREAM IMPERVIOUS DIKE AND PUMPING APPARATUS. DEWATER ENTRAPPED AREA. AREA TO BE DEWATERED SHALL BE EQUAL TO ONE DAY'S WORK.
5. INSTALL CULVERT(S) IN ACCORDANCE WITH THE PLANS.
6. EXCAVATE ANY ACCUMULATED SILT AND DEWATER BEFORE REMOVAL OF IMPERVIOUS DIKES. REMOVE IMPERVIOUS DIKES, PUMPS, AND TEMPORARY FLEXIBLE HOSE. (DOWNSTREAM IMPERVIOUS DIKES FIRST).
7. REMOVE SPECIAL STILLING BASIN(S) AND BACKFILL. STABILIZE DISTURBED AREA WITH SEED AND MULCH.

PROJECT REFERENCE NO.	SHEET NO.
I-6001	EC-3
ROADWAY DESIGN ENGINEER	HYDRAULICS ENGINEER

DIVISION OF HIGHWAYS
STATE OF NORTH CAROLINA

SOIL STABILIZATION TIMEFRAMES

SITE DESCRIPTION	STABILIZATION TIME	TIMEFRAME EXCEPTIONS
PERIMETER DIKES, SWALES, DITCHES AND SLOPES	7 DAYS	NONE
HIGH QUALITY WATER (HQW) ZONES	7 DAYS	NONE
SLOPES STEEPER THAN 3:1	7 DAYS	IF SLOPES ARE 10' OR LESS IN LENGTH AND ARE NOT STEEPER THAN 2:1, 14 DAYS ARE ALLOWED.
SLOPES 3:1 TO 4:1	14 DAYS	7 DAYS FOR SLOPES GREATER THAN 50' IN LENGTH WITH SLOPES STEEPER THAN 4:1. 7 DAYS FOR PERIMETER DIKES, SWALES, DITCHES PERIMETER SLOPES, AND HQW ZONES
ALL OTHER AREAS WITH SLOPES FLATTER THAN 4:1	14 DAYS	7 DAYS FOR PERIMETER DIKES, SWALES, DITCHES PERIMETER SLOPES, AND HQW ZONES

PROJECT REFERENCE NO.	SHEET NO.
I-6001	EC-4/CONST.23
R/W SHEET NO.	
ROADWAY DESIGN ENGINEER	HYDRAULICS ENGINEER

MP-092-00311

CLEARING & GRUBBING EROSION CONTROL FOR CONSTRUCTION SHEET 23

NOTE:
PLACE TEMPORARY ROCK SEDIMENT DAMS TYPE – B AND TEMPORARY ROCK SILT CHECKS TYPE – A AT DRAINAGE OUTLETS.

100′ 0′ 100′
GRAPHIC SCALE

ENVIRONMENTALLY SENSITIVE AREA
SEE PROJECT SPECIAL PROVISIONS

NC GRID
NAD 83 NA 2011

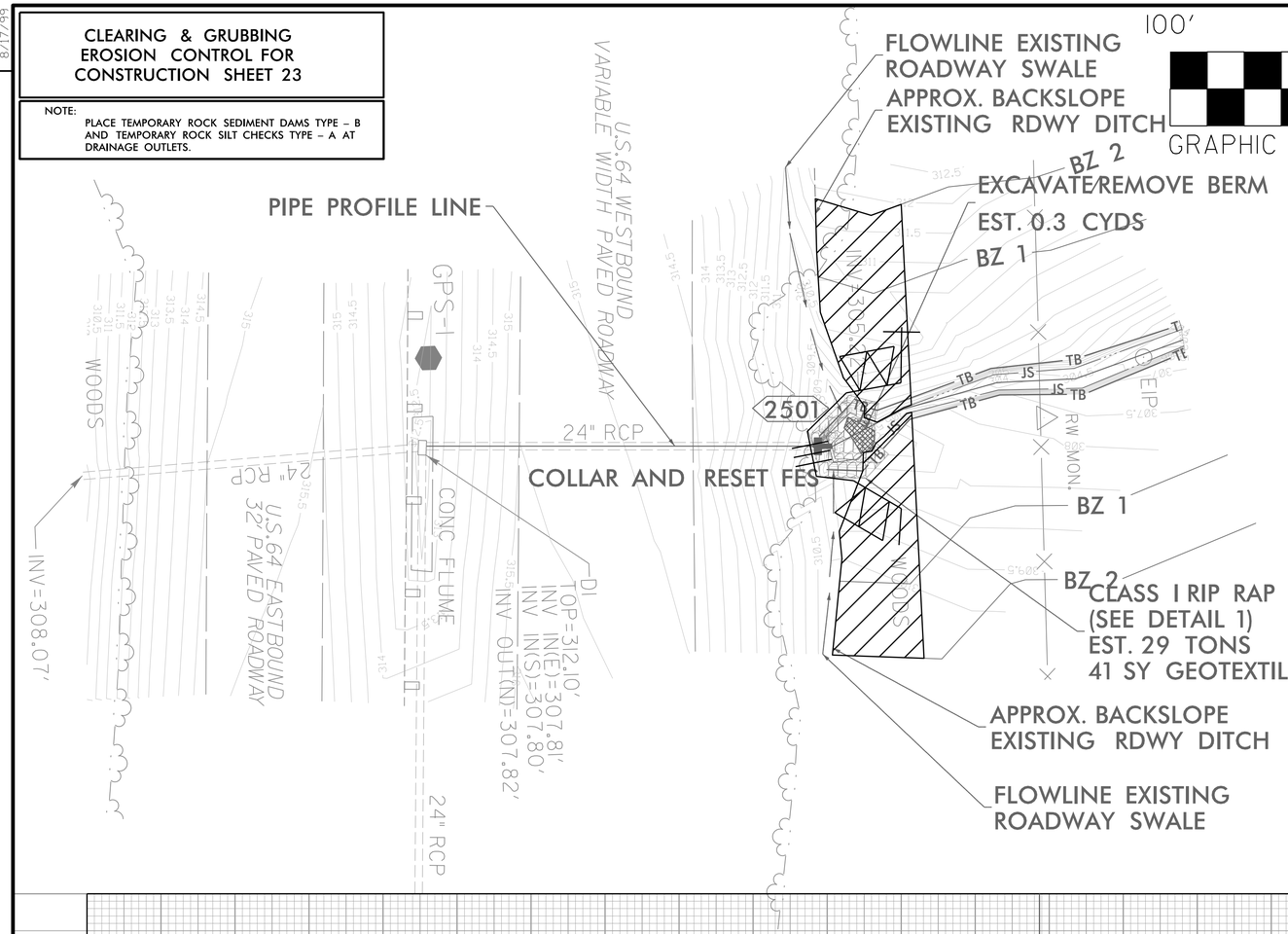

DETAIL 1

BANK & SCOUR HOLE STABILIZATION

(Not to Scale)

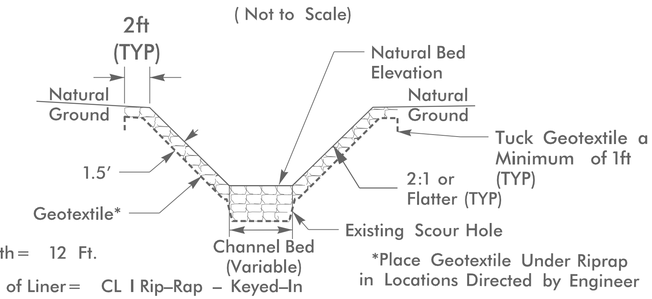

Length = 12 Ft.

Type of Liner = CL I Rip–Rap – Keyed–In

*Place Geotextile Under Riprap in Locations Directed by Engineer

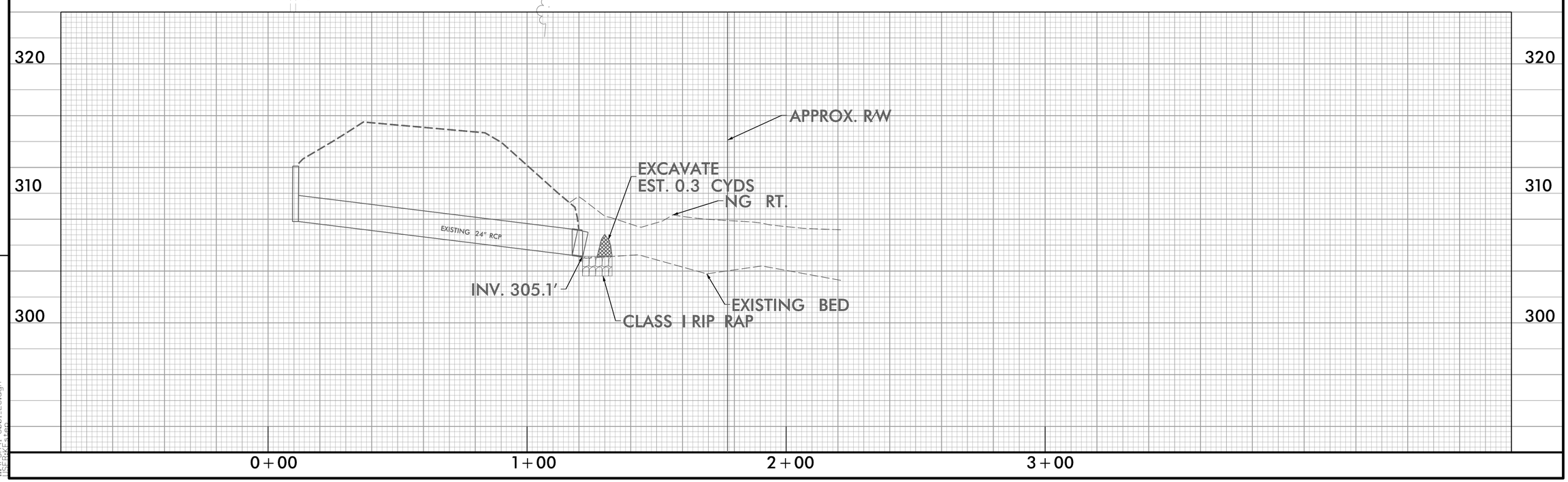

REVISIONS

8/17/99

11/4/2025
I-6001_EC.dgn
ISFHZ2.sign

8/17/99

REVISIONS

CLEARING & GRUBBING EROSION CONTROL FOR CONSTRUCTION SHEET 31

NOTE:
PLACE TEMPORARY ROCK SEDIMENT DAMS TYPE – B AND TEMPORARY ROCK SILT CHECKS TYPE – A AT DRAINAGE OUTLETS.

MP–092–00305

PROJECT REFERENCE NO.	SHEET NO.
I-6001	EC-5/CONST.31
R/W SHEET NO.	
ROADWAY DESIGN ENGINEER	HYDRAULICS ENGINEER

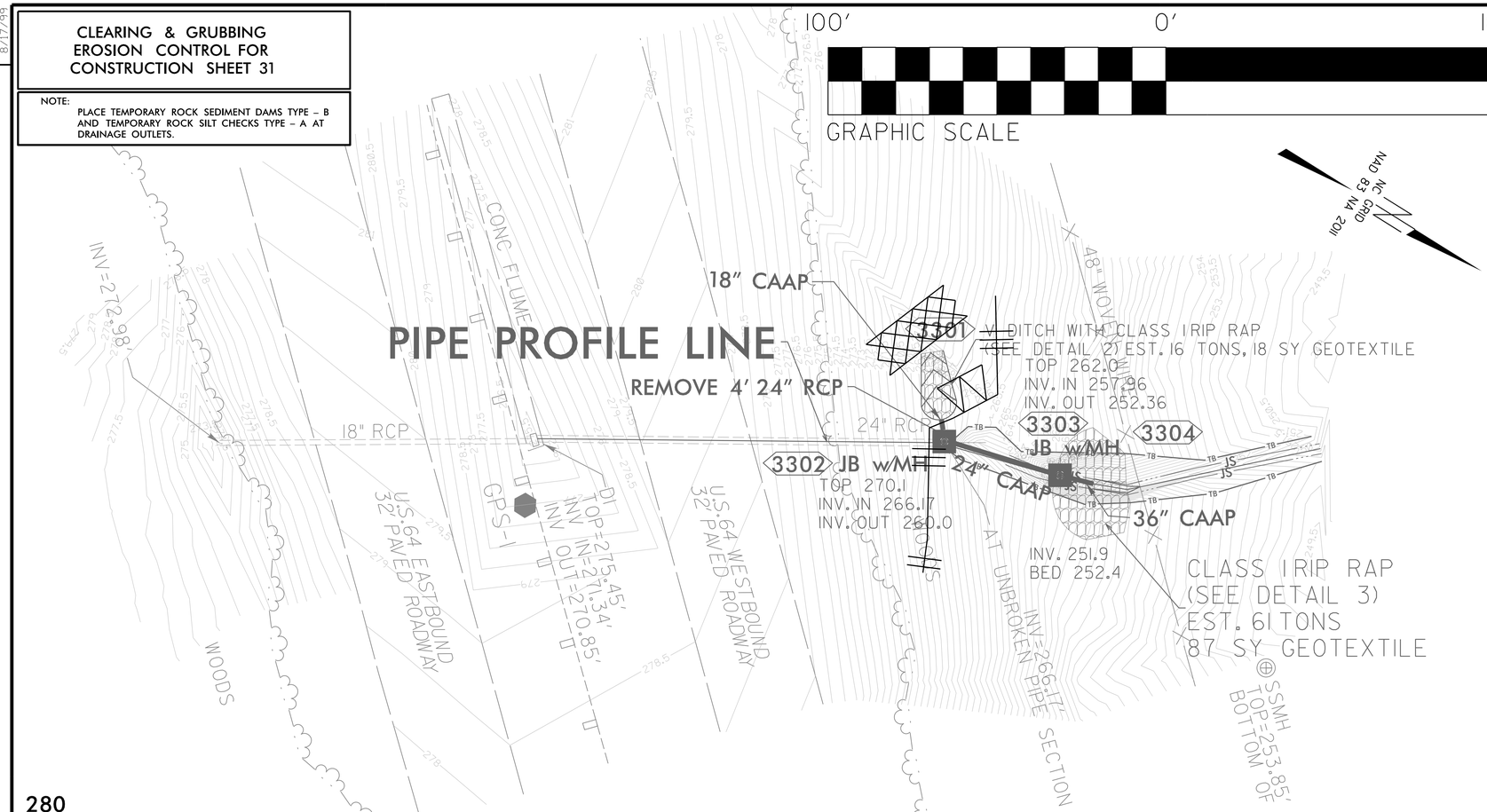

DETAIL 2
STANDARD 'V' DITCH
(Not to Scale)

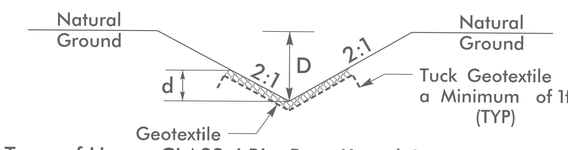

Type of Liner = CLASS I Rip–Rap, Keyed–In
EST. 16 TONS, 18 SY GEOTEXTILE

Min.D = 1.5Ft.
d = 1.5 Ft.

DETAIL 3
PIPE OUTLET STABILIZATION
(Not to Scale)

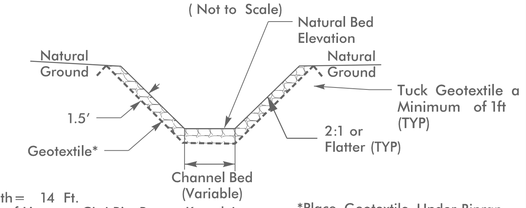

Length = 14 Ft.
Type of Liner = CL I Rip–Rap – Keyed–In
EST. 61 TONS, 87 SY GEOTEXTILE

*Place Geotextile Under Riprap in Locations Directed by Engineer

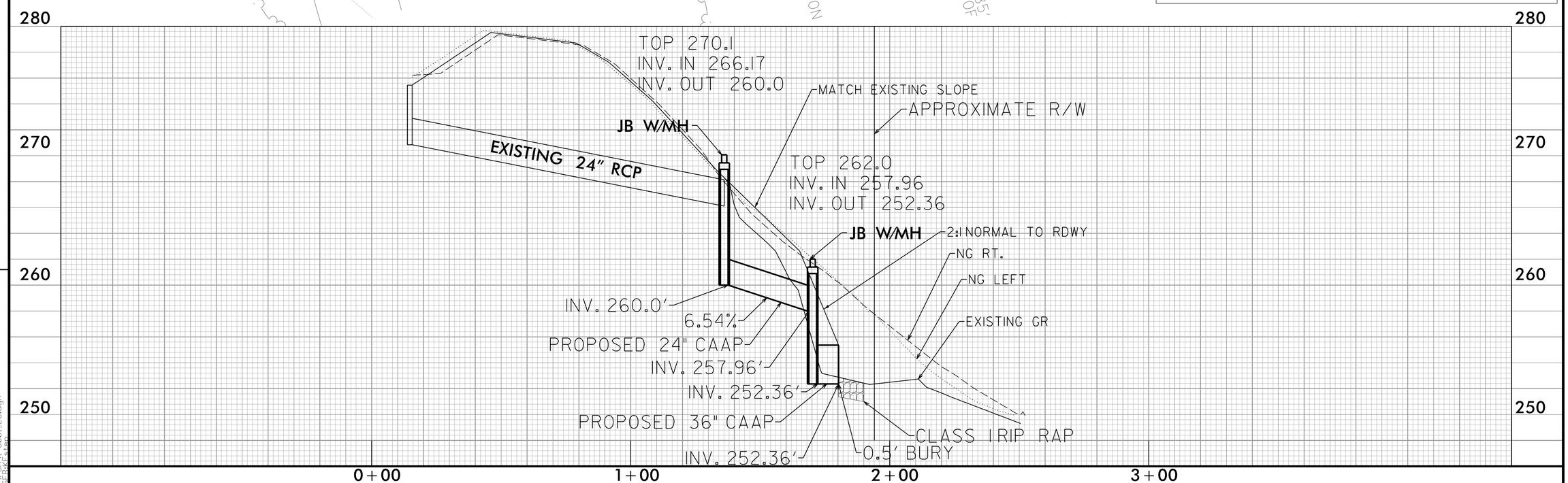

11/4/2025
I-6001_EC.dgn
SEPHEASTER

PROJECT REFERENCE NO.	SHEET NO.
I-6001	EC-6/CONST.32
R/W SHEET NO.	
ROADWAY DESIGN ENGINEER	HYDRAULICS ENGINEER

CLEARING & GRUBBING EROSION CONTROL FOR CONSTRUCTION SHEET 32

NOTE:
PLACE TEMPORARY ROCK SEDIMENT DAMS TYPE – B AND TEMPORARY ROCK SILT CHECKS TYPE – A AT DRAINAGE OUTLETS.

MP–092–00301

NC GRID
NAD 83 NA 2011

100′ 0′ 100′
GRAPHIC SCALE

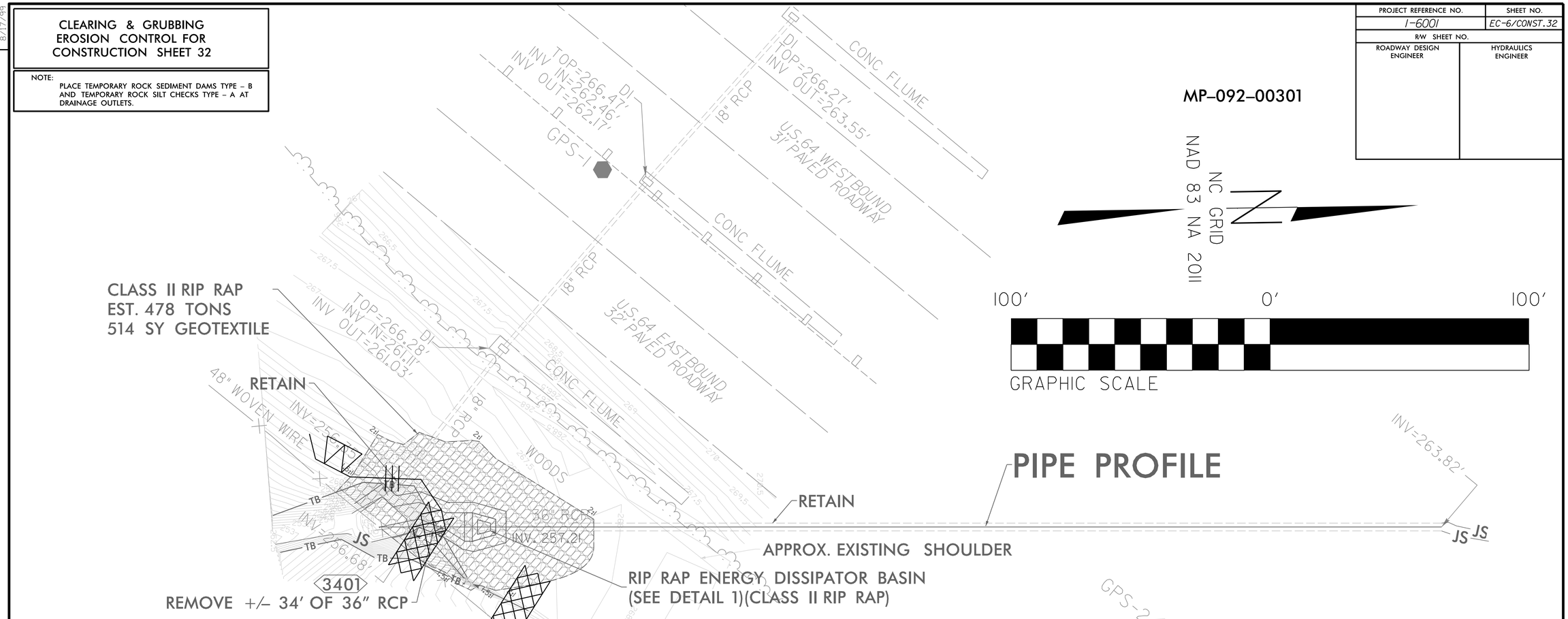

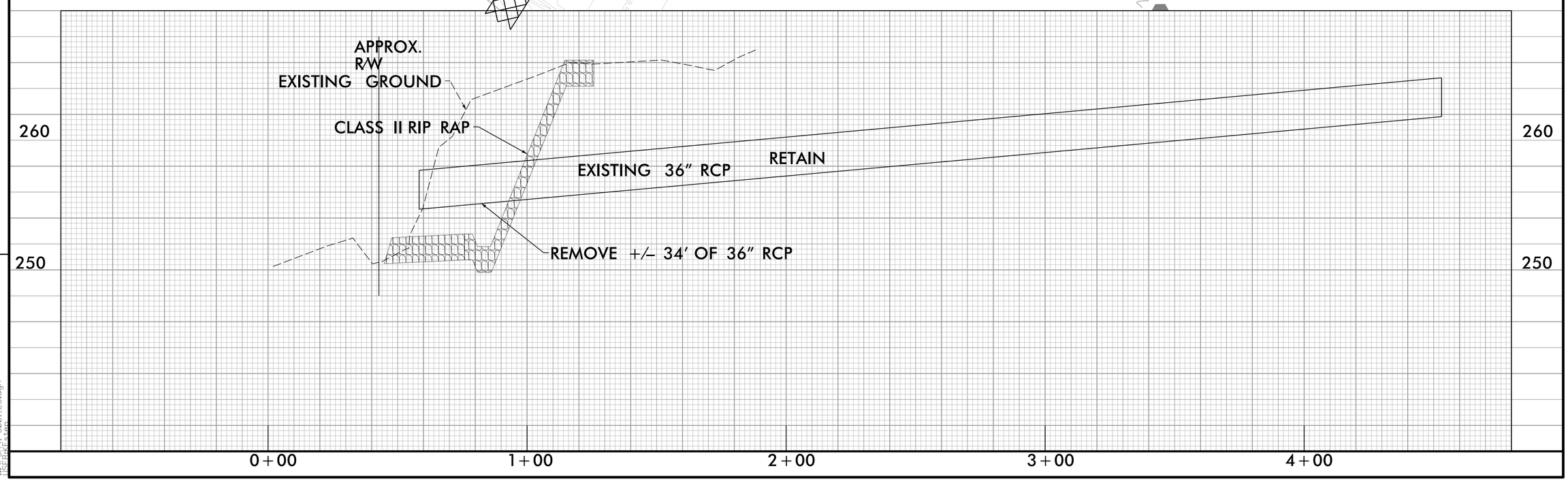

REVISIONS

8/17/99

11/4/2025
I:\PROJ\I-6001_EC.dgn
USER:KEEP

PROJECT REFERENCE NO.	SHEET NO.
I-6001	EC-6A
ROADWAY DESIGN ENGINEER	HYDRAULICS ENGINEER

DETAIL 1
RIP–RAPPED ENERGY DISSIPATOR BASIN (CLASS II RIP RAP)

DIM. (ft)	RIP RAP BASIN 1	na	na
A	3′	na	na
B	2′	na	na
C	1′ MIN.	na	na
D	1′ MIN.	na	na
E	3′	na	na
F	11′	na	na
G	9′	na	na

ALL DIMENSIONS APPROXIMATE

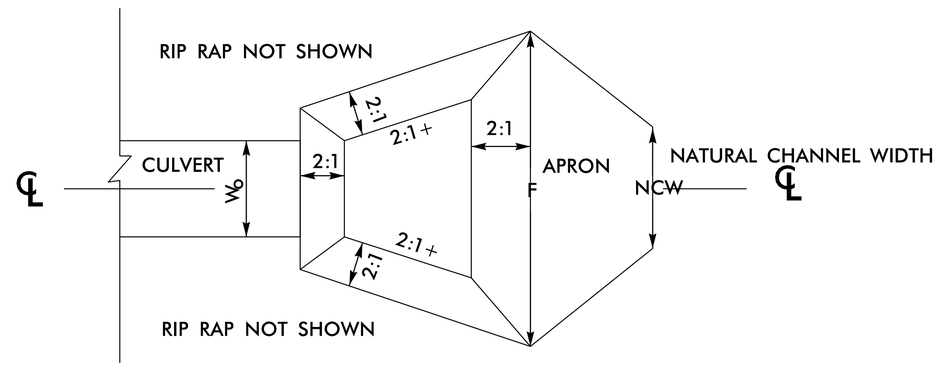

PLAN

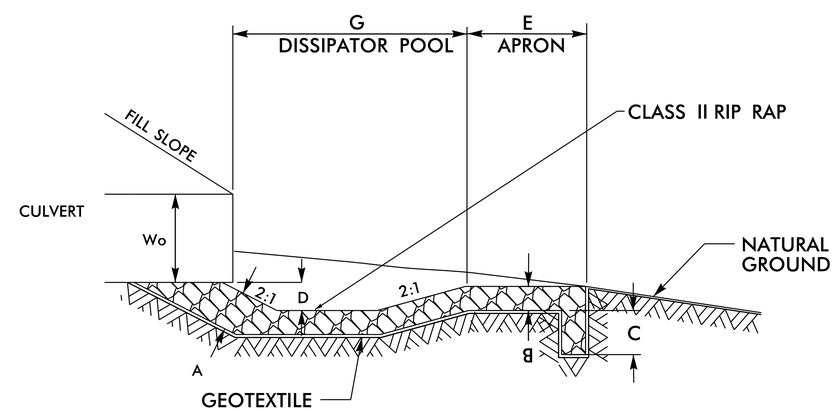

℄ SECTION

7/08

NOT TO SCALE

REVISIONS

8/17/99

12/16/2025 I-6001_EC.dgn

PROJECT REFERENCE NO.	SHEET NO.
I-6001	EC-7/CONST.23
R/W SHEET NO.	
ROADWAY DESIGN ENGINEER	HYDRAULICS ENGINEER

MP-092-00311

FINAL GRADE
EROSION CONTROL FOR
CONSTRUCTION SHEET 23

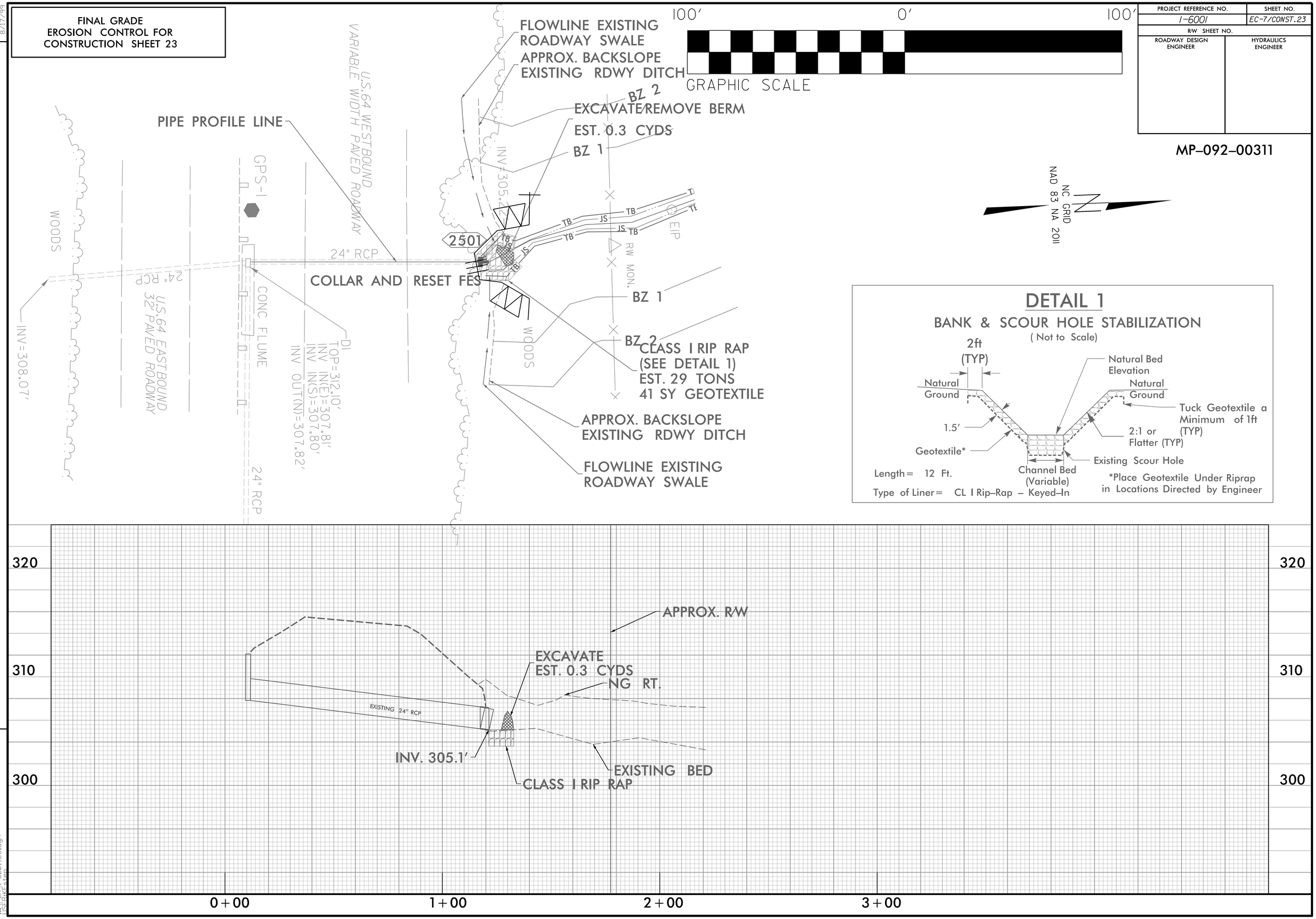

DETAIL 1

BANK & SCOUR HOLE STABILIZATION

(Not to Scale)

2ft (TYP)
Natural Ground
Natural Bed Elevation
Natural Ground
Tuck Geotextile a Minimum of 1ft (TYP)
1.5'
2:1 or Flatter (TYP)
Geotextile*
Existing Scour Hole
Channel Bed (Variable)

Length = 12 Ft.

Type of Liner = CL I Rip-Rap – Keyed-In

*Place Geotextile Under Riprap in Locations Directed by Engineer

REVISIONS

8/17/99

11/4/2025
I-6001_EC.dgn
ISE-HZE-s.sep

FINAL GRADE
EROSION CONTROL FOR
CONSTRUCTION SHEET 31

MP-092-00305

PROJECT REFERENCE NO.	SHEET NO.
I-6001	EC-8/CONST.31
R/W SHEET NO.	
ROADWAY DESIGN ENGINEER	HYDRAULICS ENGINEER

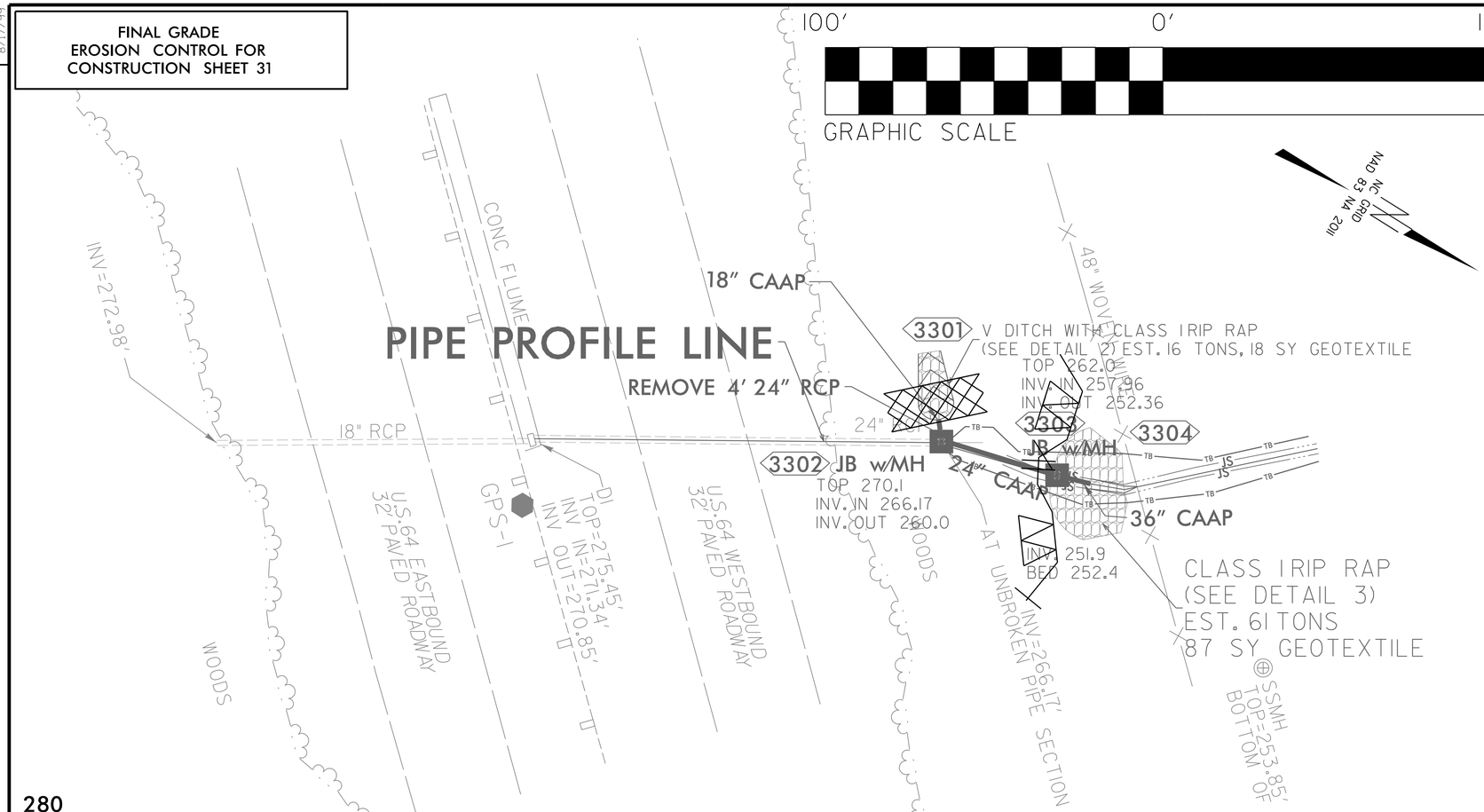

DETAIL 2

STANDARD 'V' DITCH
(Not to Scale)

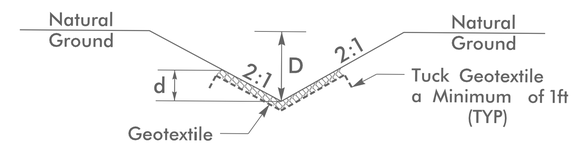

Type of Liner = CLASS I Rip-Rap, Keyed-In
EST. 16 TONS, 18 SY GEOTEXTILE

Min.D = 1.5Ft.
d = 1.5 Ft.

DETAIL 3

PIPE OUTLET STABILIZATION
(Not to Scale)

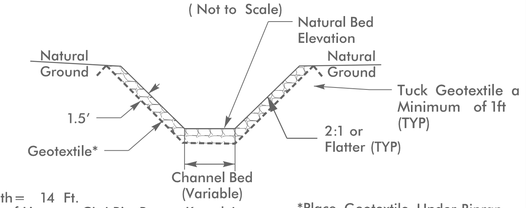

Length = 14 Ft.
Type of Liner = CL I Rip-Rap - Keyed-In
EST. 61 TONS, 87 SY GEOTEXTILE

*Place Geotextile Under Riprap in Locations Directed by Engineer

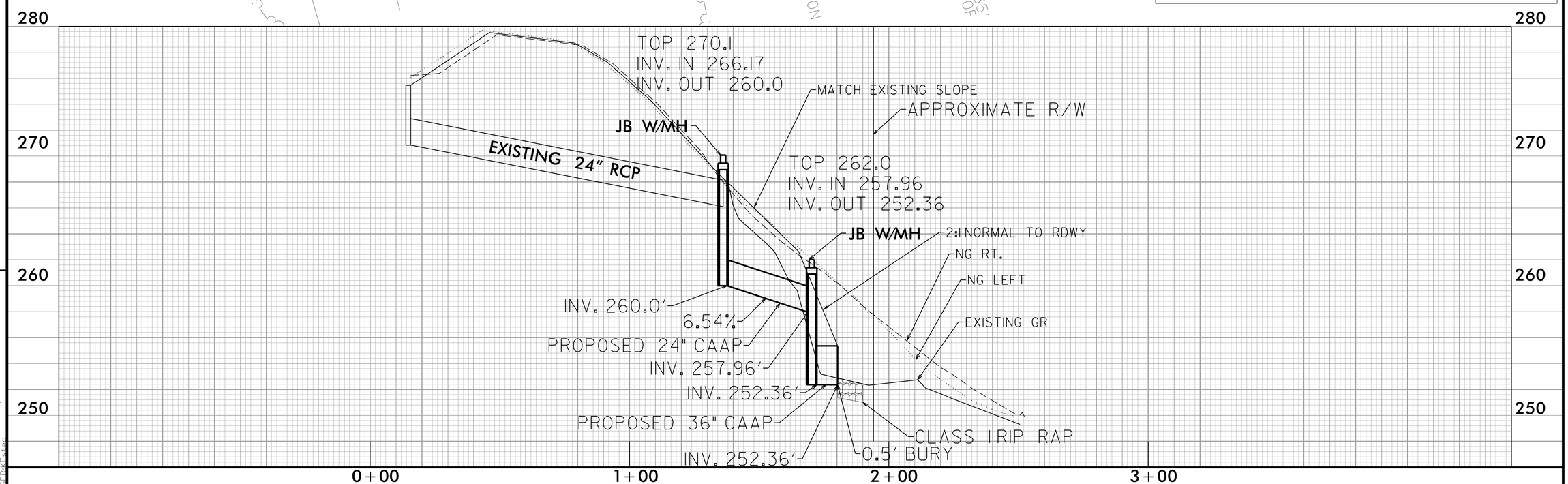

REVISIONS

8/17/99

11/4/2025
I-6001_EC.dgn
SEPHEASTER

FINAL GRADE
EROSION CONTROL FOR
CONSTRUCTION SHEET 32

PROJECT REFERENCE NO.	SHEET NO.
I-6001	EC-9/CONST.32
R/W SHEET NO.	
ROADWAY DESIGN ENGINEER	HYDRAULICS ENGINEER

MP-092-00301

NC GRID
NAD 83 NA 2011

100′ 0′ 100′
GRAPHIC SCALE

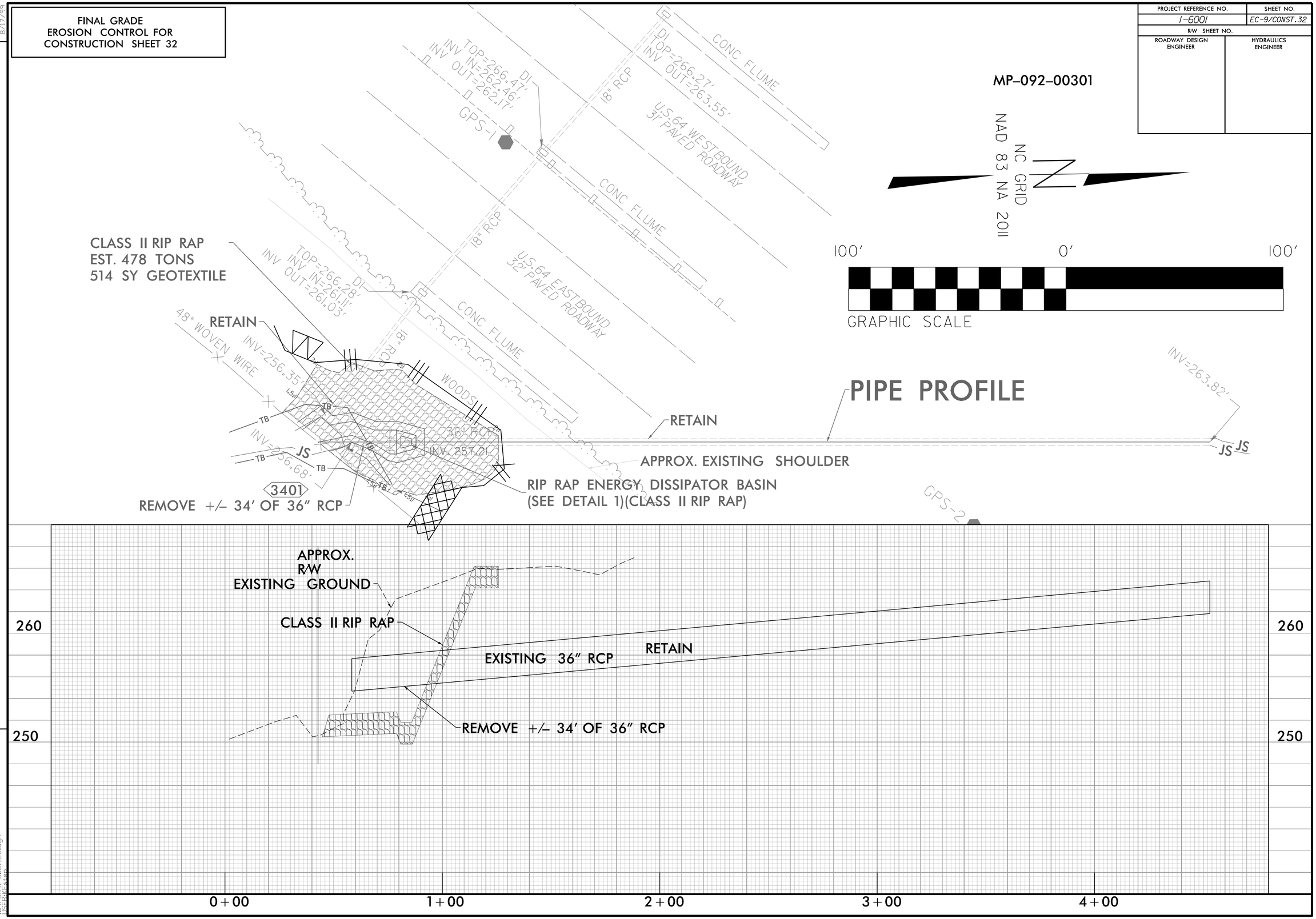

REVISIONS

8/17/99

11/4/2025
PSNC I-6001_EC.dgn
USER: ECE.kep