8/17/99

REVISIONS

CLEARING & GRUBBING EROSION CONTROL FOR CONSTRUCTION SHEET 31

NOTE:
PLACE TEMPORARY ROCK SEDIMENT DAMS TYPE – B AND TEMPORARY ROCK SILT CHECKS TYPE – A AT DRAINAGE OUTLETS.

MP–092–00305

PROJECT REFERENCE NO.	SHEET NO.
I-6001	EC-5/CONST.31
R/W SHEET NO.	
ROADWAY DESIGN ENGINEER	HYDRAULICS ENGINEER

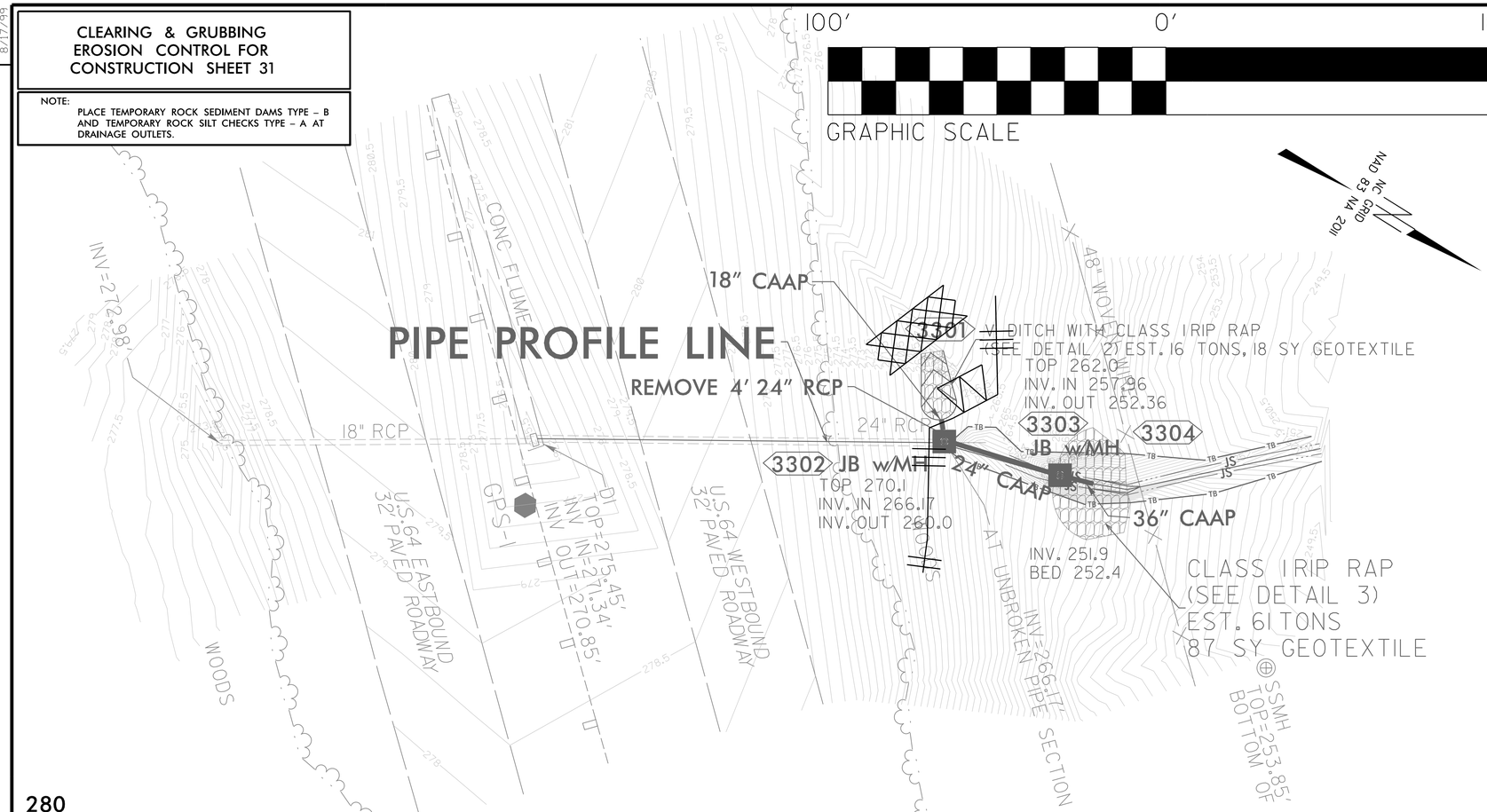

DETAIL 2
STANDARD 'V' DITCH
(Not to Scale)

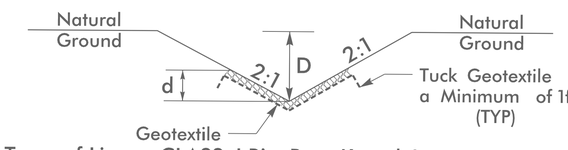

Type of Liner = CLASS I Rip–Rap, Keyed–In
EST. 16 TONS, 18 SY GEOTEXTILE

Min.D = 1.5Ft.
d = 1.5 Ft.

DETAIL 3
PIPE OUTLET STABILIZATION
(Not to Scale)

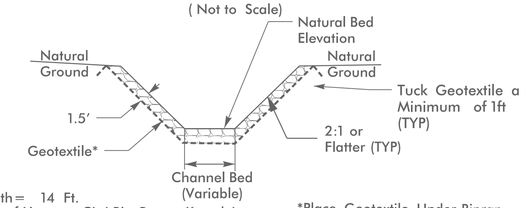

Length = 14 Ft.
Type of Liner = CL I Rip–Rap – Keyed–In
EST. 61 TONS, 87 SY GEOTEXTILE

*Place Geotextile Under Riprap in Locations Directed by Engineer

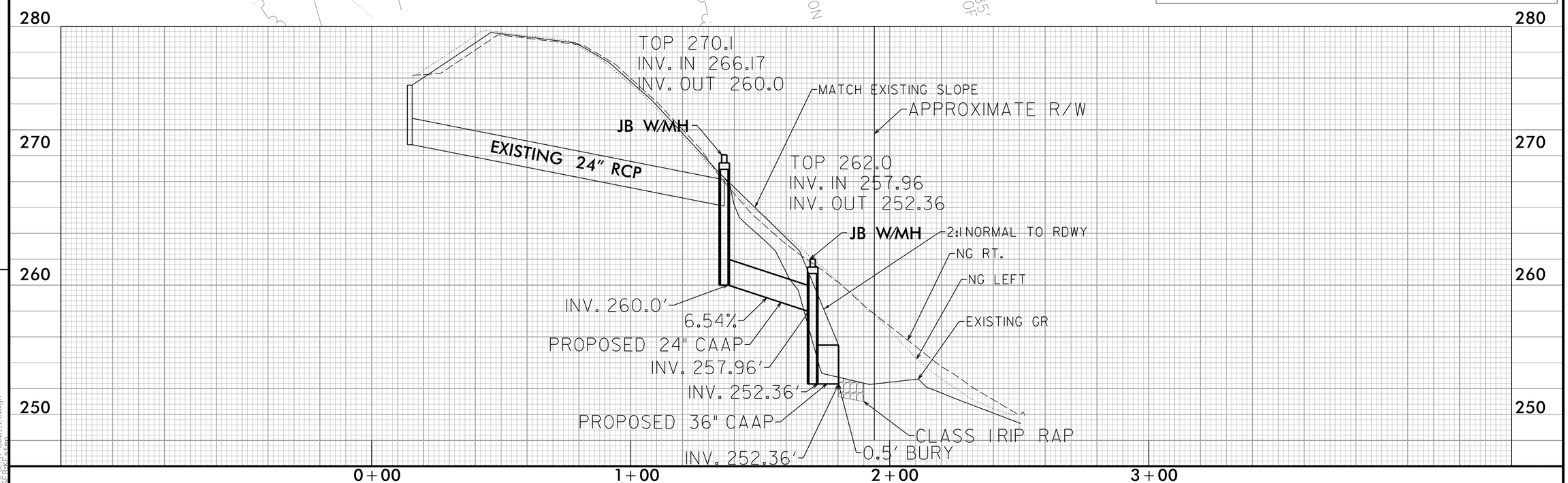

11/4/2025
I-6001_EC.dgn
SEPHEASTER