Docusign Envelope ID: 41135000-27AC-4215-BB4B-0D2F74257EE3

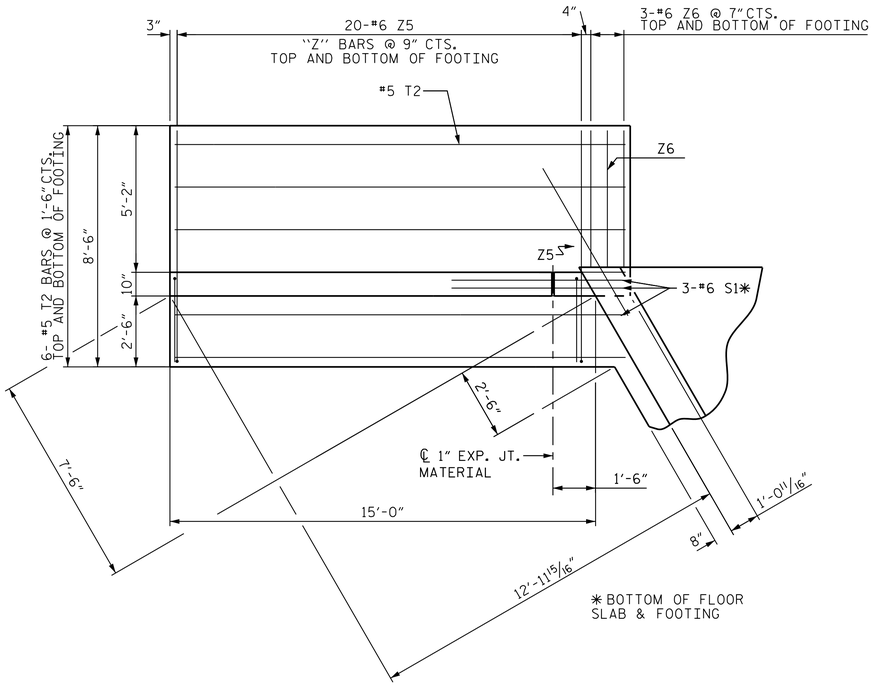

PLAN W1

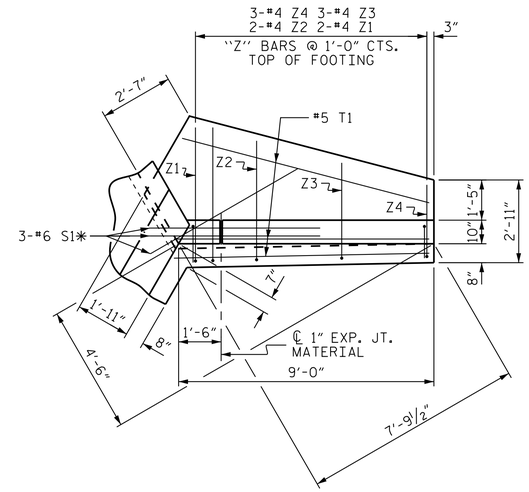

PLAN W2

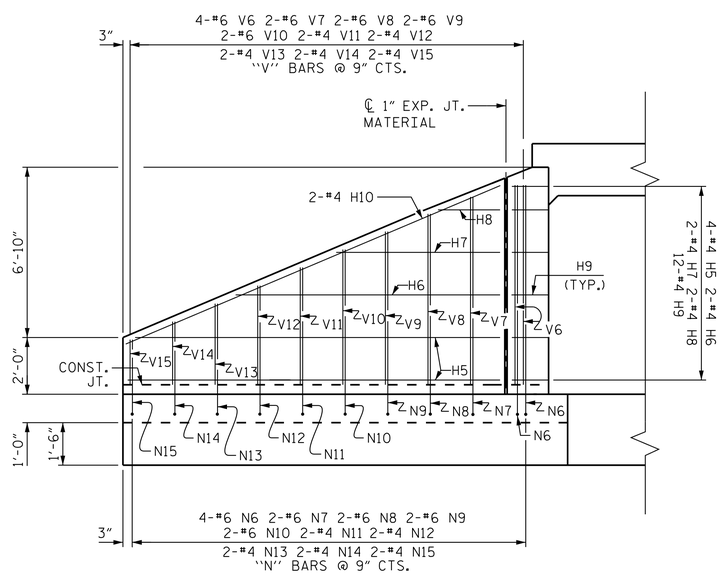

ELEVATION W1

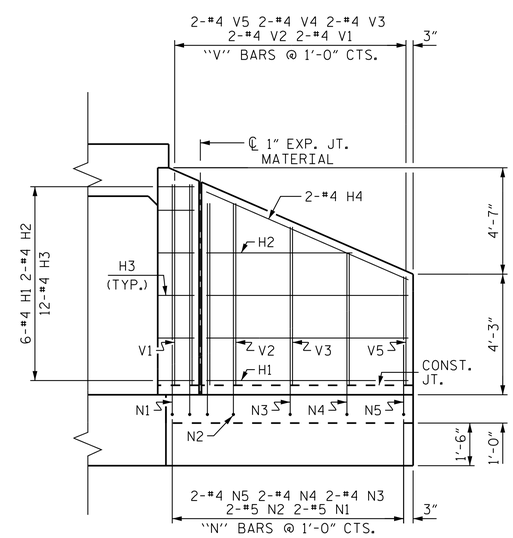

ELEVATION W2

PROJECT NO. U-6105
MECKLENBURG COUNTY
STATION: 22+01.71 -L-

SHEET 6 OF 8

STATE OF NORTH CAROLINA
DEPARTMENT OF TRANSPORTATION
RALEIGH

WING WALLS FOR CONCRETE BOX CULVERT

H = 7'-0" SLOPE = 2:1
120° SKEW

NORTH CAROLINA PROFESSIONAL ENGINEER SEAL 040769 ANDREW L. PHILLIPS
DOCUSIGNED BY:
ANDREW L. PHILLIPS
11/6/2025

Kimley»Horn
421 Fayetteville Street, Suite 600
Raleigh, NC 27601-1772
Phone (919) 677-2000
NC LICENSE # F-0102

This document, together with the concepts and designs presented herein, as an instrument of services, is intended only for the specific purpose and client for which it was prepared. Reuse of and improper reliance of this document without written consent by Kimley-Horn and Associates, Inc. shall be without liability to Kimley-Horn and Associates, Inc.
Copyright Kimley-Horn and Associates, Inc., 2025

REVISIONS						
NO.	BY:	DATE:	NO.	BY:	DATE:	
1			3			
2			4			

SHEET NO. C2-6
TOTAL SHEETS 8

DOCUMENT NOT CONSIDERED FINAL
UNLESS ALL SIGNATURES COMPLETED

DRAWN BY: D. D. LOWERY	DATE: 05/2024	
CHECKED BY: B. M. KROL	DATE: 05/2024	
DESIGN ENGINEER OF RECORD: A. L. PHILLIPS	DATE: 05/2024	

11/6/2025

K:\RDT_Structures_Culvert\NC\01036528 - U-6105\Cad\Dgn\412_006_U6105_SMU_CU06.dgn

CULVERT 42C002