DocuSign Envelope ID: 8A15E678-B540-4F36-8C42-89BF30A2FD17

PROJECT REFERENCE NO.	SHEET NO.
U-6105	SIG. 1.1

18 CHANNEL CONFLICT MONITOR PROGRAMMING DETAIL

(remove jumpers and set switches as shown)

REMOVE DIODE JUMPERS 1-5, 1-6, 1-9, 1-11, 1-15, 1-18, 2-5, 2-6, 2-9, 2-11, 2-15, 2-18, 3-7, 3-8, 3-10, 3-12, 4-7, 4-8, 4-10, 4-12, 4-18, 5-9, 5-11, 5-18, 6-9, 6-11, 6-15, 7-10, 7-12, 7-18, 8-10, 8-12, 8-18, 9-11, 9-15, 9-18, 10-12, 10-18, 11-15, 11-18, and 12-18.

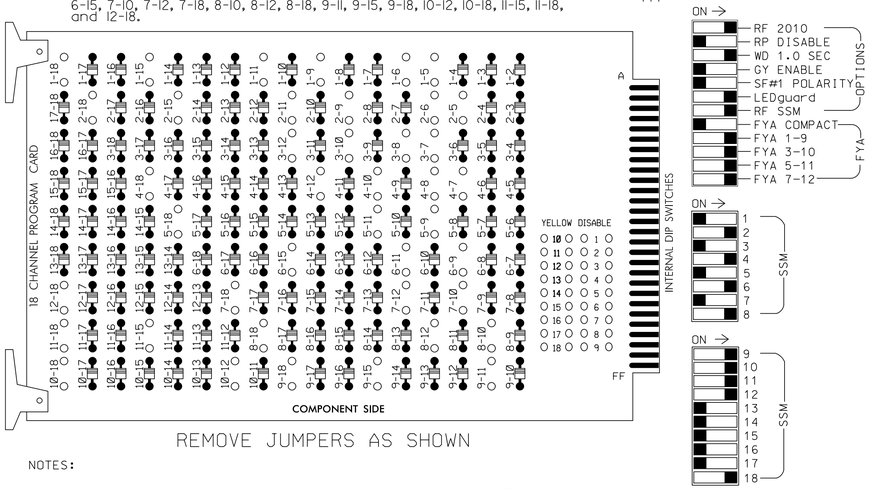

REMOVE JUMPERS AS SHOWN

■ = DENOTES POSITION OF SWITCH

NOTES:

1. Card is provided with all diode jumpers in place. Removal of any jumper allows its channels to run concurrently.
2. Ensure jumpers SEL2-SEL5 and SEL9 are present on the monitor board.
3. Ensure that the Red Enable is active at all times during normal operation.
4. Connect serial cable from conflict monitor to comm. port 1 of 2070 controller. Ensure conflict monitor communicates with 2070.

NOTES

1. To prevent "flash-conflict" problems, insert red flash program blocks for all unused vehicle load switches in the output file. The installer shall verify that signal heads flash in accordance with the signal plan.
2. Program phase 4 and 8 for dual entry.
3. Program controller to start up in phase 2 Green No Walk and 6 Green No Walk.
4. If this signal will be managed by an ATMS software, enable controller and detector logging for all detectors used at this location.

COUNTDOWN PEDESTRIAN SIGNAL OPERATION

Countdown Ped Signals are required to display timing only during Ped Clearance Interval. Consult Ped Signal Module user's manual for instructions on selecting this feature.

EQUIPMENT INFORMATION

CONTROLLER.....2070LX
CABINET.....332 W/AUX
SOFTWARE.....Q-FREE MAXTIME
CABINET MOUNT.....BASE
OUTPUT FILE POSITIONS...18 WITH AUX. OUTPUT FILE
LOAD SWITCHES USED.....S1,S2,S4,S5,S7,S8,S9,S10, S11,AUX S1,AUX S2,AUX S4, AUX S5,AUX S6
PHASES USED.....1,2,3,4,5,6,6 PED,7,8
OVERLAP "1".....*
OVERLAP "2".....*
OVERLAP "3".....*
OVERLAP "4".....*
OVERLAP "5".....NOT USED
OVERLAP "6".....*

* See overlap programming detail on sheet 2

SIGNAL HEAD HOOK-UP CHART

LOAD SWITCH NO.	S1	S2	S3	S4	S5	S6	S7	S8	S9	S10	S11	S12	AUX S1	AUX S2	AUX S3	AUX S4	AUX S5	AUX S6
CMU CHANNEL NO.	1	2	13	3	4	14	5	6	15	7	8	16	9	10	17	11	12	18
PHASE	1	2	2 PED	3	4	4 PED	5	6	6 PED	7	8	8 PED	OL1	OL2	SPARE	OL3	OL4	OL6
SIGNAL HEAD NO.	11★	21,22	NU	31★	41,42	NU	51★	61,62, 63	P61, P62	71★	81,82	NU	11★	31★	NU	51★	71★	43★
RED		128			101			134			107							A104
YELLOW	*	129		*	102		*	135		*	108							
GREEN		130			103			136			109							
RED ARROW													A121	A124		A114	A101	
YELLOW ARROW													A122	A125		A115	A102	A105
FLASHING YELLOW ARROW													A123	A126		A116	A103	A106
GREEN ARROW	127			118			133			124								
✋									119									
🚶									121									

NU = Not Used

* Denotes install load resistor. See load resistor installation detail this sheet.

★ See pictorial of head wiring in detail this sheet.

FYA SIGNAL WIRING DETAIL

(wire signal heads as shown)

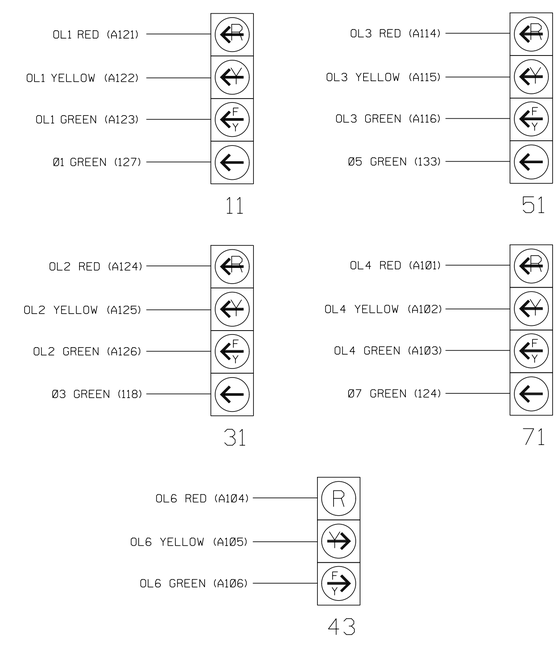

INPUT FILE POSITION LAYOUT

(front view)

		1	2	3	4	5	6	7	8	9	10	11	12	13	14
FILE "I"	U	Ø1 1A	Ø2 2A	SLOT EMPTY	SLOT EMPTY	Ø3 3A	Ø4 4A	SLOT EMPTY	SLOT EMPTY	SLOT EMPTY	SLOT EMPTY	SLOT EMPTY	SLOT EMPTY	Ø6 PED DC ISOLATOR	FS DC ISOLATOR
	L	NOT USED	NOT USED			NOT USED	NOT USED							NOT USED	ST DC ISOLATOR
FILE "J"	U	Ø5 5A	Ø6 6A	SLOT EMPTY	SLOT EMPTY	Ø7 7A	Ø8 8A	SLOT EMPTY	SLOT EMPTY	Ø5 5B	SLOT EMPTY	SLOT EMPTY	SLOT EMPTY	SLOT EMPTY	SLOT EMPTY
	L	NOT USED	NOT USED			NOT USED	NOT USED			NOT USED					

EX.: 1A, 2A, ETC. = LOOP NO.'S

FS = FLASH SENSE
ST = STOP TIME

INPUT FILE CONNECTION & PROGRAMMING CHART

LOOP NO.	LOOP TERMINAL	INPUT FILE POS.	PIN NO.	INPUT POINT	DETECTOR NO.	CALL PHASE	DELAY TIME	EXTEND TIME	EXTEND	ADDED INITIAL	CALL	DELAY DURING GREEN
1A	TB2-1,2	I1U	56	18	1★	1	15.0		X		X	
				-	29★	6	3.0		X		X	X
2A	TB2-5,6	I2U	39	1	2	2			X	X	X	
3A	TB4-5,6	I5U	58	20	7	3	15.0		X		X	
				-	30	8	3.0		X		X	
4A	TB4-9,10	I6U	41	3	8	4			X		X	
5A	TB3-1,2	J1U	55	17	15★	5	15.0		X		X	
				-	31★	2	3.0		X		X	X
5B	TB7-9,10	J9U	59	21	27	5	15.0		X		X	
6A	TB3-5,6	J2U	40	2	16	6			X	X	X	
7A	TB5-5,6	J5U	57	19	21	7	15.0		X		X	
				-	32	4	3.0		X		X	
8A	TB5-9,10	J6U	42	4	22	8	10.0		X		X	
PED PUSH BUTTONS												
P61,P62	TB8-7,9	I13U	68	34	6	PED 6						

NOTE:
INSTALL DC ISOLATOR IN INPUT FILE SLOT I13.

★ For the detectors to work as shown on the signal design plan, see the Vehicle Detector Setup Programming Detail for Alternate Phasing on sheet 2.

INPUT FILE POSITION LEGEND: J2L
FILE J
SLOT 2
LOWER

LOAD RESISTOR INSTALLATION DETAIL

(install resistors as shown)

ACCEPTABLE VALUES	
VALUE (ohms)	WATTAGE
1.5K - 1.9K	25W (min)
2.0K - 3.0K	10W (min)

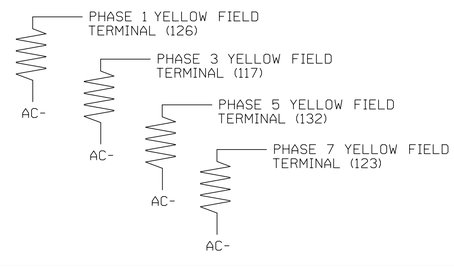

THIS ELECTRICAL DETAIL IS FOR
THE SIGNAL DESIGN: 10-2507
DESIGNED: APRIL 2024
SEALED: 06/03/2024
REVISED:

PLANS PREPARED IN THE OFFICE OF:
Kimley»Horn
NC License #F-0102
421 Fayetteville Street, Suite 600
Raleigh, NC 27601
(919) 677-2000

Electrical Detail - Sheet 1 of 3

DOCUMENT NOT CONSIDERED FINAL UNLESS ALL SIGNATURES COMPLETED

ELECTRICAL AND PROGRAMMING DETAILS FOR:

Prepared For:
Transportation Mobility and Safety Division
STATE OF NORTH CAROLINA
DEPT. OF TRANSPORTATION
Signals Management Section
750 N.Greenfield Pkwy,Garner,NC 27529

US 21 (Statesville Road) at Bailey Road Extension

Division 10 Mecklenberg County Cornelius

PLAN DATE: April 2024	REVIEWED BY: SL Phillips
PREPARED BY: EE Dogbe	REVIEWED BY:

REVISIONS	INIT.	DATE

SEAL
NORTH CAROLINA PROFESSIONAL SEAL 032607 ENGINEER STACIE L. PHILLIPS

DocuSigned by:
DOCSIGNED BY:
SIGNATURE
6/3/2024
DATE

SIG. INVENTORY NO. 10-2507

6/2/2024 7:49:52 PM elizabeth.dogbe \\kimley-horn.com\CL_RAL1\CHL_PRJ\01103628 - U-6105 (Bailey Rd Ext)\Signals\S4 - Signal Design\10-2507e-2024.dgn