ONSITE CONCRETE WASHOUT STRUCTURE WITH LINER

Kimley»Horn ©2025
200 S. TRYON ST. • CHARLOTTE, NC 28202

PROJECT REFERENCE NO.	SHEET NO.
U-6105	EC-2A

RIGHT-OF-WAY REV.
CONST. REV.

REVISIONS

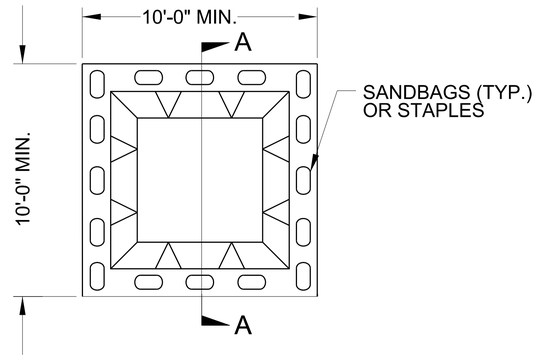

PLAN

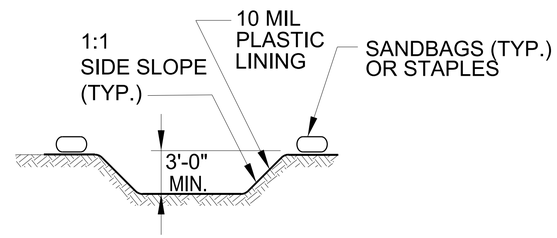

SECTION A-A

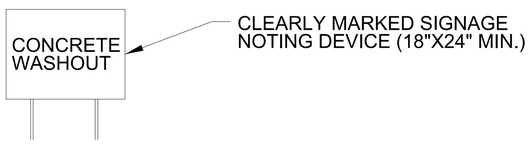

NOTES:
1. ACTUAL LOCATION DETERMINED IN FIELD

2. THE CONCRETE WASHOUT STRUCTURES SHALL BE MAINTAINED WHEN THE LIQUID AND/OR SOLID REACHES 75% OF THE STRUCTURES CAPACITY TO PROVIDE ADEQUATE HOLDING CAPACITY WITH A MINIMUM 12 INCHES OF FREEBOARD.

3.CONCRETE WASHOUT STRUCTURE NEEDS TO BE CLEARLY MARKED WITH SIGNAGE NOTING DEVICE.

BELOW GRADE WASHOUT STRUCTURE

NOT TO SCALE

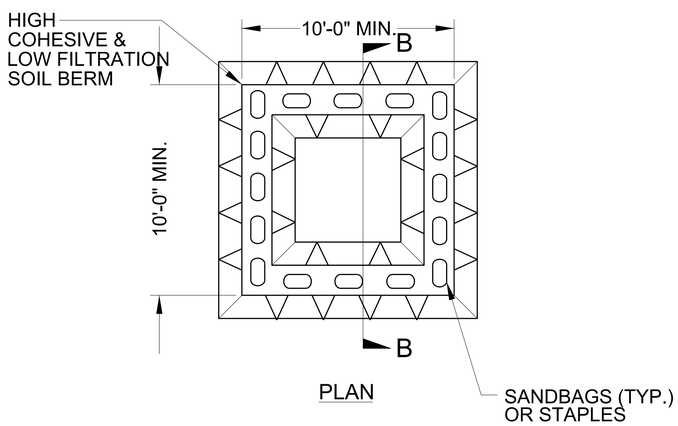

PLAN

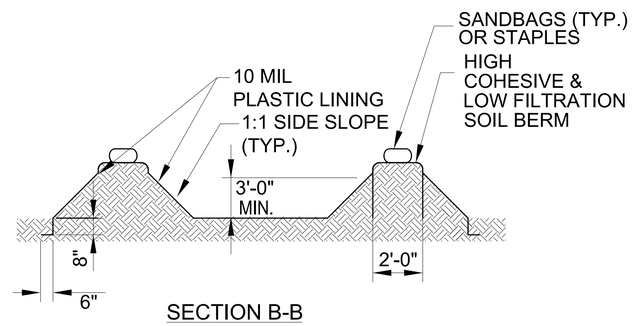

SECTION B-B

NOTES:
1. ACTUAL LOCATION DETERMINED IN FIELD

2. THE CONCRETE WASHOUT STRUCTURES SHALL BE MAINTAINED WHEN THE LIQUID AND/OR SOLID REACHES 75% OF THE STRUCTURES CAPACITY TO PROVIDE ADEQUATE HOLDING CAPACITY WITH A MINIMUM 12 INCHES OF FREEBOARD.

3.CONCRETE WASHOUT STRUCTURE NEEDS TO BE CLEARLY MARKED WITH SIGNAGE NOTING DEVICE.

ABOVE GRADE WASHOUT STRUCTURE

NOT TO SCALE

8/26/2025 K:\CHL_PRJ\01\036528 - U-6105 (Bailey Rd Ext)\Erosion Control\Plan Sheets\U-6105_ec_psh_02&03.dgn