F. A. PROJ. No. F-56-2(20)

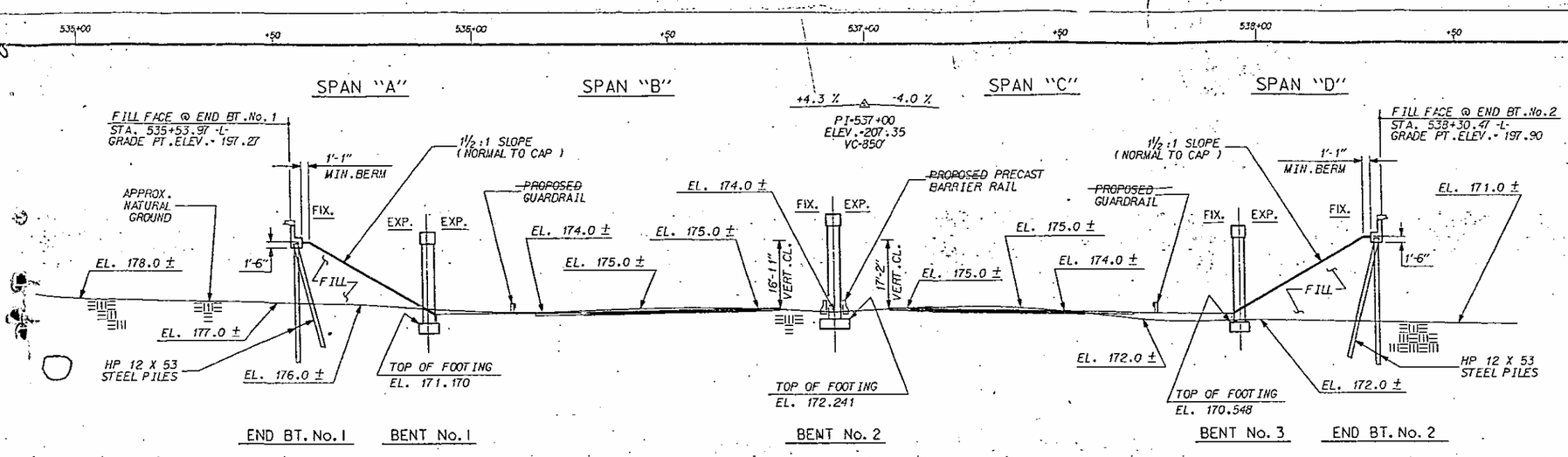

SECTION ALONG ℄ SURVEY -L-

(BENTS ON SECTION @ RT. ANGLES TO BENTS)

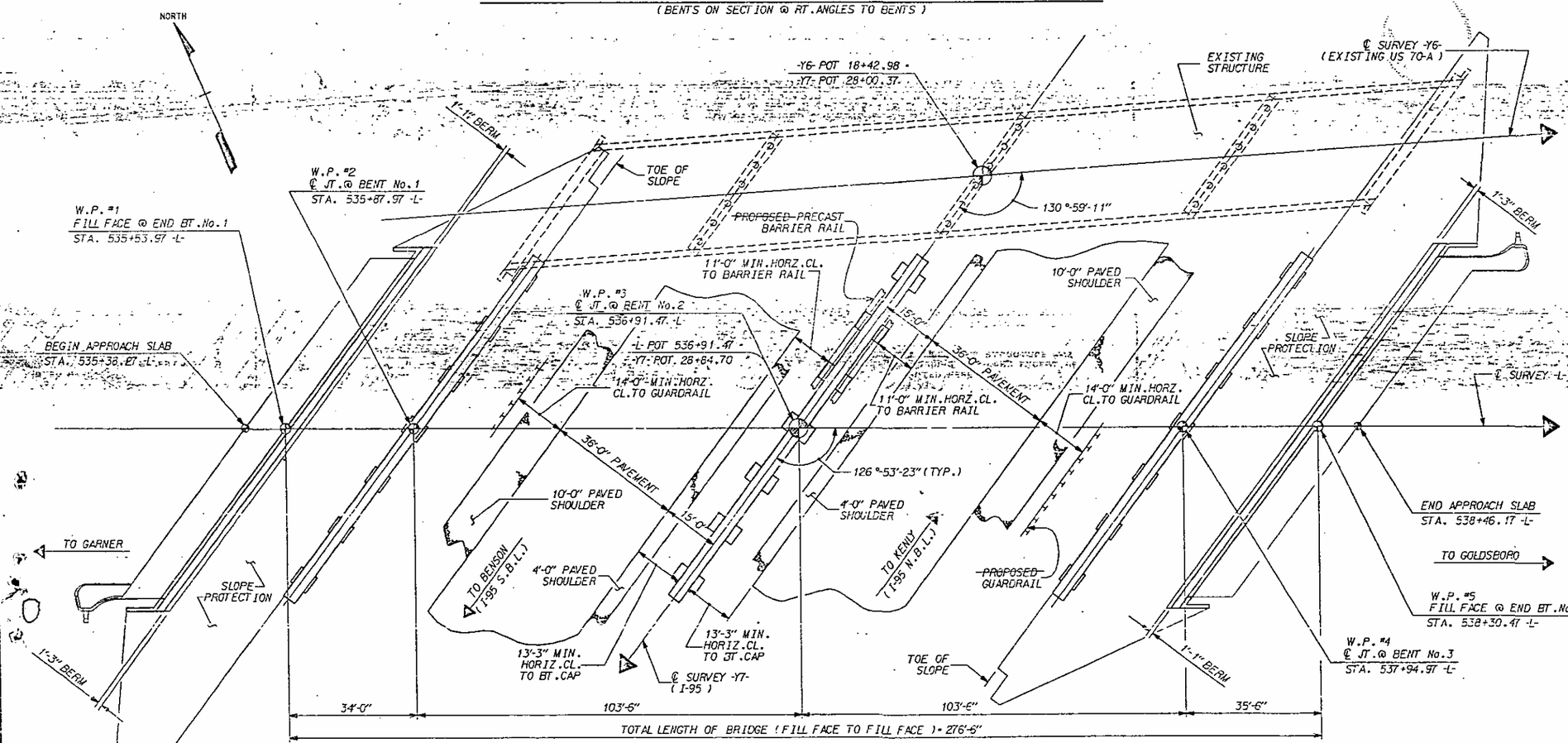

PLAN

(PILES ARE NOT SHOWN IN PLAN VIEW)

NOTES

ASSUMED LIVE LOAD - HS 20-44 OR ALTERNATE LOADING.

FOR OTHER DESIGN DATA AND GENERAL NOTES, SEE SHEET S-N.

ALL STRUCTURAL STEEL FOR THIS STRUCTURE SHALL BE UNPAINTED ASTM A588 STEEL WITH A MINIMUM YIELD STRENGTH OF 50,000 PSI UNLESS OTHERWISE NOTED ON THE PLANS.

FOR REINFORCED CONCRETE DECK SLAB, SEE SPECIAL PROVISIONS.

FOR FABRICATED METAL STAY-IN-PLACE FORMS, SEE SPECIAL PROVISIONS.

FOR CURING BRIDGE DECK SLABS, SEE THE SPECIAL PROVISION "REINFORCED CONCRETE DECK SLAB".

ALL REINFORCING STEEL SHALL BE GRADE 60.

FOR EPOXY PROTECTIVE COATING, SEE SPECIAL PROVISIONS.

FOR SURFACE PREPARATION AND PROTECTION OF UNPAINTED STRUCTURAL STEEL, SEE SPECIAL PROVISIONS.

FOR PROTECTION OF SUBSTRUCTURE, SEE SPECIAL PROVISIONS.

WORK SHALL NOT BE STARTED ON END BENT No.'s 1 & 2 AND BENT No.'s 1 & 3 UNTIL FILL HAS BEEN PLACED.

PILES FOR BENTS & END BENTS SHALL BE DRIVEN TO A MINIMUM BEARING CAPACITY OF 45 TONS EACH.

THE EXISTING PAVEMENT WITHIN THE AREA OF THE END BENT PILES SHALL BE REMOVED AND THE ROADBED SCARIFIED TO A MINIMUM DEPTH OF 2'-0".

AFTER SERVING AS A TEMPORARY CROSSING, THE EXISTING STRUCTURE CONSISTING OF REINFORCED CONCRETE DECK SPANS OF 1 @ 50'-0", 2 @ 67'-0" & 1 @ 50'-0"; CLEAR ROADWAY OF 26'-3" ON REINFORCED CONCRETE BENTS & END BENTS WITH 20" CONCRETE PILES AND LOCATED 84' DOWNSTATION OF LINE -Y7- FROM PROPOSED STRUCTURE SHALL BE REMOVED.
THE EXISTING BRIDGE IS PRESENTLY NOT POSTED FOR LOAD LIMIT. SHOULD THE STRUCTURAL INTEGRITY OF THE BRIDGE DETERIORATE DURING CONSTRUCTION OF THE PROPOSED BRIDGE, A LOAD LIMIT MAY BE POSTED AND MAY BE REDUCED AS FOUND NECESSARY DURING THE LIFE OF THE PROJECT.
SEE SPECIAL PROVISIONS.

FOR MAINTENANCE OF TRAFFIC, SEE SPECIAL PROVISIONS.

THE SUBSTRUCTURE OF THE EXISTING BRIDGE INDICATED ON THE PLANS IS FROM THE BEST INFORMATION AVAILABLE. SINCE THIS INFORMATION IS SHOWN FOR THE CONVENIENCE OF THE CONTRACTOR, THE CONTRACTOR SHALL HAVE NO CLAIM WHATSOEVER AGAINST THE DEPARTMENT OF TRANSPORTATION FOR ANY DELAYS OR ADDITIONAL COST INCURRED BASED ON DIFFERENCES BETWEEN THE EXISTING BRIDGE SUBSTRUCTURE SHOWN ON THE PLANS AND THE ACTUAL CONDITIONS AT THE PROJECT SITE.

I HEREBY CERTIFY THAT THIS STRUCTURE WAS CONSTRUCTED ACCORDING TO PLANS EXCEPT AS NOTED HEREIN.

SIGNATURE: [illegible] DATE: 2-27-92
RESIDENT ENGINEER

Brg #42

PROJECT NO. B. 1236903
JOHNSTON COUNTY
STATION: 536+91.47 -L-

SHEET 1 OF 2 Replaces Bridge #42

STATE OF NORTH CAROLINA
DEPARTMENT OF TRANSPORTATION
RALEIGH

GENERAL DRAWING
BRIDGE OVER I-95
ON US 70-A
BETWEEN GOLDSBORO & GARNER

REVISIONS								SHEET NO.
NO.	BY:	DATE:	NO.	BY:	DATE:			~~S-59~~ 214
1			3					TOTAL SHEETS
2			4					~~107~~

DRAWN BY: MIKE BRITT DATE: 2-15-88
CHECKED BY: DAVID B. SIMPSON, JR DATE: 4-28-88

CADD 1492 10 GDR.DGN SMC 12/94 & 92

STR.#10

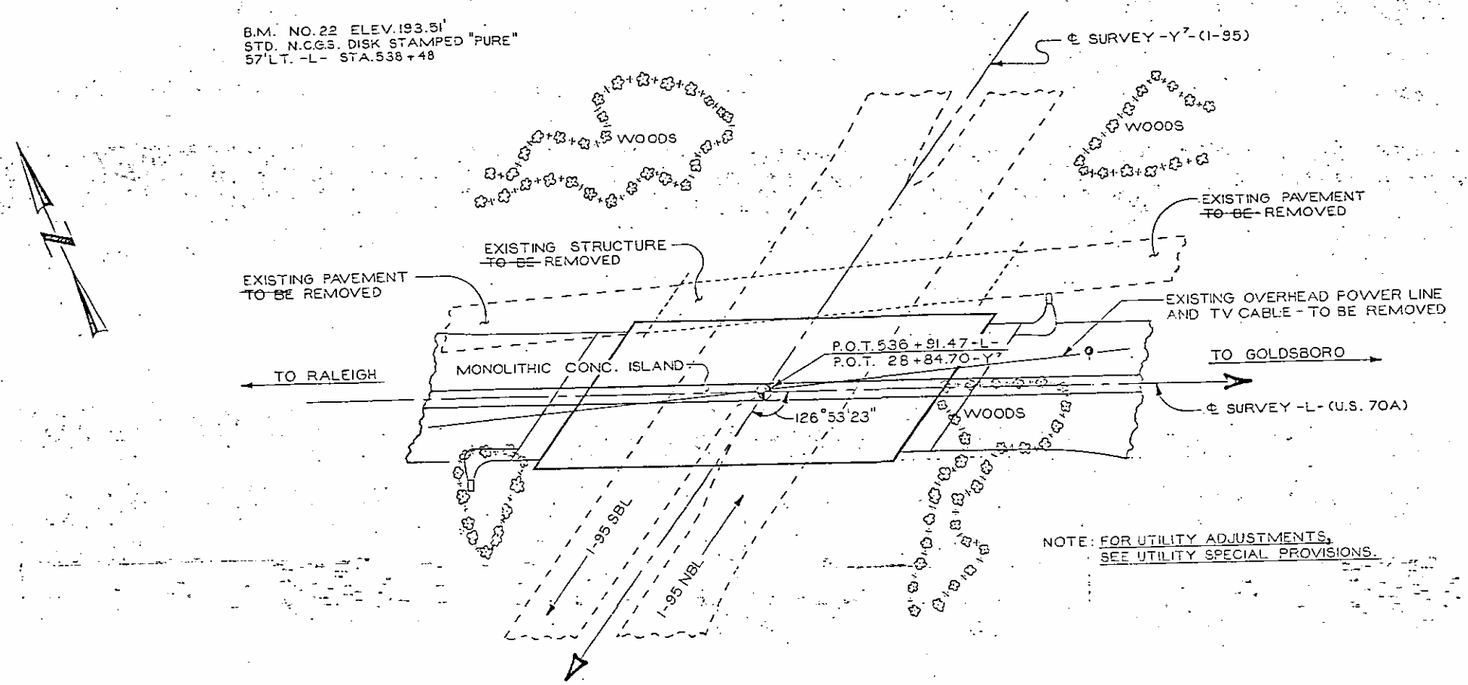

LOCATION SKETCH

TOTAL BILL OF MATERIAL

	REMOVAL OF EXISTING STRUCTURE @ STA. 536+91.47 -L-	FOUNDATION EXCAVATION	REINFORCED CONCRETE DECK SLAB	CLASS A CONCRETE	REINFORCING STEEL	SPIRAL COLUMN REINFORCING STEEL	STRUCTURAL STEEL	HP 12 X 53 STEEL PILES		CONCRETE BARRIER RAIL	BRIDGE APPROACH SLABS	ELASTOMERIC BEARINGS	4" SLOPE PROTECTION	EXPANSION JOINT SEAL	PREFORMED COMPRESSION JOINT SEAL
	LUMP SUM	CU. YDS.	SQ. FT.	CU. YDS.	LBS.	LBS.	APPROX. LBS.	NO.	LIN. FT.	LIN. FT.	LUMP SUM	LUMP SUM	SQ. YDS.	LUMP SUM	LUMP SUM
SUPERSTRUCTURE			24,879				615,800			547.79		LUMP SUM		LUMP SUM	LUMP SUM
END BENT NO. 1				65.9	9,540			14	770		LUMP SUM		760		
BENT NO. 1		175		124.7	21,461	2,739		44	1,540						
BENT NO. 2		115		117.3	23,444	2,739		50	2,000						
BENT NO. 3		185		124.8	21,648	2,932		44	1,760						
END BENT NO. 2				64.6	9,027			14	840		LUMP SUM		805		
TOTAL	LUMP SUM	475	24,879	497.3	85,123	8,410	615,800	165	6,910	547.79	LUMP SUM	LUMP SUM	1,565	LUMP SUM	LUMP SUM

VOID

PROJECT NO. 8.1236903

JOHNSTON COUNTY

STATION: 536+91.47 -L-

SHEET 2 OF 2

STATE OF NORTH CAROLINA
DEPARTMENT OF TRANSPORTATION
RALEIGH

LOCATION SKETCH
AND
BILL OF MATERIAL

REVISIONS						SHEET NO.
NO.	BY	DATE	NO.	BY	DATE	S-80
1			3			TOTAL SHEETS
2			4			107

215

DRAWN BY D. A. GLADDEN DATE 2-12-80
CHECKED BY Don Hodge DATE 5-11-88

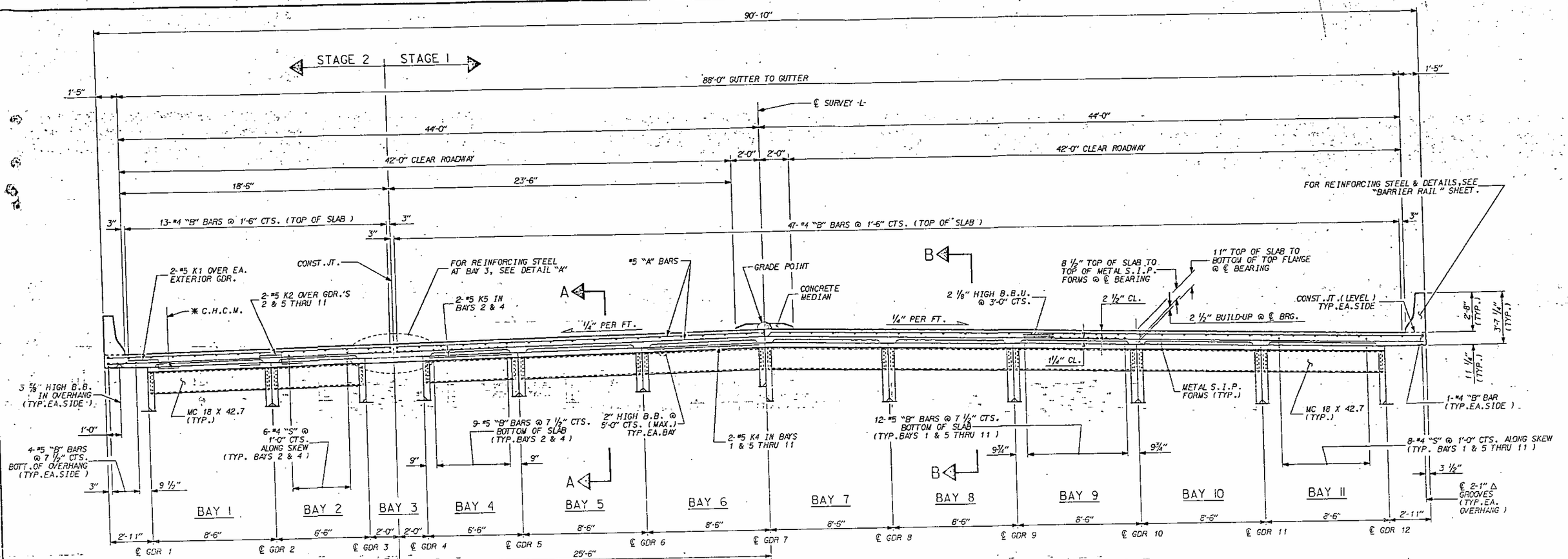

NOTE
THERE ARE NO END BENT OR INTERIOR BENT DIAPHRAGMS IN BAY-3

HALF TYPICAL SECTION
(SHOWING END BENT DIAPHRAGMS IN SPAN "A")

HALF TYPICAL SECTION
(SHOWING INTERIOR BENT DIAPHRAGMS IN SPANS "A" & "B")

TYPICAL SECTION (SPANS "A" & "B")

(FOR INTERMEDIATE DIAPHRAGMS, SEE "STRUCTURAL STEEL DETAILS" SHEETS)

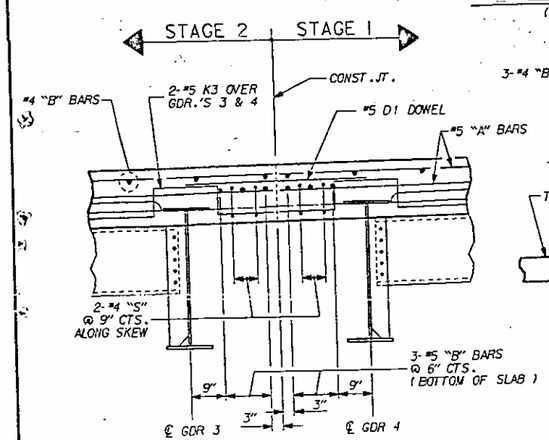

DETAIL "A"

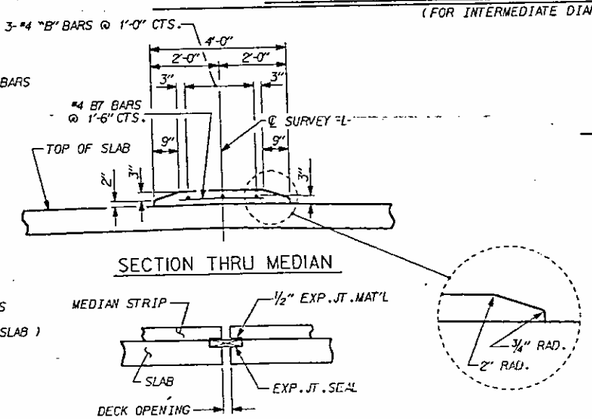

CONCRETE MEDIAN DETAILS

NOTES

✱ PROVIDE CONTINUOUS HIGH CHAIR FOR METAL DECK (C.H.C.M.) @ 4'-0" CENTERS WITH LEG SPACING TO MATCH THE PITCH OF THE FORM AND WITH A HEIGHT TO SUPPORT THE BOTTOM LAYER OF SLAB REINFORCEMENT A CLEAR DISTANCE OF 1 1/4" ABOVE THE TOP OF THE STAY-IN-PLACE FORM.

THE CONTRACTOR'S ATTENTION IS CALLED TO THE FACT THAT THE JOINT IN THE DECK IS CONTINUOUS IN A STRAIGHT LINE THROUGH THE BARRIER RAIL.

BARRIER RAIL IN EACH SPAN SHALL NOT BE CAST UNTIL ALL SLAB CONCRETE IN THAT SPAN HAS BEEN CAST AND HAS REACHED A MINIMUM COMPRESSIVE STRENGTH OF 3,000 PSI.

FOR EPOXY COATED REINFORCING STEEL, SEE SPECIAL PROVISIONS.

#4 D1 DOWELS SHALL BE PLACED IN THE SAME HORIZONTAL PLANE AS THE MAIN SLAB REINFORCING STEEL.

METAL STAY-IN-PLACE FORMS SHALL NOT BE WELDED TO GIRDER FLANGES IN THE ZONES REQUIRING CHARPY V-NOTCH TEST. SEE STRUCTURAL STEEL DETAIL SHEETS.

#5 "G" BARS MAY BE SHIFTED SLIGHTLY AS NECESSARY TO CLEAR DIAPHRAGM AND REINFORCING STEEL.

FOR EXPANSION JOINT SEAL, SEE SPECIAL PROVISIONS.

THE TOPS OF ALL EXPANSION JOINT SEALS SHALL BE SET 1/4" BELOW THE TOP OF THE SLAB.

THE EXPANSION JOINT SEAL AT BENT No.1 SHALL BE CAPABLE OF HANDLING A TOTAL THERMAL MOVEMENT, MEASURED PARALLEL TO THE CENTERLINE OF ROADWAY, OF 1 1/4" (5/8" EXPANSION AND 5/8" CONTRACTION FROM A MIDPOINT TEMPERATURE OF 60 DEGREES F).

THE EXPANSION JOINT SEAL AT BENT No.2 SHALL BE CAPABLE OF HANDLING A TOTAL THERMAL MOVEMENT, MEASURED PARALLEL TO THE CENTERLINE OF ROADWAY, OF 1" (1/2" EXPANSION AND 1/2" CONTRACTION FROM A MIDPOINT TEMPERATURE OF 60 DEGREES F).

THE EXPANSION JOINT SEAL AT BENT No.3 SHALL BE CAPABLE OF HANDLING A TOTAL THERMAL MOVEMENT, MEASURED PARALLEL TO THE CENTERLINE OF ROADWAY, OF 3/8" (3/16" EXPANSION AND 3/16" CONTRACTION FROM A MIDPOINT TEMPERATURE OF 60 DEGREES F).

PROJECT NO. 8.1236903
JOHNSTON COUNTY
STATION: 536+91.47 -L-

SHEET 1 OF 2

STATE OF NORTH CAROLINA
DEPARTMENT OF TRANSPORTATION
RALEIGH

SUPERSTRUCTURE

TYPICAL SECTIONS
(SPANS "A" & "B")

REVISIONS								SHEET NO.
NO.	BY:	DATE:	NO.	BY:	DATE:			~~S-61~~ 216
1			3					TOTAL SHEETS
2			4					107

DRAWN BY: MIKE BRITT DATE: 10-22-87
CHECKED BY: DAN HODGES/DBS DATE: 9-17-88

CADD 1492 10 STS.DGN

STR.#10

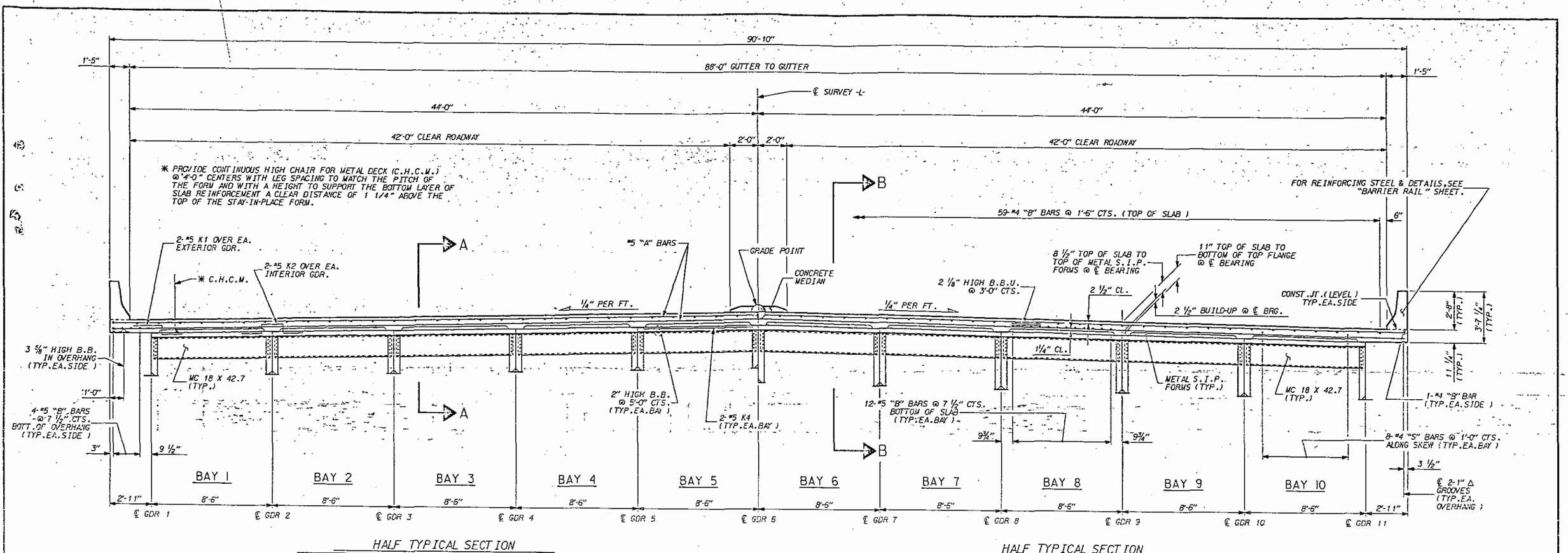

HALF TYPICAL SECTION
(SHOWING END BENT DIAPHRAGMS IN SPAN "D")

HALF TYPICAL SECTION
(SHOWING INTERIOR BENT DIAPHRAGMS IN SPANS "C" & "D")

TYPICAL SECTION (SPANS "C" & "D")

(FOR INTERMEDIATE DIAPHRAGMS, SEE "STRUCTURAL STEEL DETAILS" SHEETS)

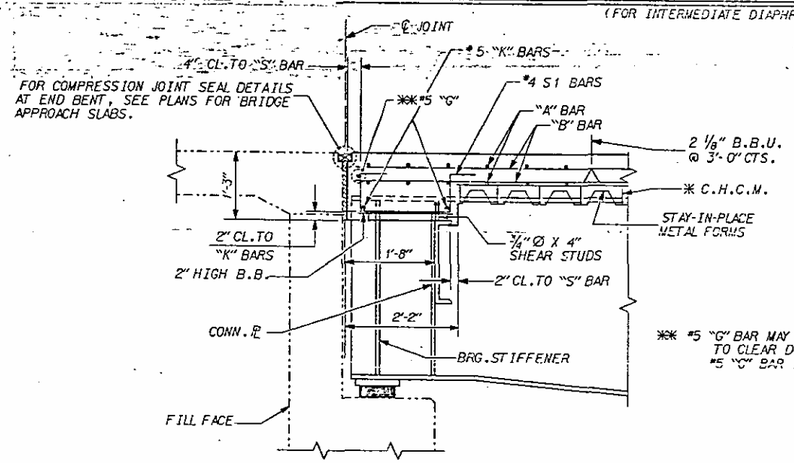

SECTION A-A

** #5 "G" BAR MAY BE SHIFTED SLIGHTLY, AS NECESSARY, TO CLEAR DIAPHRAGM AND REINFORCING STEEL. #5 "G" BAR IS TO BE PLACED PARALLEL TO JOINT.

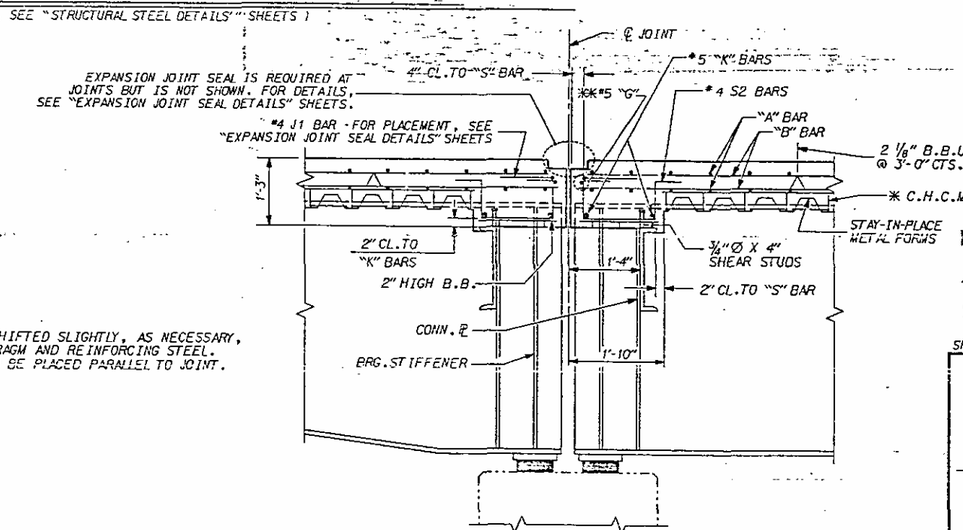

SECTION B-B

PROJECT NO. 8.1236903

JOHNSTON COUNTY

STATION: 536+91.47 -L-

SHEET 2 OF 2

STATE OF NORTH CAROLINA
DEPARTMENT OF TRANSPORTATION
RALEIGH

SUPERSTRUCTURE

TYPICAL SECTIONS
(SPANS "C" & "D")

REVISIONS							SHEET NO.
NO.	BY:	DATE:	NO.	BY:	DATE:		S-62
1			3				TOTAL SHEETS
2			4				107

DRAWN BY: MIKE BRITT DATE: 10-22-87
CHECKED BY: DON HOGE/DBS DATE: 5-17-88

CADD 1492 10 STS.DGN

217

STR.#10

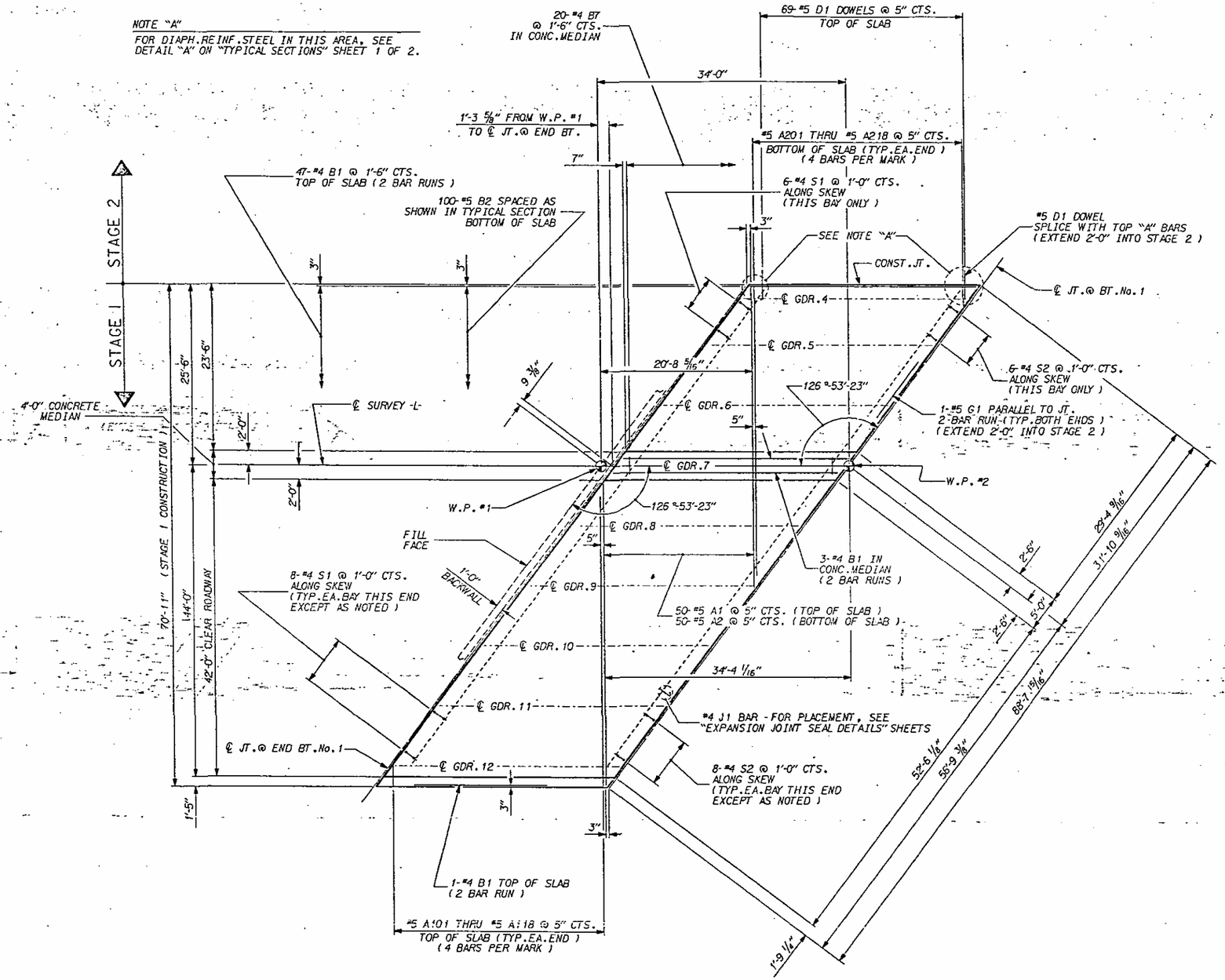

PLAN OF SPAN "A"

(STAGE 1 CONSTRUCTION)

NOTE
FOR "K" BAR REINFORCING STEEL IN DIAPHRAGMS, SEE "TYPICAL SECTIONS" SHEETS.

PROJECT NO. 8.1236903
JOHNSTON COUNTY
STATION: 536+91.47 -L-

STATE OF NORTH CAROLINA
DEPARTMENT OF TRANSPORTATION
RALEIGH

SUPERSTRUCTURE

PLAN OF SPAN "A"

(STAGE 1 CONSTRUCTION)

REVISIONS						SHEET NO.
NO.	BY:	DATE:	NO.	BY:	DATE:	~~C-63~~ 218
1			3			TOTAL SHEETS
2			4			~~107~~

DRAWN BY: MIKE BRITT DATE: 10-30-87
CHECKED BY: Don Hodge DATE: 5-11-89

CADD 1492 10 SPA.DGN

STR.#10

NOTE "A"
FOR DIAPH. REINF. STEEL IN THIS AREA, SEE DETAIL "A" ON "TYPICAL SECTIONS" SHEET 1 OF 2.

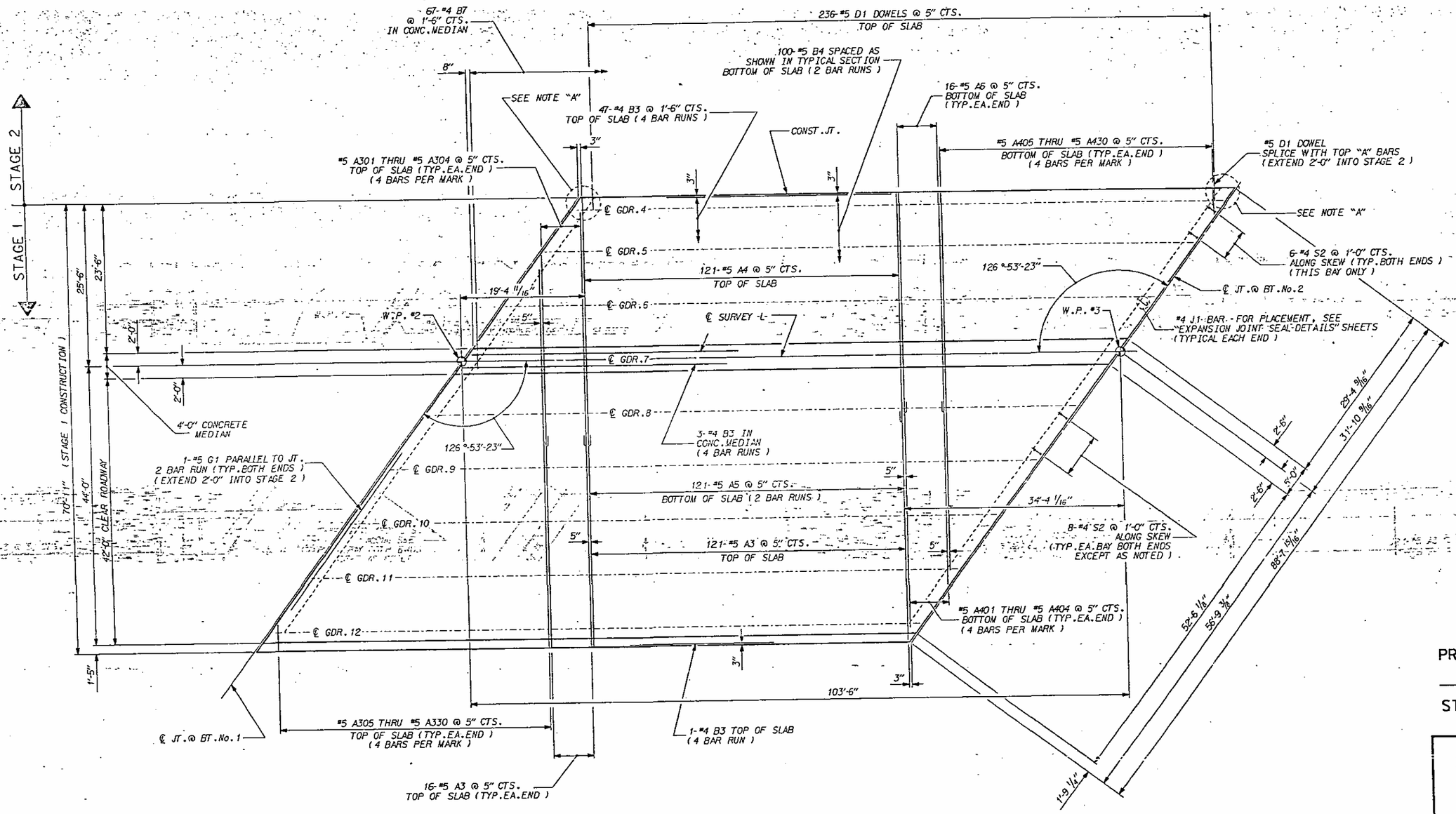

PLAN OF SPAN "B"

(STAGE 1 CONSTRUCTION)

NOTE
FOR "K" BAR REINFORCING STEEL IN DIAPHRAGMS, SEE "TYPICAL SECTIONS" SHEETS.

PROJECT NO. 8.1236903
JOHNSTON COUNTY
STATION: 536+91.47 -L-

STATE OF NORTH CAROLINA
DEPARTMENT OF TRANSPORTATION
RALEIGH

SUPERSTRUCTURE

PLAN OF SPAN "B"

(STAGE 1 CONSTRUCTION)

REVISIONS						SHEET NO.
NO.	BY:	DATE:	NO.	BY:	DATE:	~~S-64~~ 219
1			3			TOTAL SHEETS
2			4			~~197~~

DRAWN BY: MIKE BRITT DATE: 10-30-87
CHECKED BY: Don Hodge DATE: 8-11-88

CADD 1492 10 SPA.DGN

STR.#10

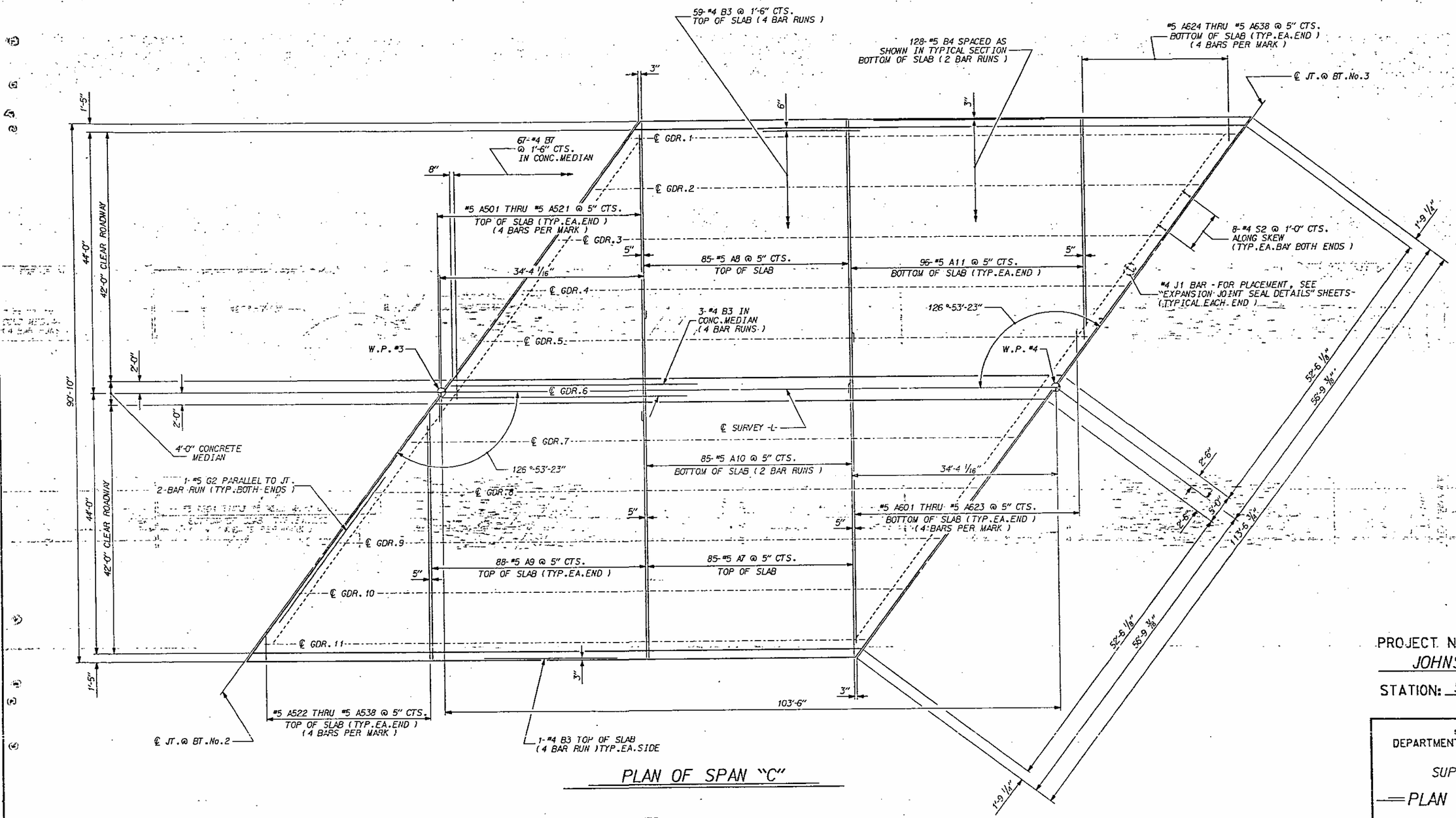

PLAN OF SPAN "C"

NOTE
FOR "K" BAR REINFORCING STEEL IN DIAPHRAGMS, SEE "TYPICAL SECTIONS" SHEETS.

PROJECT NO. 8.1236903
JOHNSTON COUNTY
STATION: 536+91.47 -L-

STATE OF NORTH CAROLINA
DEPARTMENT OF TRANSPORTATION
RALEIGH

SUPERSTRUCTURE

PLAN OF SPAN "C"

REVISIONS						SHEET NO.
NO.	BY:	DATE:	NO.	BY:	DATE:	~~5-65~~ 220
1			3			TOTAL SHEETS
2			4			~~167~~

DRAWN BY: MIKE BRITT DATE: 10-28-87
CHECKED BY: Don Hodge DATE: 5-11-89

CADD 1492 10 SPA.DGN

STR.#10

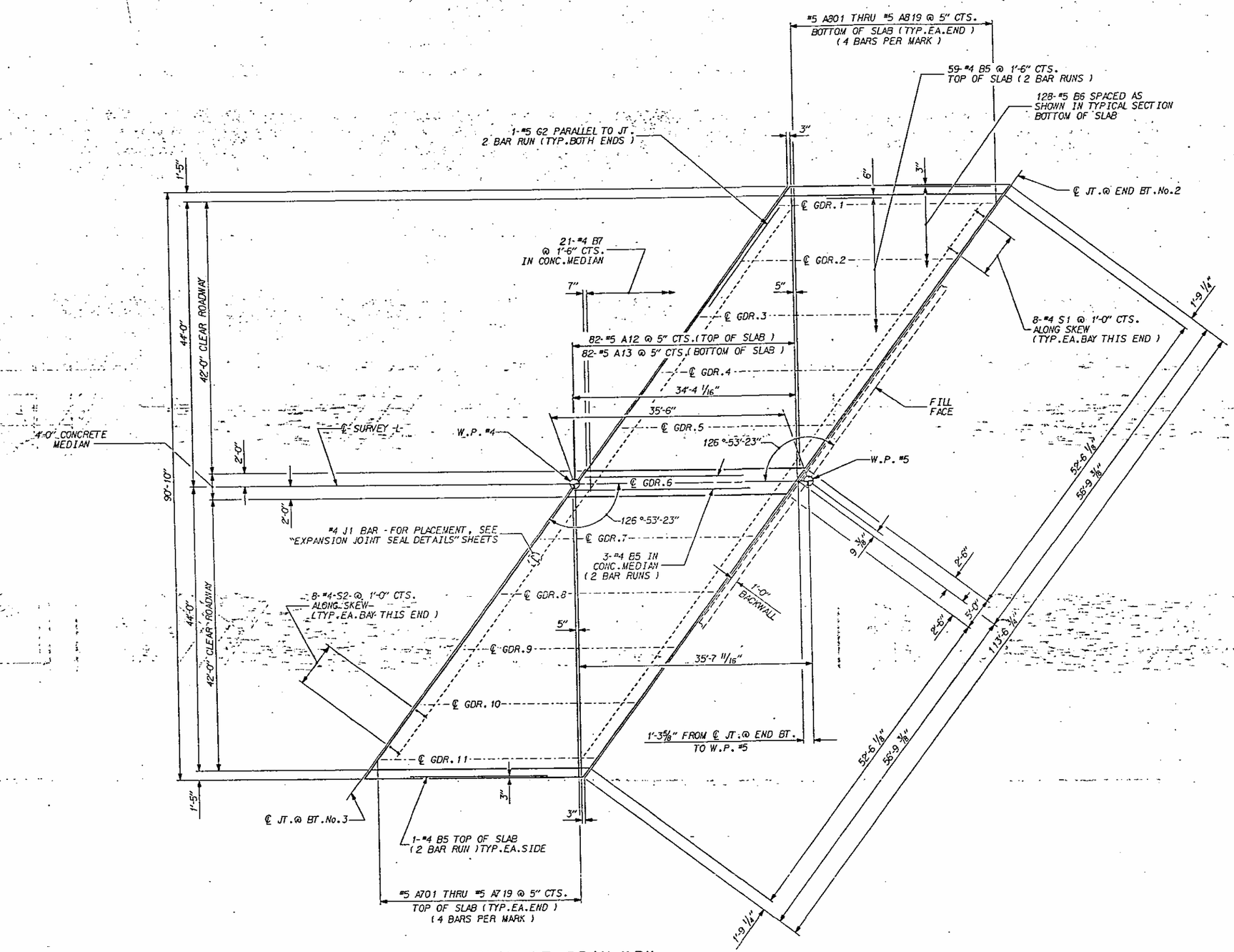

PLAN OF SPAN "D"

NOTE
FOR "K" BAR REINFORCING STEEL IN DIAPHRAGMS, SEE "TYPICAL SECTIONS" SHEETS.

PROJECT-NO. 8.1236903
JOHNSTON COUNTY
STATION: 536+91.47 -L-

STATE OF NORTH CAROLINA
DEPARTMENT OF TRANSPORTATION
RALEIGH

SUPERSTRUCTURE

PLAN OF SPAN "D"

REVISIONS								SHEET NO.
NO.	BY:	DATE:	NO.	BY:	DATE:			S-66 221
1			3					TOTAL SHEETS
2			4					107

DRAWN BY : MIKE BRITT DATE : 10-29-87
CHECKED BY : Don Hodge DATE : 5-11-88
CADD 1492 10 SPA.DGN

STR.#10

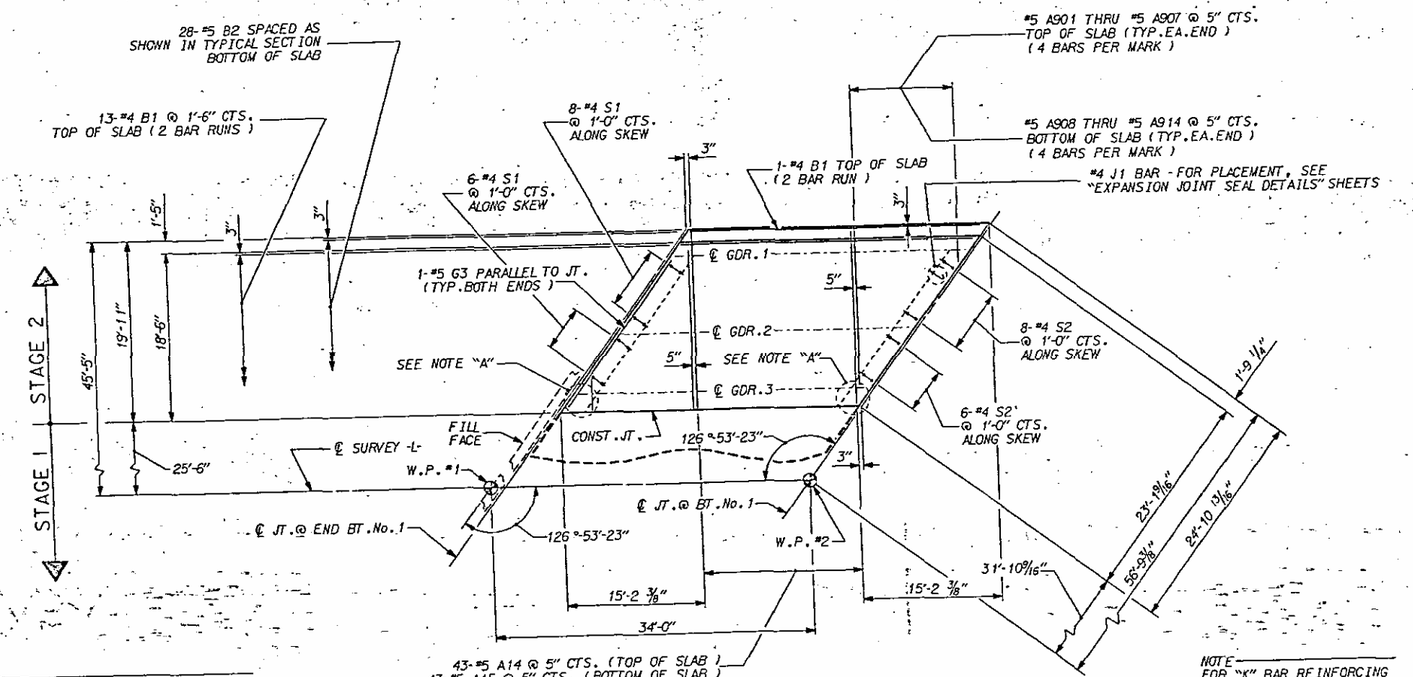

NOTE "A"
FOR DIAPH.REINF.STEEL IN THIS AREA, SEE DETAIL "A" ON "TYPICAL SECTIONS" SHEET 1 OF 2.

NOTE
FOR "K" BAR REINFORCING STEEL IN DIAPHRAGMS, SEE "TYPICAL SECTIONS" SHEETS.

PLAN OF SPAN "A"

(STAGE 2 CONSTRUCTION)

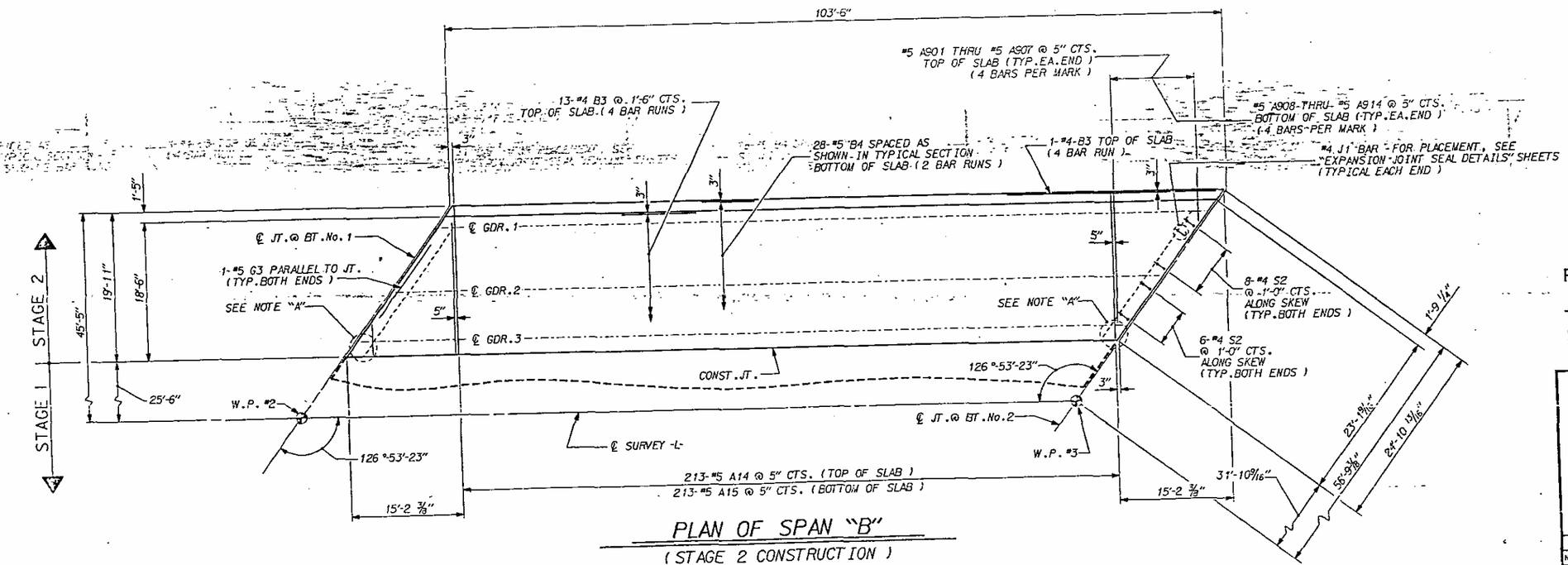

PLAN OF SPAN "B"

(STAGE 2 CONSTRUCTION)

PROJECT NO. 8.1236903
JOHNSTON COUNTY
STATION: 536+91.47 -L-

STATE OF NORTH CAROLINA
DEPARTMENT OF TRANSPORTATION
RALEIGH

SUPERSTRUCTURE

PLAN OF SPAN "A" & "B"

(STAGE 2 CONSTRUCTION)

REVISIONS								SHEET NO.
NO.	BY:	DATE:	NO.	BY:	DATE:			~~5-67~~ 222
1			3					TOTAL SHEETS
2			4					~~107~~

DRAWN BY : MIKE BRITT DATE : 11-2-87
CHECKED BY : Don Hodge DATE : 5-11-93

CADD 1492 10 SPA.DGN

STR.#10

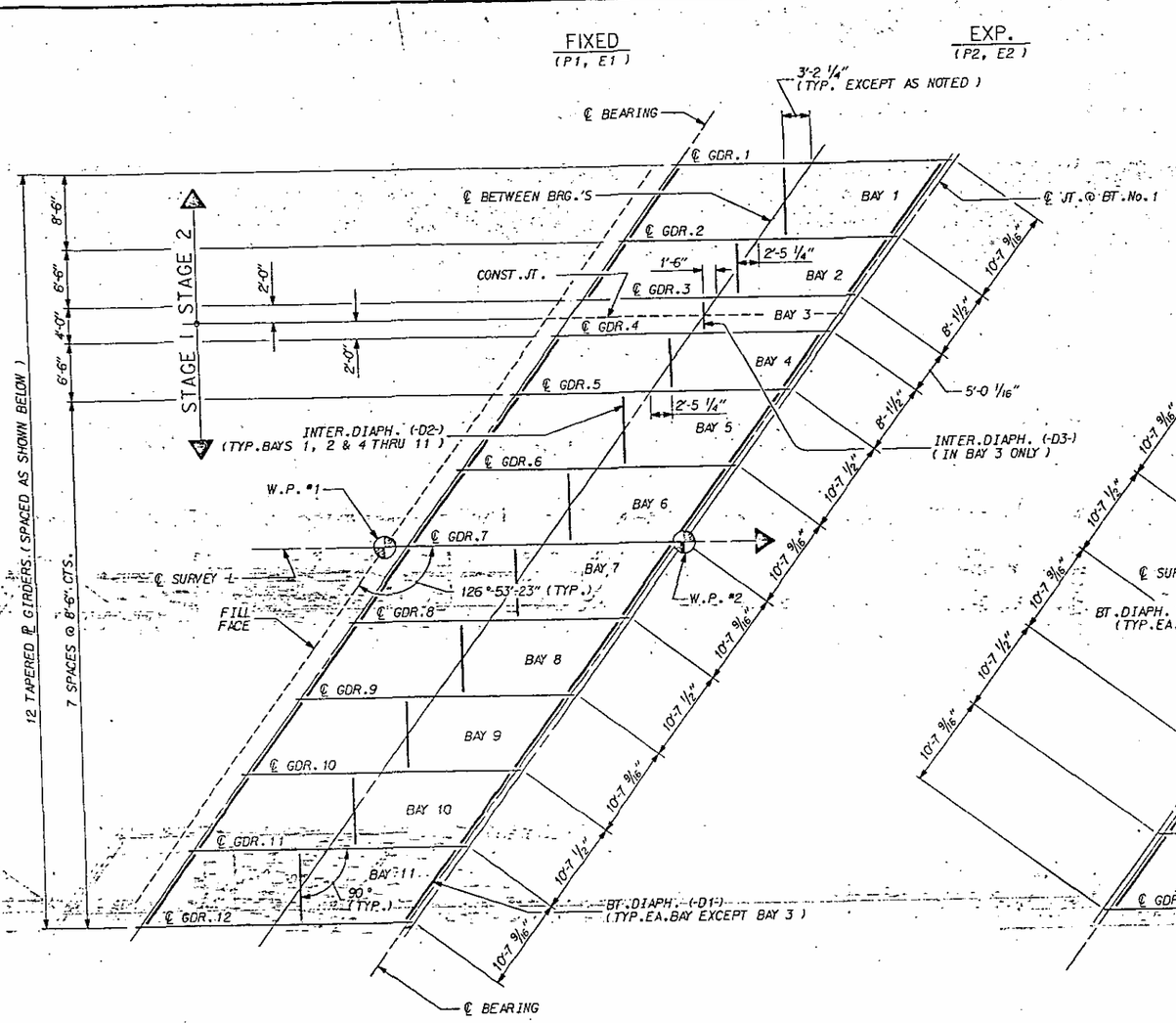

FRAMING PLAN (SPAN "A")

(NOTE -THERE ARE NO BENT DIAPHRAGMS IN BAY 3 OF THIS SPAN)

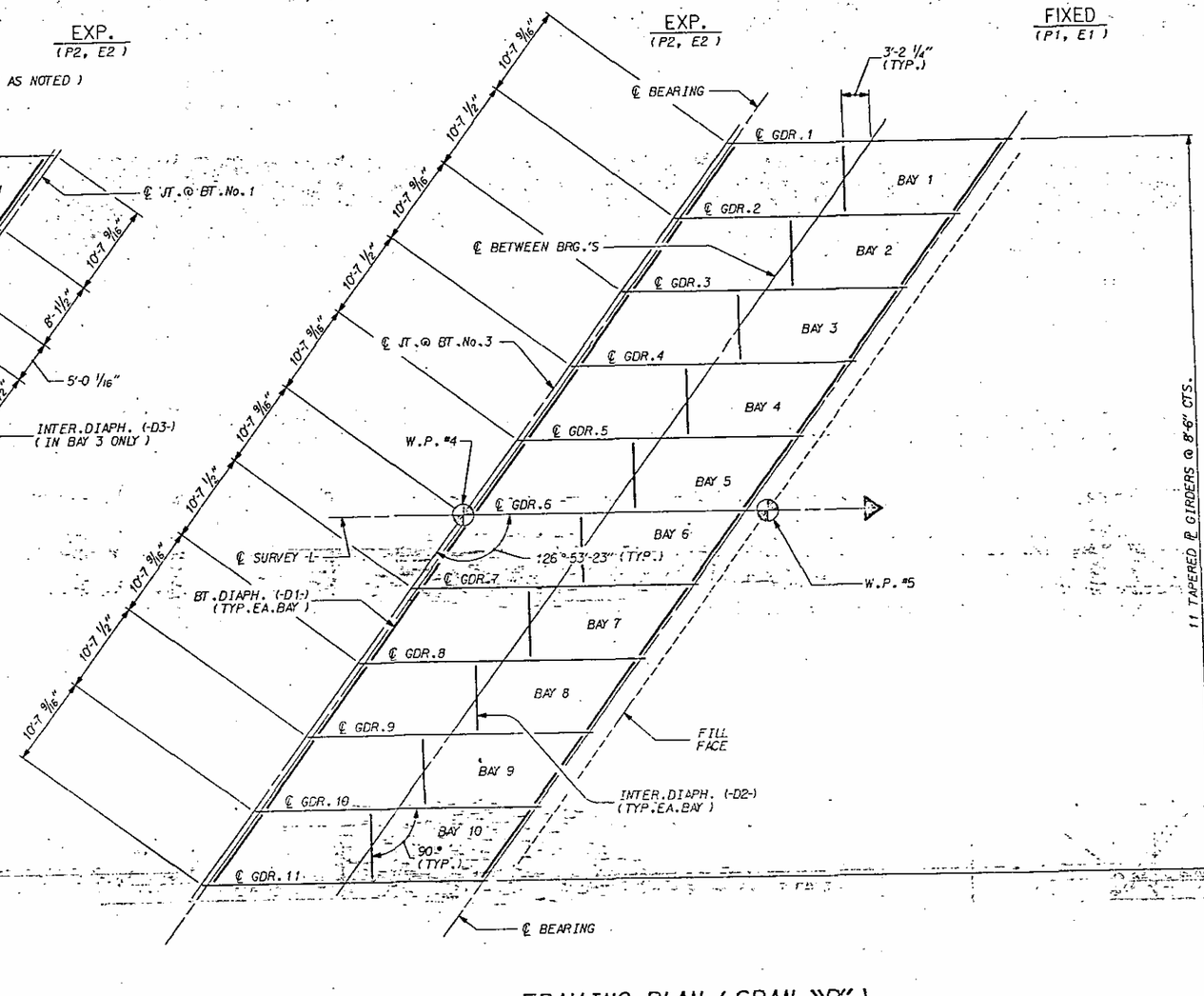

FRAMING PLAN (SPAN "D")

(NOTE -THERE IS NO STAGE CONSTRUCTION IN THIS SPAN)

PROJECT NO. 8.1236903

JOHNSTON COUNTY

STATION: 536+91.47 -L-

SHEET 1 OF 3

STATE OF NORTH CAROLINA
DEPARTMENT OF TRANSPORTATION
RALEIGH

SUPERSTRUCTURE

FRAMING PLAN

(SPANS "A" & "D")

REVISIONS								SHEET NO.
NO.	BY:	DATE:	NO.	BY:	DATE:			5 58
1			3					TOTAL SHEETS
2			4					107

223

DRAWN BY: MIKE BRITT DATE: 11-12-87
CHECKED BY: Don Hodge DATE: 5-11-88

CADD 1492 10 LOS.DGN

STR.#10

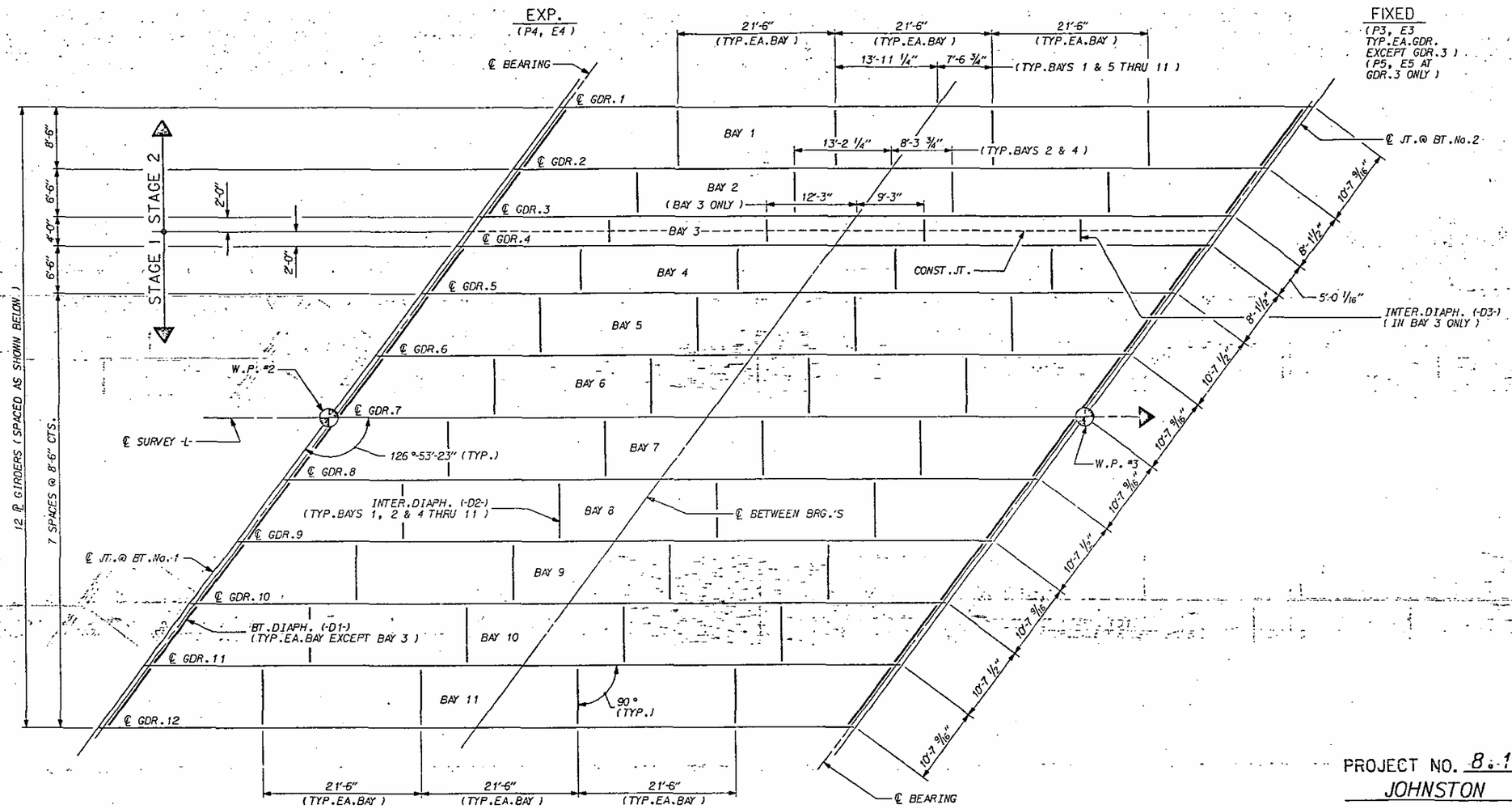

FRAMING PLAN (SPAN "B")

(NOTE - THERE ARE NO BENT DIAPHRAGMS IN BAY 3 OF THIS SPAN)

PROJECT NO. 8.1236903
JOHNSTON COUNTY
STATION: 536+91.47 -L-

SHEET 2 OF 3

STATE OF NORTH CAROLINA
DEPARTMENT OF TRANSPORTATION
RALEIGH

SUPERSTRUCTURE

FRAMING PLAN
(SPAN "B")

REVISIONS						SHEET NO.
NO.	BY:	DATE:	NO.	BY:	DATE:	~~S-69~~ 224
1			3			TOTAL SHEETS
2			4			~~107~~

DRAWN BY : MIKE BRITT DATE : 11-23-87
CHECKED BY : Don Hodge DATE : 5-11-99

CADD 1492 10 LOS.DGN

STR.#10

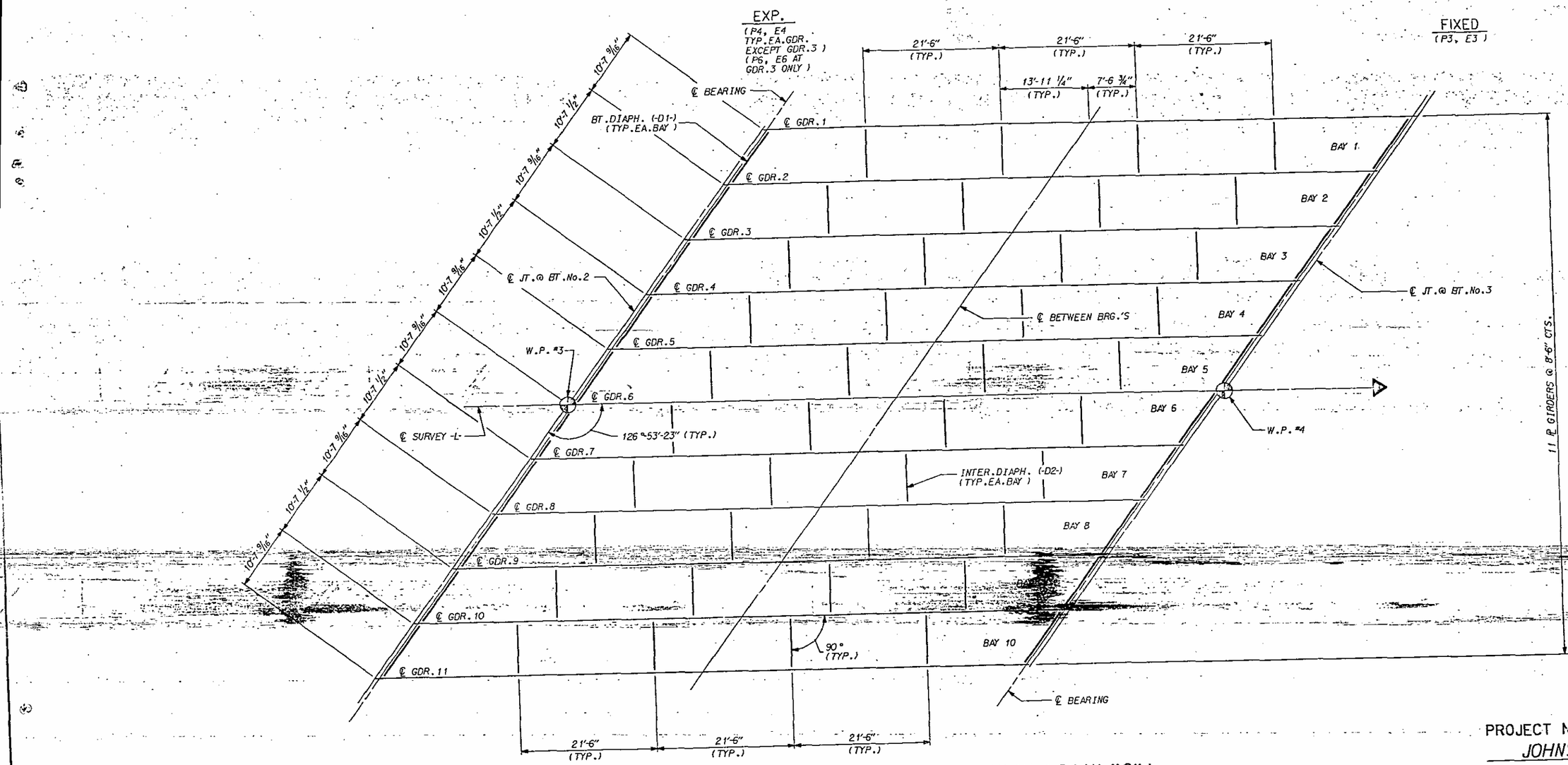

FRAMING PLAN (SPAN "C")

(NOTE -THERE IS NO STAGE CONSTRUCTION IN THIS SPAN)

PROJECT NO. 8.1236903
JOHNSTON COUNTY
STATION: 536+91.47 -L-

SHEET 3 OF 3

STATE OF NORTH CAROLINA
DEPARTMENT OF TRANSPORTATION
RALEIGH

SUPERSTRUCTURE

FRAMING PLAN

(SPAN "C")

REVISIONS						SHEET NO.
NO.	BY:	DATE:	NO.	BY:	DATE:	~~S-70~~ 225
1			3			TOTAL SHEETS
2			4			~~107~~

DRAWN BY : MIKE BRITT DATE : 11-23-87
CHECKED BY : Don Hodge DATE : 5-11-88

CADD 1492 10 LOS.DGN

STR.#10

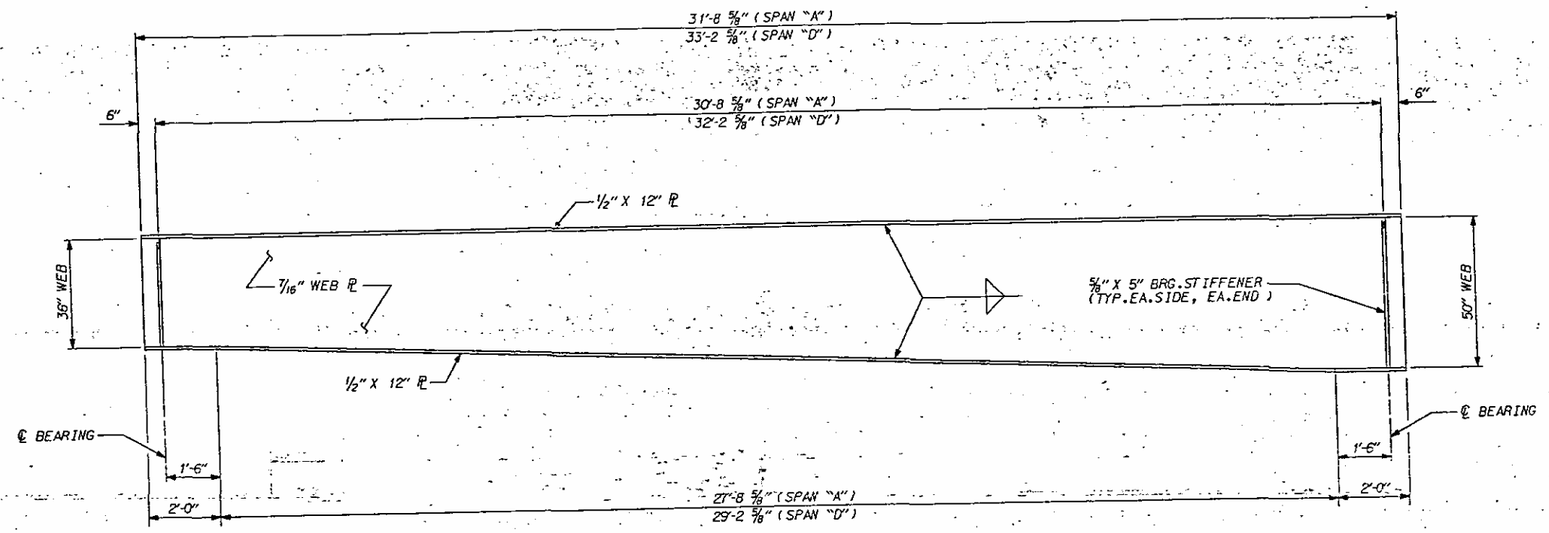

GIRDER ELEVATION

(SPANS "A" & "D")

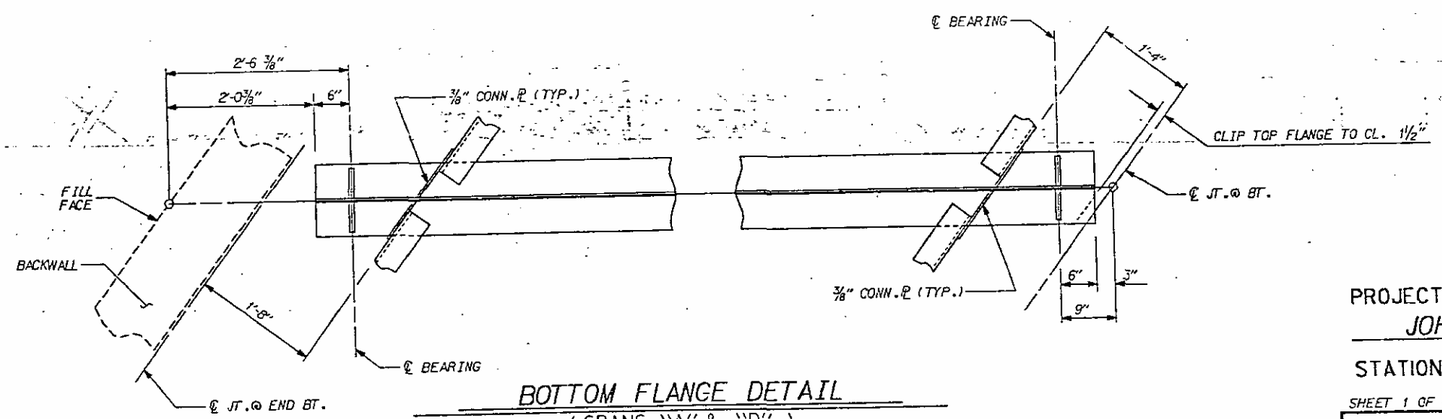

BOTTOM FLANGE DETAIL

(SPANS "A" & "D")

PROJECT NO. 8.1236903

JOHNSTON COUNTY

STATION: 536+91.47 -L-

SHEET 1 OF 4

STATE OF NORTH CAROLINA
DEPARTMENT OF TRANSPORTATION
RALEIGH

SUPERSTRUCTURE

STRUCTURAL STEEL DETAILS

REVISIONS						SHEET NO.
NO.	BY:	DATE:	NO.	BY:	DATE:	~~S-71~~ 226
1			3			TOTAL SHEETS
2			4			~~107~~

DRAWN BY : MIKE BRITT DATE : 11-10-87
CHECKED BY : Don Hodge DATE : 5-11-88

CADD 1492 10 SSD.DGN

STR.#10

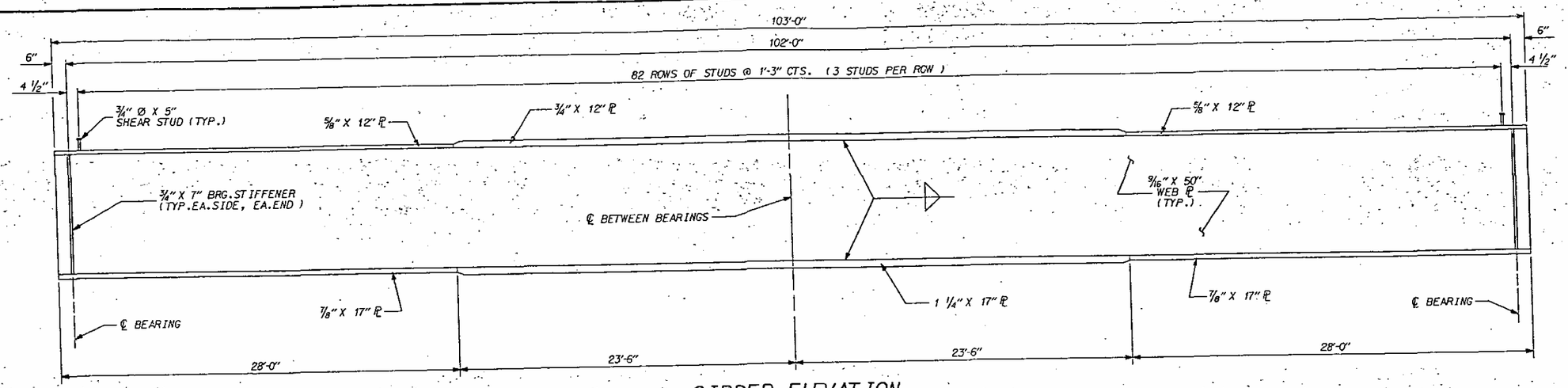

GIRDER ELEVATION

FOR GDR.'S 1,2,4-6 & 8-12 IN SPAN "B"
AND GDR.'S 1,2,4,5, & 7-11 IN SPAN "C"

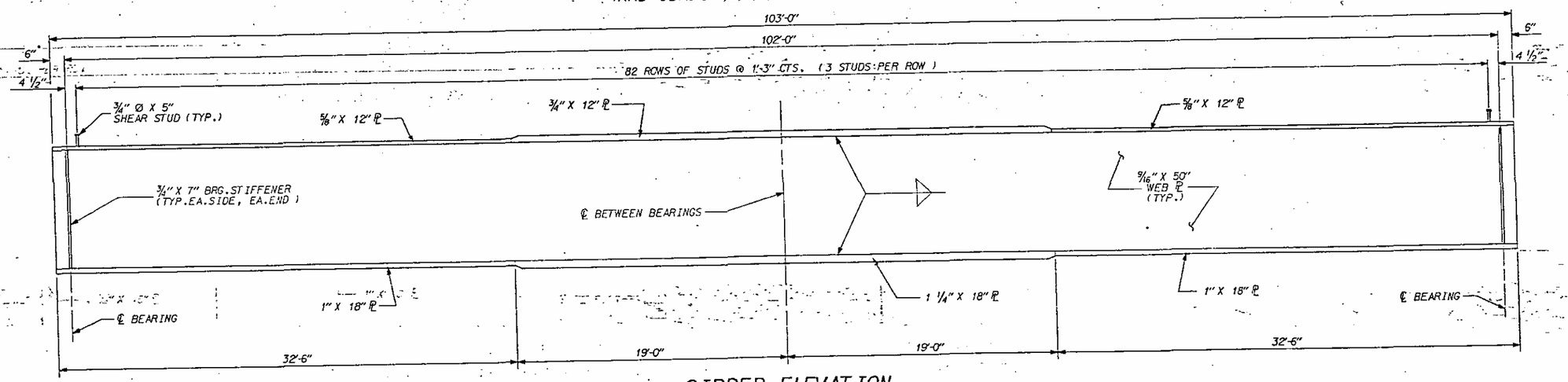

GIRDER ELEVATION

FOR GIRDER 7 IN SPAN "B" & GIRDER 6 IN SPAN "C"

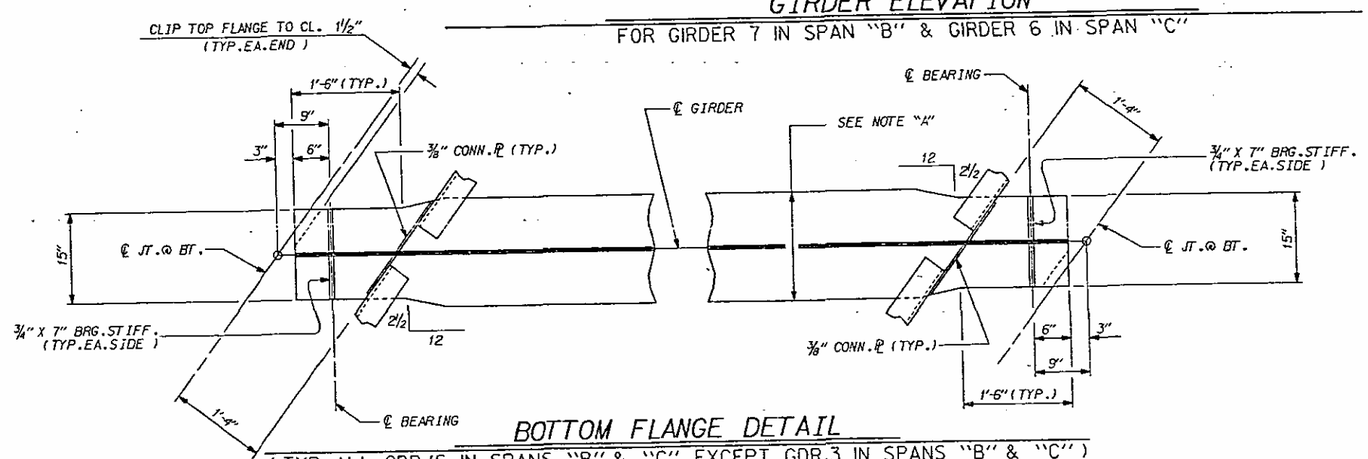

BOTTOM FLANGE DETAIL

(TYP. ALL GDR.'S IN SPANS "B" & "C" EXCEPT GDR.3 IN SPANS "B" & "C")

NOTE "A"
17" BOTTOM FLANGE FOR
GDR.'S 1,2,4-6 & 8-12 (SPAN "B")
& GDR.'S 1,2,4,5 & 7-11 (SPAN "C")

18" BOTTOM FLANGE FOR
GDR.7 (SPAN "B") & GDR.6 (SPAN "C")

PROJECT NO. 8.1236903
JOHNSTON COUNTY
STATION: 536+91.47 -L-

SHEET 2 OF 4

STATE OF NORTH CAROLINA
DEPARTMENT OF TRANSPORTATION
RALEIGH

SUPERSTRUCTURE

STRUCTURAL STEEL DETAILS

REVISIONS						SHEET NO.
NO.	BY:	DATE:	NO.	BY:	DATE:	S-72
1			3			TOTAL SHEETS
2			4			197

227

DRAWN BY: MIKE BRITT DATE: 11-10-87
CHECKED BY: Don Hodge DATE: 5-16-89

CADD 1492 10 SSD.DGN

STR.#10

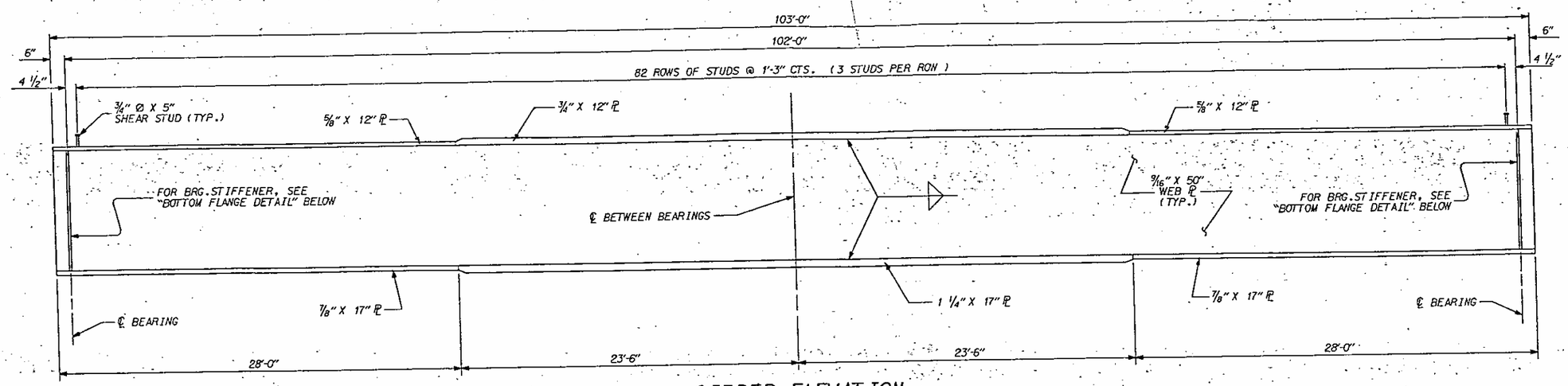

GIRDER ELEVATION

FOR GIRDER 3 IN SPAN "B" AND GIRDER 3 IN SPAN "C"

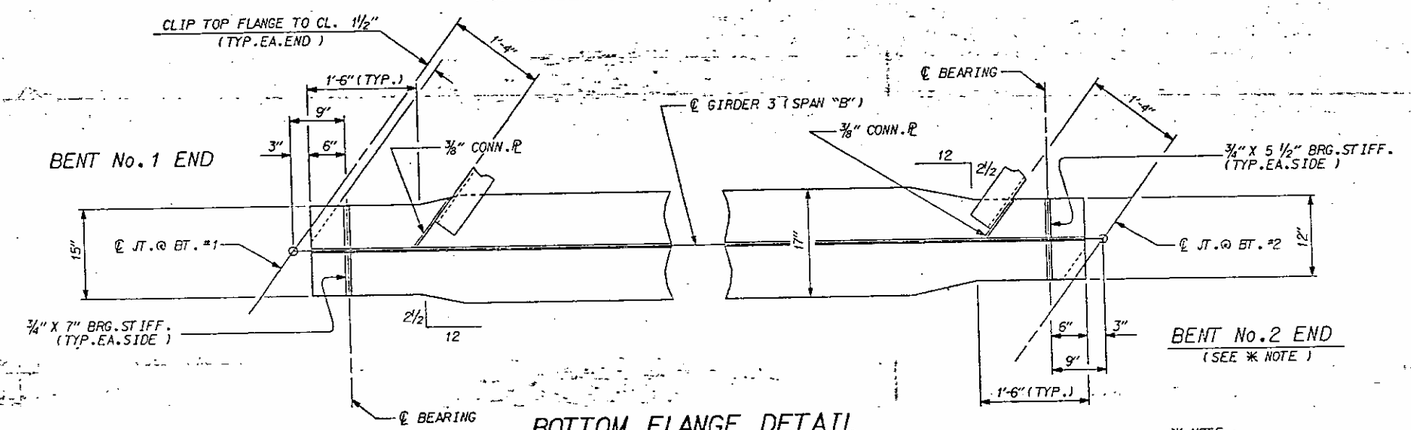

BOTTOM FLANGE DETAIL

(FOR GIRDER 3 IN SPAN "B")

* NOTE:
THE CONTRACTOR'S ATTENTION IS CALLED TO THE FACT THAT THIS BEARING LOCATION HAS A MODIFIED TYPE III ELASTOMERIC BEARING PAD. SEE "SOLE PLATE DETAILS" SHEET.

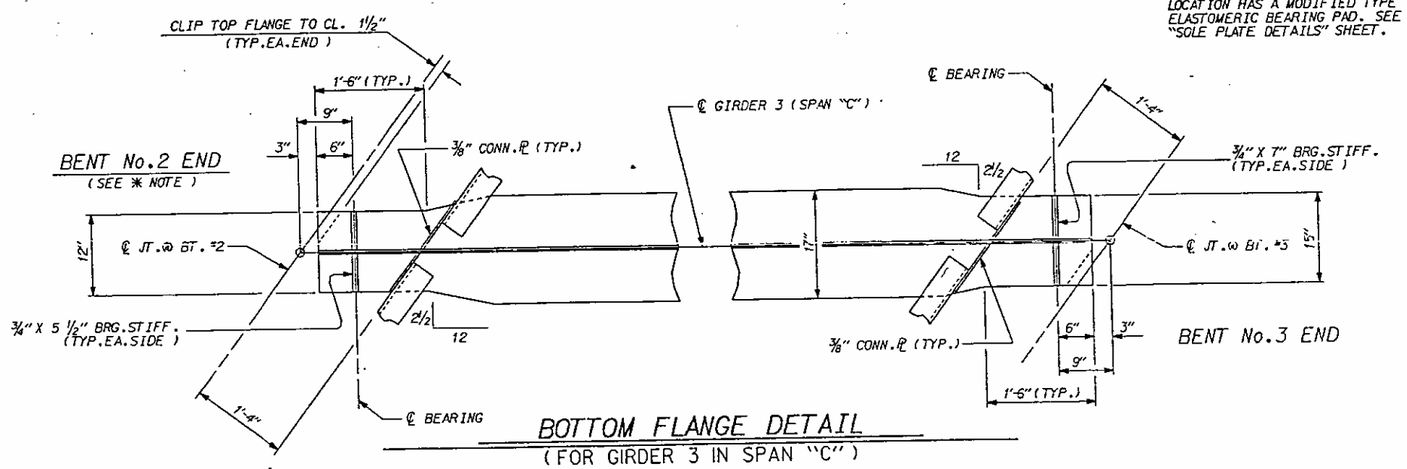

BOTTOM FLANGE DETAIL

(FOR GIRDER 3 IN SPAN "C")

PROJECT NO. 8.1236903
JOHNSTON COUNTY
STATION: 536+91.47 -L-

SHEET 3 OF 4

STATE OF NORTH CAROLINA
DEPARTMENT OF TRANSPORTATION
RALEIGH

SUPERSTRUCTURE

STRUCTURAL STEEL DETAILS

REVISIONS						SHEET NO.
NO.	BY:	DATE:	NO.	BY:	DATE:	S-73
1			3			TOTAL SHEETS
2			4			107

228

DRAWN BY: MIKE BRITT DATE: 2-3-88
CHECKED BY: Don Hodge DATE: 5-12-93

CADD 1492 10 SSD.DGN

STR.#10

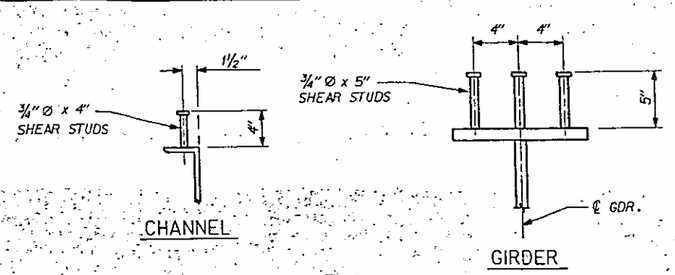

SHEAR STUD DETAILS

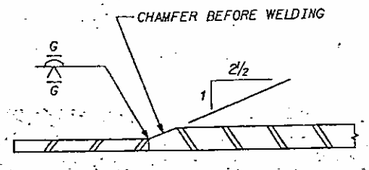

SHOP FLANGE SPLICE

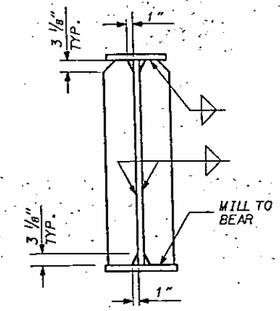

BEARING STIFFENER

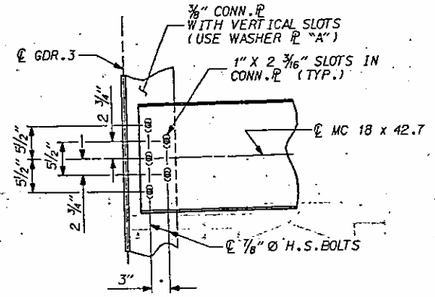

DETAIL "A"

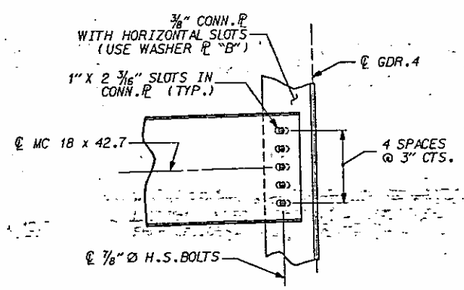

DETAIL "B"

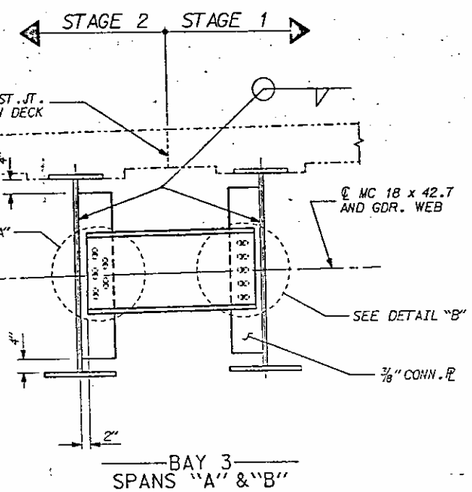

TYPICAL INTERMEDIATE DIAPHRAGM

(-D3-)

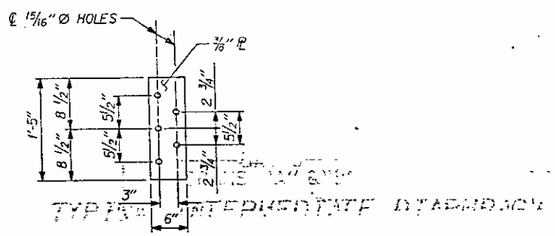

WASHER ℞ "A"

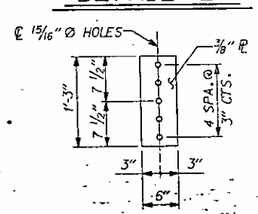

WASHER ℞ "B"

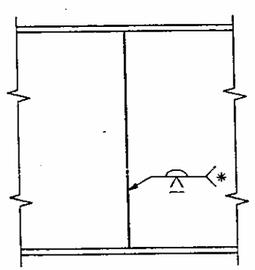

PERMISSIBLE SHOP WEB SPLICE

* GRIND SMOOTH AND FLUSH ON OUTSIDE OF EXTERIOR GIRDERS

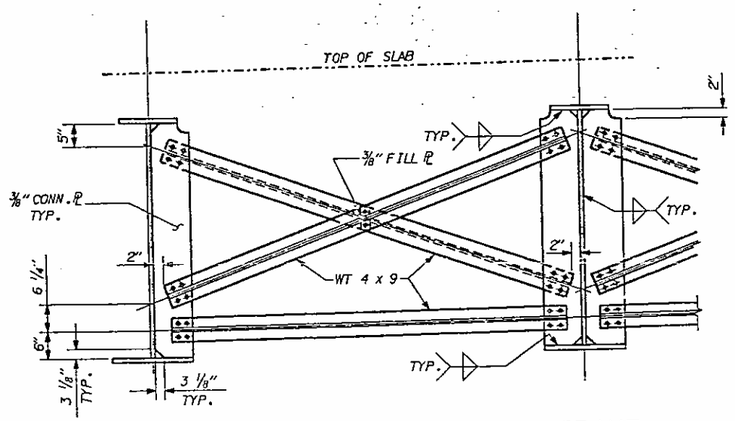

TYPICAL INTERMEDIATE CROSSFRAME

(-D2-)

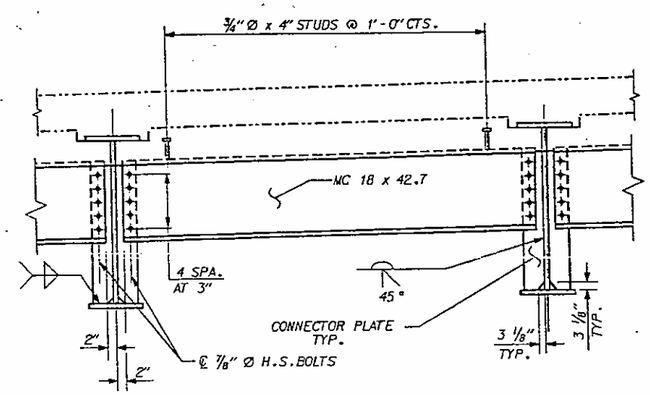

TYPICAL END BENT & BENT DIAPHRAGM

(-D1-)

NOTES

ALL STRUCTURAL STEEL SHALL BE UNPAINTED ASTM A588 STEEL WITH A MINIMUM YIELD STRENGTH OF 50,000 PSI, UNLESS OTHERWISE NOTED ON THE PLANS.

ALL DIMENSIONS SHOWN ARE HORIZONTAL OR VERTICAL, UNLESS OTHERWISE NOTED.

ALL FIELD CONNECTIONS TO BE 7/8" DIA. HIGH STRENGTH BOLTS UNLESS OTHERWISE NOTED.

BEARING STIFFENERS ARE TO BE PLACED NORMAL TO THE WEB OF THE GIRDER AND SHALL BE PLUMB.

A CHARPY V-NOTCH TEST IS REQUIRED FOR WEB PLATES AND BOTTOM FLANGE PLATES FOR ALL GIRDERS. SEE SPECIAL PROVISIONS.

CAMBERED GIRDER LENGTHS SHALL BE ADJUSTED AND BEARINGS ARE TO BE PLACED ON THE CAMBERED GIRDER SO AS TO BE ALIGNED WITH THE ANCHORS AFTER THE DEAD LOAD DEFLECTION HAS OCCURRED. SHOP PLANS SHALL BE PREPARED ACCORDINGLY.

AT FIXED POINTS OF SUPPORT, NUTS FOR ANCHOR BOLTS SHALL BE TIGHTENED FINGER TIGHT AND THEN BACKED OFF 1/2 TURN. THE THREAD OF THE NUT AND BOLT SHALL THEN BE BURRED WITH A SHARP POINTED TOOL.

THE 1 1/4" DIA. AND 1 1/2" DIA. PIPE SLEEVES SHALL BE CUT FROM SCHEDULE 40 PVC PLASTIC PIPE. THE PVC PIPE SHALL MEET THE REQUIREMENTS OF ASTM D1785.

FOR ELASTOMERIC BEARING, SEE SPECIAL PROVISIONS.

SOLE PLATE SHALL BE ASTM A588 AND SHALL NOT BE GALVANIZED. ANCHOR BOLTS AND NUTS SHALL BE IN ACCORDANCE WITH THE STANDARD SPECIFICATIONS.

WHITE LEAD AND TALLOW SHALL NOT BE APPLIED TO THE SURFACES OF THE SOLE PLATE IN CONTACT WITH THE ELASTOMERIC BEARING.

FOR SURFACE PREPARATION AND PROTECTION OF UNPAINTED STRUCTURAL STEEL, SEE SPECIAL PROVISIONS.

SHOP SPLICES ARE PERMITTED TO LIMIT THE MAXIMUM REQUIRED FLANGE PIECE LENGTHS TO 60 FEET AND WEB PIECE LENGTHS TO 45 FEET. PERMITTED FLANGE AND WEB SHOP SPLICES SHALL NOT BE LOCATED WITHIN 15 FEET OF MAXIMUM DEAD LOAD DEFLECTION. KEEP 2 FEET MINIMUM BETWEEN WEB AND FLANGE SHOP SPLICES.

STUDS ON GIRDERS MAY BE SHIFTED UP TO 1" IF NECESSARY TO CLEAR FLANGE SPLICE WELD.

NUTS ON BOLTS FOR CONNECTING CHANNEL TO CONNECTOR ℞ @ INTERMEDIATE DIAPHRAGM (-D3-) SHALL BE LEFT LOOSE FOR THE PURPOSE OF ADJUSTMENT UNTIL BOTH SIDES OF SLAB HAVE BEEN POURED.

PROJECT NO. 8.1236903
JOHNSTON COUNTY
STATION: 536+91.47 -L-

SHEET 4 OF 4

STATE OF NORTH CAROLINA
DEPARTMENT OF TRANSPORTATION
RALEIGH

SUPERSTRUCTURE

STRUCTURAL STEEL DETAILS

REVISIONS							SHEET NO.
NO.	BY:	DATE:	NO.	BY:	DATE:		S-74
1			3				TOTAL SHEETS
2			4				167

229

DRAWN BY: MIKE BRITT DATE: 11-12-87
CHECKED BY: DON HODGE DATE: 8-11-88

CADD 1492 10 SSD.DGN

STR.#10

DEAD LOAD DEFLECTION TABLE FOR TAPERED ℙ GIRDERS	SPAN "A"				
	GIRDERS 1, 6 & 8-12	GIRDERS 2 & 5	GIRDER 3	GIRDER 4	GIRDER 7
DEFLECTION DUE TO WEIGHT OF GIRDER	.001	.001	.001	.001	.001
✱✱ DEFLECTION DUE TO LOAD	.009	.008	.007	.006	.010
TOTAL DEAD LOAD DEFLECTION	.010	.009	.008	.007	.011
VERTICAL CURVE ORDINATE	.012	.012	.012	.012	.012
REQUIRED GIRDER CAMBER	✱	✱	✱	✱	✱

✱✱ INCLUDES SLAB, BUILD-UPS, STAY-IN-PLACE FORMS, BARRIER RAIL AND FUTURE WEARING SURFACE.
✱ NO SHOP CAMBER REQUIRED.

DEAD LOAD DEFLECTIONS FOR SPAN "A" ARE TAKEN AT ℄ BETWEEN BEARINGS.

DEAD LOAD DEFLECTION TABLE FOR GIRDERS

SPAN "B"

	GIRDERS 1 & 12										
TENTH POINTS	BRG.	.1	.2	.3	.4	.5	.6	.7	.8	.9	BRG.
DEFLECTION DUE TO WEIGHT OF GIRDER	0	.020	.038	.052	.060	.063	.060	.052	.038	.020	0
DEFLECTION DUE TO WEIGHT OF SLAB	0	.090	.169	.229	.266	.279	.266	.229	.169	.090	0
DEFLECTION DUE TO WEIGHT OF BARRIER RAIL AND FUTURE WEARING SURFACE	0	.016	.031	.042	.049	.051	.049	.042	.031	.016	0
TOTAL DEAD LOAD DEFLECTION	0	.126	.238	.323	.375	.393	.375	.323	.238	.126	0
VERTICAL CURVE ORDINATE	0	.046	.081	.107	.122	.127	.122	.107	.081	.046	0
REQUIRED CAMBER	0	.172	.319	.430	.497	.520	.497	.430	.319	.172	0

	GIRDER 2										
TENTH POINTS	BRG.	.1	.2	.3	.4	.5	.6	.7	.8	.9	BRG.
DEFLECTION DUE TO WEIGHT OF GIRDER	0	.021	.039	.053	.062	.065	.062	.053	.039	.021	0
DEFLECTION DUE TO WEIGHT OF SLAB	0	.091	.170	.230	.267	.280	.267	.230	.170	.091	0
DEFLECTION DUE TO WEIGHT OF BARRIER RAIL AND FUTURE WEARING SURFACE	0	.013	.024	.033	.038	.040	.038	.033	.024	.013	0
TOTAL DEAD LOAD DEFLECTION	0	.125	.233	.316	.367	.385	.367	.316	.233	.125	0
VERTICAL CURVE ORDINATE	0	.046	.081	.107	.122	.127	.122	.107	.081	.046	0
REQUIRED CAMBER	0	.171	.314	.423	.489	.512	.489	.423	.314	.171	0

	GIRDER 3										
TENTH POINTS	BRG.	.1	.2	.3	.4	.5	.6	.7	.8	.9	BRG.
DEFLECTION DUE TO WEIGHT OF GIRDER	0	.021	.039	.053	.062	.065	.062	.053	.039	.021	0
DEFLECTION DUE TO WEIGHT OF SLAB	0	.069	.129	.174	.202	.212	.202	.174	.129	.069	0
DEFLECTION DUE TO WEIGHT OF BARRIER RAIL AND FUTURE WEARING SURFACE	0	.012	.023	.031	.036	.037	.036	.031	.023	.012	0
TOTAL DEAD LOAD DEFLECTION	0	.102	.191	.258	.300	.314	.300	.258	.191	.102	0
VERTICAL CURVE ORDINATE	0	.046	.081	.107	.122	.127	.122	.107	.081	.046	0
REQUIRED CAMBER	0	.148	.272	.365	.422	.441	.422	.365	.272	.148	0

	GIRDER 4										
TENTH POINTS	BRG.	.1	.2	.3	.4	.5	.6	.7	.8	.9	BRG.
DEFLECTION DUE TO WEIGHT OF GIRDER	0	.021	.039	.053	.062	.065	.062	.053	.039	.021	0
DEFLECTION DUE TO WEIGHT OF SLAB	0	.069	.129	.174	.202	.212	.202	.174	.129	.069	0
DEFLECTION DUE TO WEIGHT OF BARRIER RAIL AND FUTURE WEARING SURFACE	0	.006	.010	.014	.016	.017	.016	.014	.010	.006	0
TOTAL DEAD LOAD DEFLECTION	0	.096	.178	.241	.280	.294	.280	.241	.178	.096	0
VERTICAL CURVE ORDINATE	0	.046	.081	.107	.122	.127	.122	.107	.081	.046	0
REQUIRED CAMBER	0	.142	.259	.348	.402	.421	.402	.348	.259	.142	0

DEAD LOAD DEFLECTION TABLE FOR GIRDERS

SPAN "B"

	GIRDER 5										
TENTH POINTS	BRG.	.1	.2	.3	.4	.5	.6	.7	.8	.9	BRG.
DEFLECTION DUE TO WEIGHT OF GIRDER	0	.021	.039	.053	.062	.065	.062	.053	.039	.021	0
DEFLECTION DUE TO WEIGHT OF SLAB	0	.091	.170	.230	.267	.280	.267	.230	.170	.091	0
DEFLECTION DUE TO WEIGHT OF BARRIER RAIL AND FUTURE WEARING SURFACE	0	.012	.022	.030	.035	.036	.035	.030	.022	.012	0
TOTAL DEAD LOAD DEFLECTION	0	.124	.231	.313	.364	.381	.364	.313	.231	.124	0
VERTICAL CURVE ORDINATE	0	.046	.081	.107	.122	.127	.122	.107	.081	.046	0
REQUIRED CAMBER	0	.170	.312	.420	.486	.508	.486	.420	.312	.170	0

	GIRDERS 6, 8 & 9										
TENTH POINTS	BRG.	.1	.2	.3	.4	.5	.6	.7	.8	.9	BRG.
DEFLECTION DUE TO WEIGHT OF GIRDER	0	.021	.039	.053	.062	.065	.062	.053	.039	.021	0
DEFLECTION DUE TO WEIGHT OF SLAB	0	.103	.192	.260	.303	.317	.303	.260	.192	.103	0
DEFLECTION DUE TO WEIGHT OF BARRIER RAIL AND FUTURE WEARING SURFACE	0	.012	.022	.030	.035	.036	.035	.030	.022	.012	0
TOTAL DEAD LOAD DEFLECTION	0	.136	.253	.343	.400	.418	.400	.343	.253	.136	0
VERTICAL CURVE ORDINATE	0	.046	.081	.107	.122	.127	.122	.107	.081	.046	0
REQUIRED CAMBER	0	.182	.334	.450	.522	.545	.522	.450	.334	.182	0

	GIRDER 7										
TENTH POINTS	BRG.	.1	.2	.3	.4	.5	.6	.7	.8	.9	BRG.
DEFLECTION DUE TO WEIGHT OF GIRDER	0	.021	.039	.053	.062	.065	.062	.053	.039	.021	0
DEFLECTION DUE TO WEIGHT OF SLAB	0	.100	.189	.257	.298	.313	.298	.257	.189	.100	0
DEFLECTION DUE TO WEIGHT OF BARRIER RAIL AND FUTURE WEARING SURFACE	0	.018	.034	.046	.054	.056	.054	.046	.034	.018	0
TOTAL DEAD LOAD DEFLECTION	0	.139	.262	.356	.414	.434	.414	.356	.262	.139	0
VERTICAL CURVE ORDINATE	0	.046	.081	.107	.122	.127	.122	.107	.081	.046	0
REQUIRED CAMBER	0	.185	.343	.463	.536	.561	.536	.463	.343	.185	0

	GIRDERS 10 & 11										
TENTH POINTS	BRG.	.1	.2	.3	.4	.5	.6	.7	.8	.9	BRG.
DEFLECTION DUE TO WEIGHT OF GIRDER	0	.021	.039	.053	.062	.065	.062	.053	.039	.021	0
DEFLECTION DUE TO WEIGHT OF SLAB	0	.103	.192	.260	.303	.317	.303	.260	.192	.103	0
DEFLECTION DUE TO WEIGHT OF BARRIER RAIL AND FUTURE WEARING SURFACE	0	.013	.024	.033	.038	.040	.038	.033	.024	.013	0
TOTAL DEAD LOAD DEFLECTION	0	.137	.255	.346	.403	.422	.403	.346	.255	.137	0
VERTICAL CURVE ORDINATE	0	.046	.081	.107	.122	.127	.122	.107	.081	.046	0
REQUIRED CAMBER	0	.183	.336	.453	.525	.549	.525	.453	.336	.183	0

NOTE:
ALL DEFLECTIONS ARE SHOWN IN DECIMALS OF A FOOT.

PROJECT NO. 8.1236903
JOHNSTON COUNTY
STATION: 536+91.47 -L-

SHEET 1 OF 2

STATE OF NORTH CAROLINA
DEPARTMENT OF TRANSPORTATION
RALEIGH

SUPERSTRUCTURE

DEAD LOAD DEFLECTION TABLES

REVISIONS						SHEET NO.
NO.	BY:	DATE:	NO.	BY:	DATE:	~~S-75~~ 230
1			3			TOTAL SHEETS
2			4			~~197~~

DRAWN BY : MIKE BRITT DATE : 11-17-87
CHECKED BY : Don Hedge DATE : 5-10-88

CAD01492 10 OLD.DGN

STR.#10

DEAD LOAD DEFLECTION TABLE FOR GIRDERS

SPAN "C"

TENTH POINTS	GIRDERS 1 & 11										
	BRG.	.1	.2	.3	.4	.5	.6	.7	.8	.9	BRG.
DEFLECTION DUE TO WEIGHT OF GIRDER	0	.020	.038	.052	.060	.063	.060	.052	.038	.020	0
DEFLECTION DUE TO WEIGHT OF SLAB	0	.090	.169	.229	.266	.279	.266	.229	.169	.090	0
DEFLECTION DUE TO WEIGHT OF BARRIER RAIL AND FUTURE WEARING SURFACE	0	.016	.031	.042	.049	.051	.049	.042	.031	.016	0
TOTAL DEAD LOAD DEFLECTION	0	.126	.238	.323	.375	.393	.375	.323	.238	.126	0
VERTICAL CURVE ORDINATE	0	.046	.081	.107	.122	.127	.122	.107	.081	.046	0
REQUIRED CAMBER	0	.172	.319	.430	.497	.520	.497	.430	.319	.172	0

TENTH POINTS	GIRDERS 2,3,9 & 10										
	BRG.	.1	.2	.3	.4	.5	.6	.7	.8	.9	BRG.
DEFLECTION DUE TO WEIGHT OF GIRDER	0	.021	.039	.053	.062	.065	.062	.053	.039	.021	0
DEFLECTION DUE TO WEIGHT OF SLAB	0	.103	.192	.260	.303	.317	.303	.260	.192	.103	0
DEFLECTION DUE TO WEIGHT OF BARRIER RAIL AND FUTURE WEARING SURFACE	0	.013	.024	.033	.038	.040	.038	.033	.024	.013	0
TOTAL DEAD LOAD DEFLECTION	0	.137	.255	.346	.403	.422	.403	.346	.255	.137	0
VERTICAL CURVE ORDINATE	0	.046	.081	.107	.122	.127	.122	.107	.081	.046	0
REQUIRED CAMBER	0	.183	.336	.453	.525	.549	.525	.453	.336	.183	0

TENTH POINTS	GIRDERS 4,5,7 & 8										
	BRG.	.1	.2	.3	.4	.5	.6	.7	.8	.9	BRG.
DEFLECTION DUE TO WEIGHT OF GIRDER	0	.021	.039	.053	.062	.065	.062	.053	.039	.021	0
DEFLECTION DUE TO WEIGHT OF SLAB	0	.103	.192	.260	.303	.317	.303	.260	.192	.103	0
DEFLECTION DUE TO WEIGHT OF BARRIER RAIL AND FUTURE WEARING SURFACE	0	.012	.022	.030	.035	.036	.035	.030	.022	.012	0
TOTAL DEAD LOAD DEFLECTION	0	.136	.253	.343	.400	.418	.400	.343	.253	.136	0
VERTICAL CURVE ORDINATE	0	.046	.081	.107	.122	.127	.122	.107	.081	.046	0
REQUIRED CAMBER	0	.182	.334	.450	.522	.545	.522	.450	.334	.182	0

TENTH POINTS	GIRDER 6										
	BRG.	.1	.2	.3	.4	.5	.6	.7	.8	.9	BRG.
DEFLECTION DUE TO WEIGHT OF GIRDER	0	.021	.039	.053	.062	.065	.062	.053	.039	.021	0
DEFLECTION DUE TO WEIGHT OF SLAB	0	.100	.189	.257	.298	.313	.298	.257	.189	.100	0
DEFLECTION DUE TO WEIGHT OF BARRIER RAIL AND FUTURE WEARING SURFACE	0	.018	.034	.046	.054	.056	.054	.046	.034	.018	0
TOTAL DEAD LOAD DEFLECTION	0	.139	.252	.356	.414	.434	.414	.356	.252	.139	0
VERTICAL CURVE ORDINATE	0	.046	.081	.107	.122	.127	.122	.107	.081	.046	0
REQUIRED CAMBER	0	.185	.343	.463	.536	.561	.536	.463	.343	.185	0

DEAD LOAD DEFLECTION TABLE FOR TAPERED PL GIRDERS

	SPAN "D"	
	GIRDERS 1-5 & 7-11	GIRDER 6
DEFLECTION DUE TO WEIGHT OF GIRDER	.001	.001
** DEFLECTION DUE TO LOAD	.011	.012
TOTAL DEAD LOAD DEFLECTION	.012	.013
VERTICAL CURVE ORDINATE	.013	.013
REQUIRED GIRDER CAMBER	*	*

** INCLUDES SLAB, BUILD-UPS, STAY-IN-PLACE FORMS, BARRIER RAIL AND FUTURE WEARING SURFACE.
* NO SHOP CAMBER REQUIRED.

DEAD LOAD DEFLECTIONS FOR SPAN "D" ARE TAKEN AT ℄ BETWEEN BEARINGS.

NOTE:
ALL DEFLECTIONS ARE SHOWN IN DECIMALS OF A FOOT.

PROJECT NO. 8.1236903
JOHNSTON COUNTY
STATION: 536+91.47 -L-

SHEET 2 OF 2

STATE OF NORTH CAROLINA
DEPARTMENT OF TRANSPORTATION
RALEIGH

SUPERSTRUCTURE

DEAD LOAD DEFLECTION TABLES

REVISIONS						SHEET NO.
NO.	BY:	DATE:	NO.	BY:	DATE:	S-26
1			3			TOTAL SHEETS
2			4			107

231

DRAWN BY : MIKE BRITT DATE : 11-17-87
CHECKED BY : Dan Hedge DATE : 3-10-88

CADD 1492 10 DLD.DGN

STR.#10

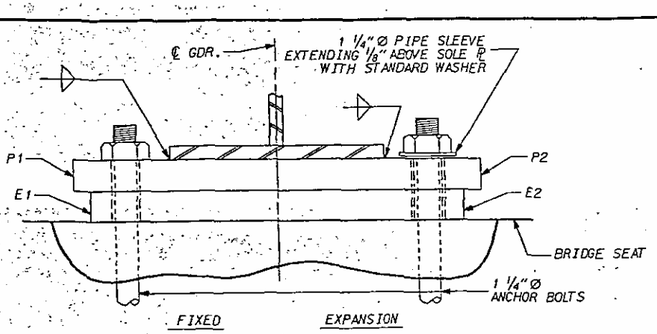

END VIEW

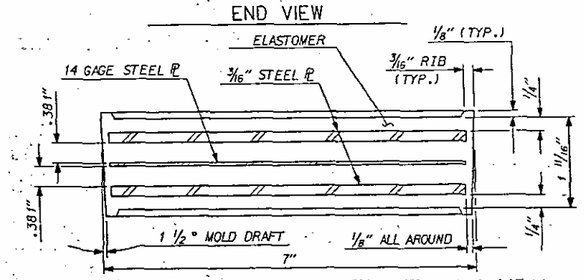

TYPICAL SECTION OF ELASTOMERIC BEARINGS

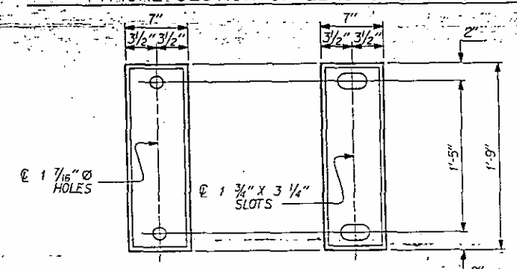

PLAN VIEW OF ELASTOMERIC BEARING

TYPE II

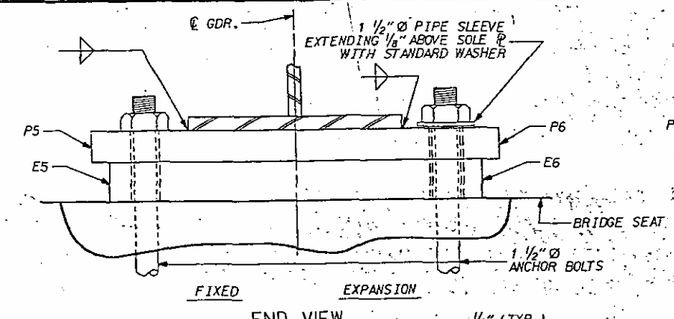

END VIEW

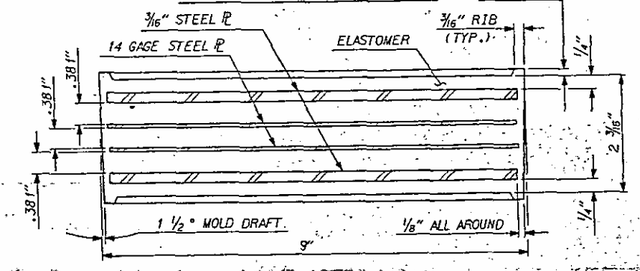

TYPICAL SECTION OF ELASTOMERIC BEARINGS

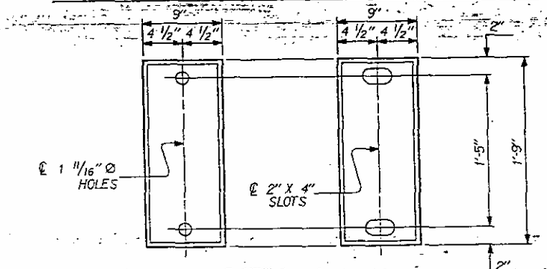

PLAN VIEW OF ELASTOMERIC BEARING

TYPE III

(MODIFIED)

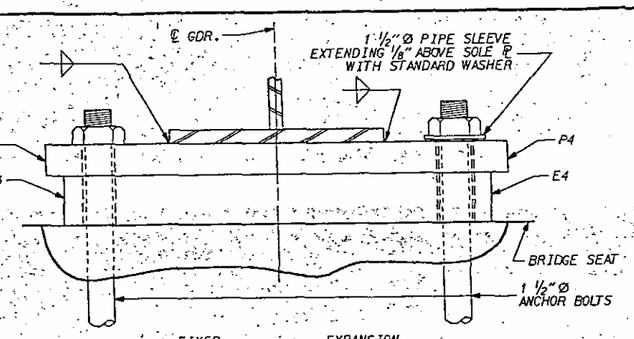

END VIEW

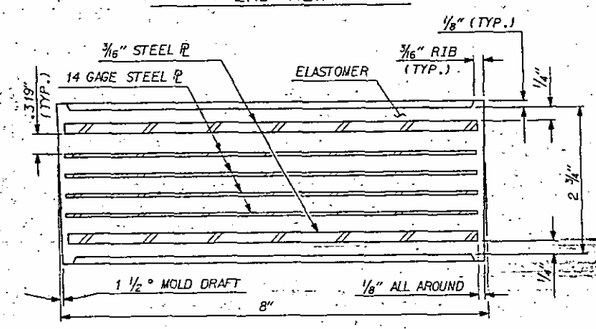

TYPICAL SECTION OF ELASTOMERIC BEARINGS

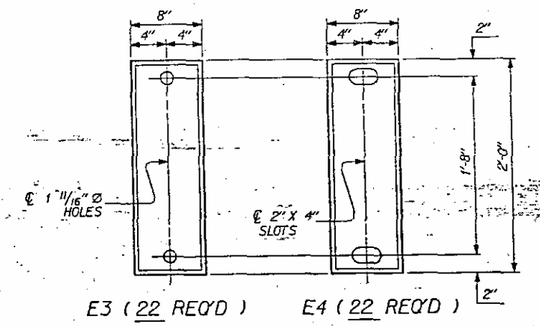

PLAN VIEW OF ELASTOMERIC BEARING

TYPE IV

NOTES

FOR ELASTOMERIC BEARINGS, SEE SPECIAL PROVISIONS.

AT ALL FIXED POINTS OF SUPPORT, NUTS FOR ANCHOR BOLTS ARE TO BE TIGHTENED FINGER TIGHT AND THEN BACKED OFF 1/2 TURN. THE THREAD OF THE NUT AND BOLT SHALL THEN BE BURRED WITH A SHARP POINTED TOOL.

THE 1 1/4" Ø & 1 1/2" Ø PIPE SLEEVES SHALL BE CUT FROM SCHEDULE 40 P.V.C. PLASTIC PIPE. THE P.V.C. PLASTIC PIPE SHALL MEET THE REQUIREMENTS OF A.S.T.M. D1785. THE PAYMENT FOR THE PIPE SLEEVES SHALL BE INCLUDED IN THE GENERAL PAY ITEMS.

FOR UNPAINTED A.S.T.M. A-588 STRUCTURAL STEEL, SOLE PLATE SHALL BE A.S.T.M. A-588 AND SHALL NOT BE GALVANIZED. ANCHOR BOLTS AND NUTS SHALL BE IN ACCORDANCE WITH THE STANDARD SPECIFICATIONS.

WHITE LEAD AND TALLOW SHALL NOT BE APPLIED TO THE SURFACE OF THE SOLE PLATE IN CONTACT WITH THE ELASTOMERIC BEARING.

FOR P1 THRU P6, SEE "SOLE PLATE DETAILS" SHEET.

LOAD RATINGS

	MAX. D.L.+ L.L.	MAX. D.L.	MIN. D.L.	MAX. DEFL.
E1,E2 TYPE II	82.16 K	68.47 K	28.75 K	7.0 %
E3,E4 TYPE IV	142.17 K	88.86 K	37.51 K	7.0 %
E5,E6 TYPE III (MODIFIED)	139.77 K	87.36 K	36.91 K	7.0 %

PROJECT NO. 8.1236903

JOHNSTON COUNTY

STATION: 536+91.47 -L-

STATE OF NORTH CAROLINA
DEPARTMENT OF TRANSPORTATION
RALEIGH

SUPERSTRUCTURE

ELASTOMERIC BEARING DETAILS

REVISIONS						SHEET NO.
NO.	BY:	DATE:	NO.	BY:	DATE:	232
1			3			TOTAL SHEETS
2			4			

DRAWN BY : MIKE BRITT DATE : 11-17-87
CHECKED BY : Don Hodge DATE : 5-11-88

CADD 1492 10 BRG.DGN

STR. 910

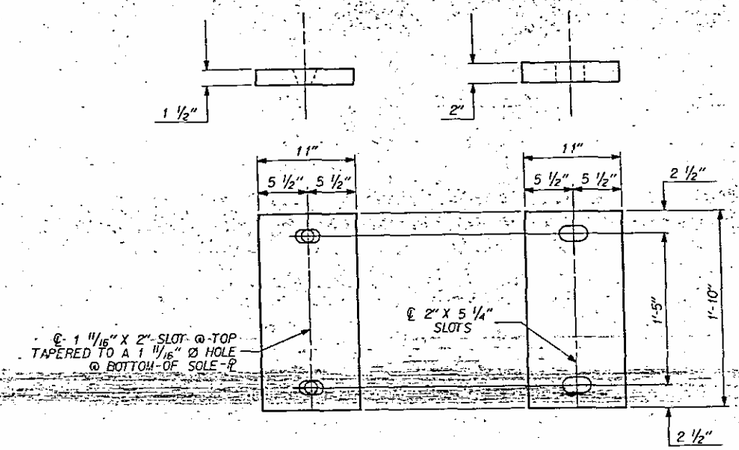

P5 (1 REQ'D) P6 (1 REQ'D)

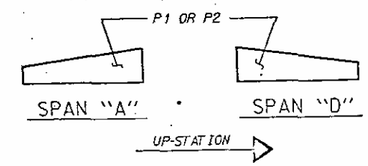

SOLE ℄ PLACEMENT DETAIL

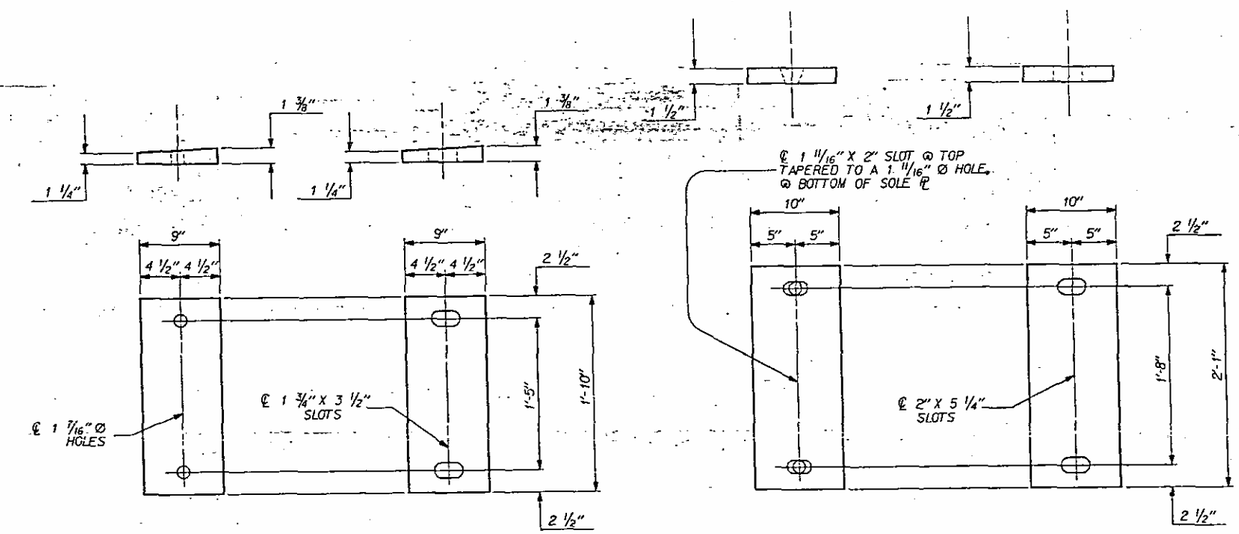

P1 (23 REQ'D) P2 (23 REQ'D) P3 (22 REQ'D) P4 (22 REQ'D)

SOLE PLATE DETAILS ("P")

PROJECT NO. 8.1236903
JOHNSTON COUNTY
STATION: 536+91.47 -L-

STATE OF NORTH CAROLINA
DEPARTMENT OF TRANSPORTATION
RALEIGH

SUPERSTRUCTURE

SOLE PLATE DETAILS

REVISIONS								SHEET NO.
NO.	BY:	DATE:	NO.	BY:	DATE:			~~S-78~~ 233
1			3					TOTAL SHEETS
2			4					~~197~~

DRAWN BY: MIKE BRITT DATE: 1-27-88
CHECKED BY: Don Hodge DATE: 5-10-89

CADD 1492 10 BRG.DGN

STR.#10

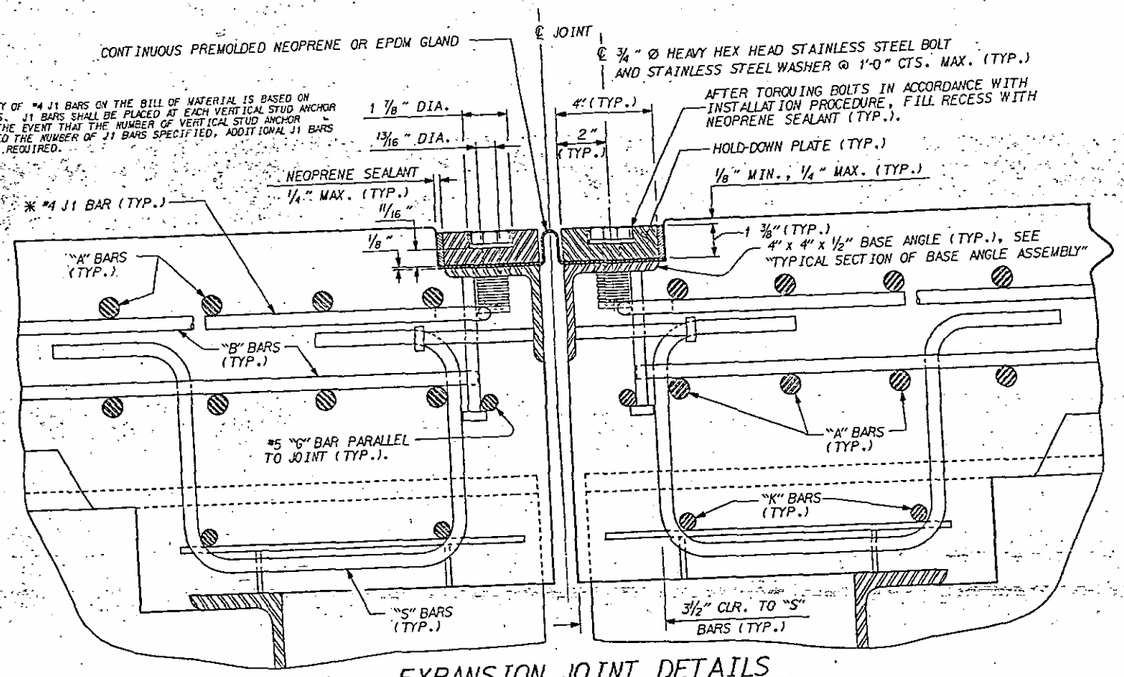

* THE QUANTITY OF #4 J1 BARS ON THE BILL OF MATERIAL IS BASED ON 1'-0" CENTERS. J1 BARS SHALL BE PLACED AT EACH VERTICAL STUD ANCHOR BOLT. IN THE EVENT THAT THE NUMBER OF VERTICAL STUD ANCHOR BOLTS EXCEED THE NUMBER OF J1 BARS SPECIFIED, ADDITIONAL J1 BARS WILL NOT BE REQUIRED.

EXPANSION JOINT DETAILS

SECTION NORMAL TO JOINT -- STEEL SUPERSTRUCTURE

INSTALLATION PROCEDURE

1. A TEMPLATE OR OTHER SUITABLE DEVICE SHALL BE USED TO FORM THE TOP OF THE EXPANSION JOINT SEAL BLOCKOUT TO THE PROPER DEPTH AND WIDTH. THE TEMPLATE SHALL BE 1⅛" TO 1¼" THICK BY 4⅛" TO 4¼" WIDE IN ORDER FOR THE JOINT TO BE SET TO THE PROPER DEPTH. THE TEMPLATE SHALL BE ATTACHED TO THE BASE ANGLE ASSEMBLY WITH THE ¾" Ø HEX HEAD BOLTS PROVIDED FOR THE HOLD-DOWN PLATES.
2. THE CONTRACTOR SHALL SUBMIT FOR APPROVAL THE PROPOSED METHOD OF HOLDING THE BASE ANGLE ASSEMBLY IN PLACE WHILE THE CONCRETE IS CAST AROUND IT. THE TEMPLATE SHALL BE FLUSH WITH THE TOP OF DECK.
3. AFTER THE CONCRETE HAS BEEN CAST ON BOTH SIDES OF THE JOINT, REMOVE THE TEMPLATE. THOROUGHLY CLEAN THE BOLT HOLES AND THE ANGLE PLATE. REMOVE ANY EXCESS CONCRETE THAT COMES OUT OF THE WEEP HOLES. ANY DAMAGED STEEL SHALL BE COATED WITH TWO (2) COATS OF ZINC-RICH PAINT IN ACCORDANCE WITH THE SPECIFICATIONS.
4. LAY THE GLAND ON THE BASE ANGLE AND FIELD MARK THE GLAND FOR THE BOLT HOLES. HOLES IN THE GLAND SHALL BE PUNCHED ⅞" IN DIAMETER WITH A HAND PUNCH.
5. IN ORDER TO CHECK FOR PROPER ALIGNMENT, PLACE THE GLAND AND HOLD-DOWN PLATES ON THE BASE ANGLE. DO NOT APPLY NEOPRENE SEALANT. BOLT THE HOLD-DOWN PLATES TO THE BASE ANGLE BUT DO NOT TIGHTEN. THE ENGINEER SHALL INSPECT THE JOINT SEAL DEVICE FOR PROPER ALIGNMENT.
6. AFTER INSPECTION, REMOVE THE HOLD-DOWN PLATES AND GLAND. APPLY NEOPRENE SEALANT TO THE BASE ANGLE IN ACCORDANCE WITH THE "INSTALLATION SKETCH". PLACE GLAND AND HOLD-DOWN PLATES ON THE BASE ANGLE. BOLT THE HOLD-DOWN PLATES TO THE BASE ANGLE ASSEMBLY AND TORQUE THE BOLTS TO 88 FT.-LBS WITH A TORQUE WRENCH. THE TORQUE WRENCH SHALL BE CALIBRATED IN ACCORDANCE WITH SECTION 440-10 (D) OF THE STANDARD SPECIFICATIONS. CHECK THE TORQUE AFTER THREE (3) HOURS AND, IF NECESSARY, RETIGHTEN TO 88 FT.-LBS. A FINAL CHECK SHALL BE MADE AT SEVEN (7) DAYS. TORQUE SHALL NOT BE LESS THAN 80 FT.-LBS. AFTER SEVEN (7) DAYS.
7. AFTER PROPER TORQUING, CLEAN THE BOLT HOLE RECESSES AND THE RECESS BETWEEN THE JOINT SEAL DEVICE AND CONCRETE. COMPLETELY FILL THESE RECESSES WITH NEOPRENE SEALANT.

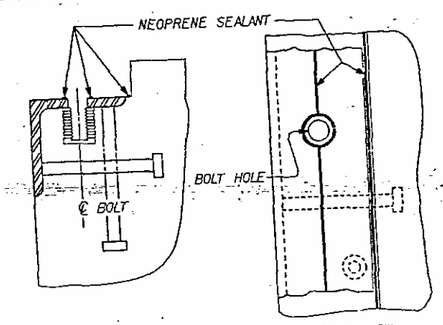

INSTALLATION SKETCH

GENERAL NOTES

1. ARMORED JOINTS SHALL BE PROVIDED AT ALL LOCATIONS SHOWN ON THE PLANS.
2. ALL PLATES AND ANGLES SHALL CONFORM TO ASTM A36 STEEL OR APPROVED EQUAL. ALL HOLD-DOWN BOLTS SHALL CONFORM TO TYPE 304 STAINLESS STEEL. ALL STUD ANCHORS SHALL CONFORM TO ASTM A108, GRADES 1010 THRU 1020 OR APPROVED EQUAL. ALL CONCRETE INSERTS SHALL BE CLOSED-END AND SHALL CONFORM TO ASTM A108, GRADE 12L14. TENSILE CAPACITY SHALL BE 3000 LBS. MIN.
3. A PREMOLDED CORRUGATED OR ~~NON-CORRUGATED~~ GLAND SHALL BE USED FOR JOINTS SKEWED BETWEEN 50° THRU 130°. FOR JOINTS SKEWED LESS THAN 50° OR OR MORE THAN 130°, ONLY A CORRUGATED GLAND SHALL BE USED.
4. GLAND SHALL BE CONTINUOUS THROUGHOUT THE JOINT. GLAND SHALL BE EITHER ELASTIC POLYCHLOROPRENE (NEOPRENE) OR ETHYL PROPYLENE DIENE MONOMER (EPDM) AND SHALL HAVE THE FOLLOWING MINIMUM PROPERTIES:

	ASTM TEST	REQUIREMENTS
HARDNESS, DUROMETER-SHORE A	D2240	60±5, NEOPRENE (UPWARD CORRUGATED SHAPE-FABRIC REINFORCED)
		75±5, EPDM AND NEOPRENE (UPWARD NON-CORRUGATED SHAPE)
		80±5, EPDM (UPWARD CORRUGATED SHAPE-FABRIC REINFORCED)
TENSILE STRENGTH	D412	2000 PSI, MIN.
ELONGATION AT BREAK	D412	250% MIN.
THICKNESS OF UPTURNED PORTION OF GLAND	N/A	¼" (NON-CORRUGATED SHAPE)
		⅛" (CORRUGATED SHAPE)

5. CLOSED END FERRULES AND STUD ANCHORS SHALL BE SHOP WELDED AND ALL HOLES SHALL BE SHOP DRILLED AS SHOWN ON PLANS. STUD ANCHORS SHALL BE ELECTRIC ARC END WELDED WITH COMPLETE FUSION.
6. SURFACES COMING IN CONTACT WITH NEOPRENE SHALL BE GROUND SMOOTH PRIOR TO PAINTING.
7. UPON COMPLETION OF SHOP FABRICATION, ALL STEEL PARTS, EXCLUDING STAINLESS STEEL BOLTS, SHALL BE COMMERCIALLY BLAST CLEANED AND SHALL BE PAINTED WITH TWO (2) COATS OF ZINC-RICH PAINT IN ACCORDANCE WITH THE SPECIFICATIONS. EACH COAT SHALL HAVE A MINIMUM THICKNESS OF 3 MILS. PAINTED SURFACES THAT ARE ABRADED OR DAMAGED AT ANY TIME AFTER THE APPLICATION OF THE ZINC COATING SHALL BE REPAIRED AS SPECIFIED FOR DAMAGED GALVANIZING.
8. BASE ANGLE ASSEMBLY SHALL BE CONTINUOUS FOR THE LENGTH OF THE JOINT. BASE ANGLE ASSEMBLIES SHALL BE SHIPPED IN 25' MINIMUM LENGTHS. FOR JOINTS REQUIRING BASE ANGLE ASSEMBLIES LONGER THAN 25', FIELD WELDING OF THE BASE ANGLE WILL BE PERMITTED. AT CROWN BREAKS, THE ENDS OF THE BASE ANGLE ASSEMBLY SHALL BE CUT PARALLEL TO THE BRIDGE CENTERLINE FOR SKEWS LESS THAN 80° AND GREATER THAN 100°. WHEN FIELD WELDING IS PROPOSED, THE CONTRACTOR SHALL SUBMIT PROPOSED WELDING DETAILS FOR APPROVAL. FINISHED WELD SHALL BE GROUND SMOOTH AND COATED WITH TWO (2) COATS OF ZINC-RICH PAINT IN ACCORDANCE WITH THE SPECIFICATIONS.
9. THE FINISHED EXPANSION SEAL DEVICE SHALL BE A MINIMUM OF ⅛" AND A MAXIMUM OF ¼" BELOW THE TOP OF SLAB.
10. FIELD SPLICES OF HOLD-DOWN PLATES SHALL BE KEPT TO A MINIMUM. CONTRACTOR SHALL FURNISH DETAILED PLANS SHOWING PROPOSED SPLICE LOCATIONS FOR APPROVAL. HOLD-DOWN PLATES SHALL NOT EXCEED 20' LENGTHS UNLESS APPROVED BY THE ENGINEER. SEE SPECIAL PROVISIONS FOR EXPANSION JOINT SEALS.
11. NO ALTERNATE JOINT DETAILS SHALL BE PERMITTED IN LIEU OF THOSE SHOWN ON THESE PLANS.
12. SEE SPECIAL PROVISIONS FOR EXPANSION JOINT SEALS.

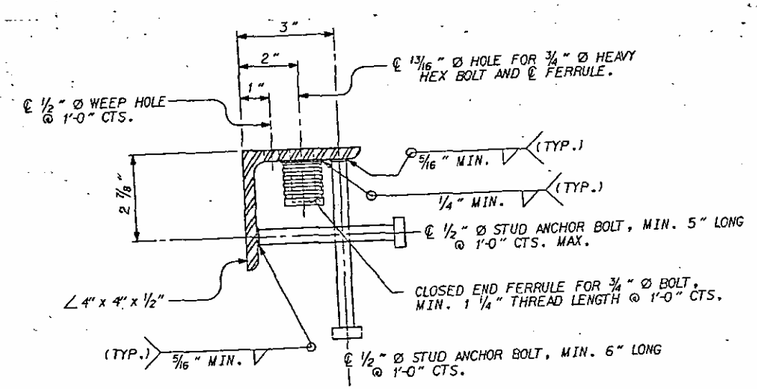

TYPICAL SECTION OF BASE ANGLE ASSEMBLY

MOVEMENT AND SETTING AT JOINT					
BENT NO.	SKEW ANGLE	TOTAL MOVEMENT (ALONG ℄ RDWY)	PERPENDICULAR JOINT OPENING AT 30° F	PERPENDICULAR JOINT OPENING AT 60° F	PERPENDICULAR JOINT OPENING AT 90° F
1	126°-53'-23"	1¼"	1⅞"	1 3/16"	1¼"
2	126°-53'-23"	1"	1 11/16"	1 7/16"	1 3/16"
3	126°-53'-23"	⅞"	1 5/16"	1 3/16"	1 1/16"

PROJECT NO. 8.1236903
JOHNSTON COUNTY
STATION: 536+91.47 -L-

SHEET 1 OF 3

STATE OF NORTH CAROLINA
DEPARTMENT OF TRANSPORTATION
RALEIGH

STANDARD

EXPANSION JOINT SEAL DETAILS

OCTOBER 1987

REVISIONS							
NO.	BY:	DATE:	NO.	BY:	DATE:	SHEET NO.	
1			3			S-79	234
2			6			TOTAL SHEETS	
						197	

ASSEMBLED BY: MIKE BRITT	DATE: 4-7-88	SPECIAL	
CHECKED BY: Don Hodge	DATE: 5-10-88		
DRAWN BY: ROSS E. KUBENY	DATE: 9-18-87	STANDARD	
CHECKED BY: CINDY R. KING	DATE: 10-2-87		

CADD 1492-10 EJS.DGN

ADDED 2-29-88

EJSI STR.#10

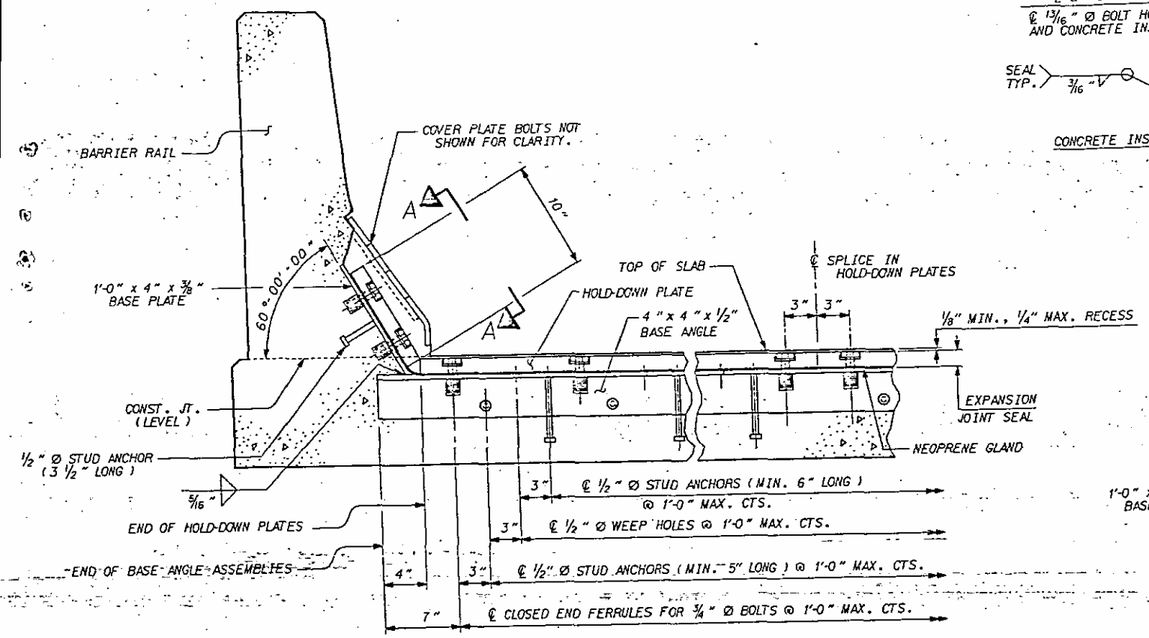

SECTION THRU RAIL NORMAL TO JOINT

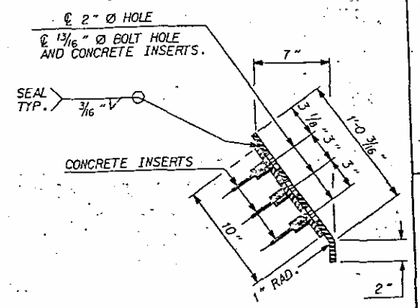

END VIEW

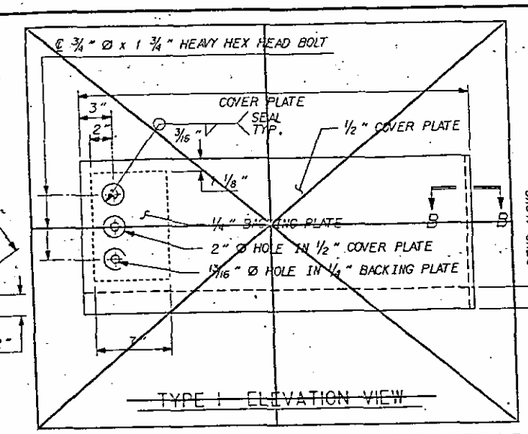

TYPE I - ELEVATION VIEW

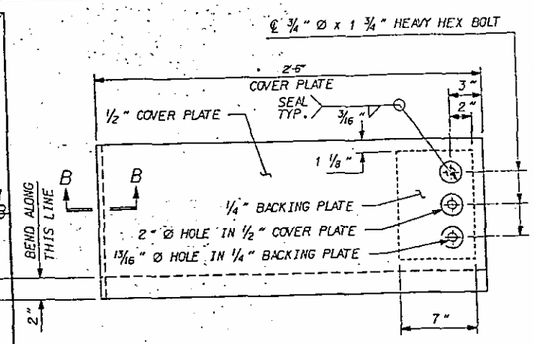

TYPE II - ELEVATION VIEW

COVER PLATE DETAILS

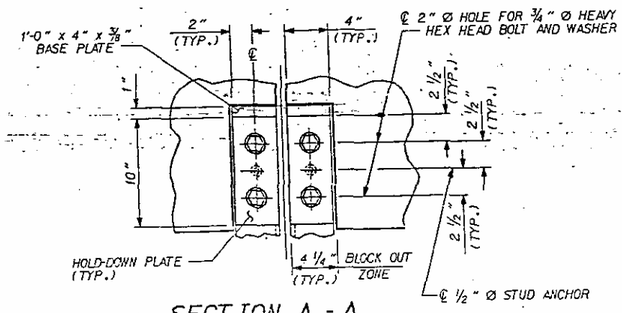

SECTION A - A

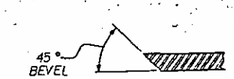

SECTION B - B

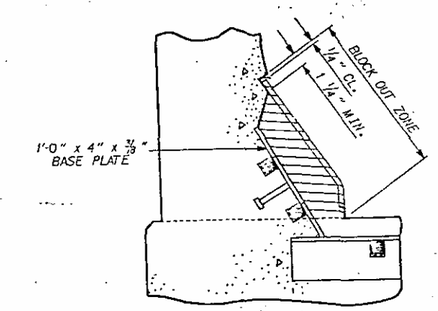

BLOCK OUT DETAIL

SEE "SECTION A - A" FOR OTHER DETAILS.

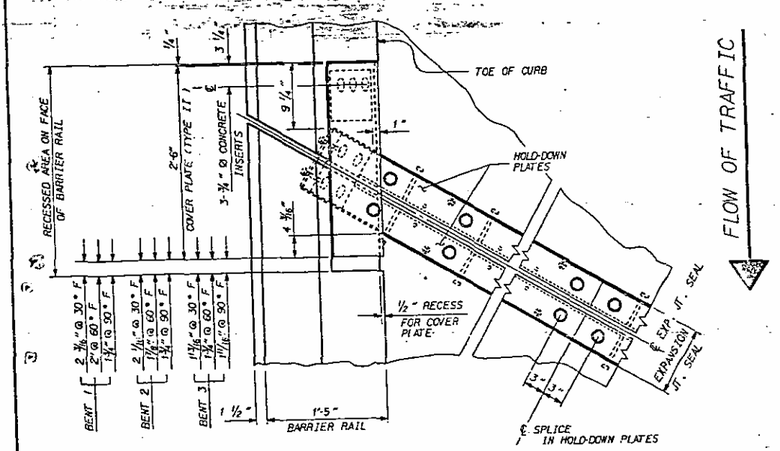

PLAN OF EXPANSION JOINT SEAL - LEFT SIDE

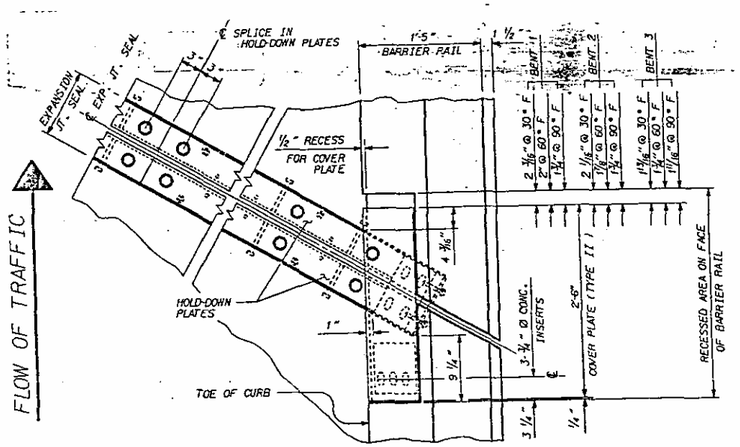

PLAN OF EXPANSION JOINT SEAL - RIGHT SIDE

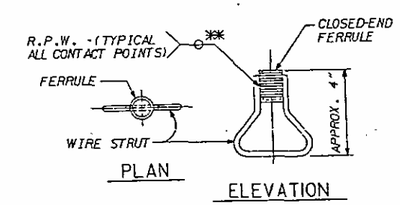

CONCRETE INSERT

** EACH WELDED ATTACHMENT OF WIRE TO FERRULE SHALL DEVELOP THE TENSILE STRENGTH OF THE WIRE.

PROJECT NO. 8.1236903
JOHNSTON COUNTY
STATION: 536+91.47 -L-

SHEET 2 OF 3

STATE OF NORTH CAROLINA
DEPARTMENT OF TRANSPORTATION
RALEIGH

STANDARD

EXPANSION JOINT SEAL DETAILS

OCTOBER 1987

REVISIONS						SHEET NO.
NO.	BY:	DATE:	NO.	BY:	DATE:	235
1			3			TOTAL SHEETS
2			4			497

ASSEMBLED BY: MIKE BRITT DATE: 4-7-88
CHECKED BY: Don Hodge DATE: 5-10-88
SPECIAL

DRAWN BY: ROSS E. KUBENY DATE: 9-18-87
CHECKED BY: CINDY R. KING DATE: 10-2-87
STANDARD

CADD 1492 10 EJS.DGN

ADDED 2-29-88

EJS2 STR.-10

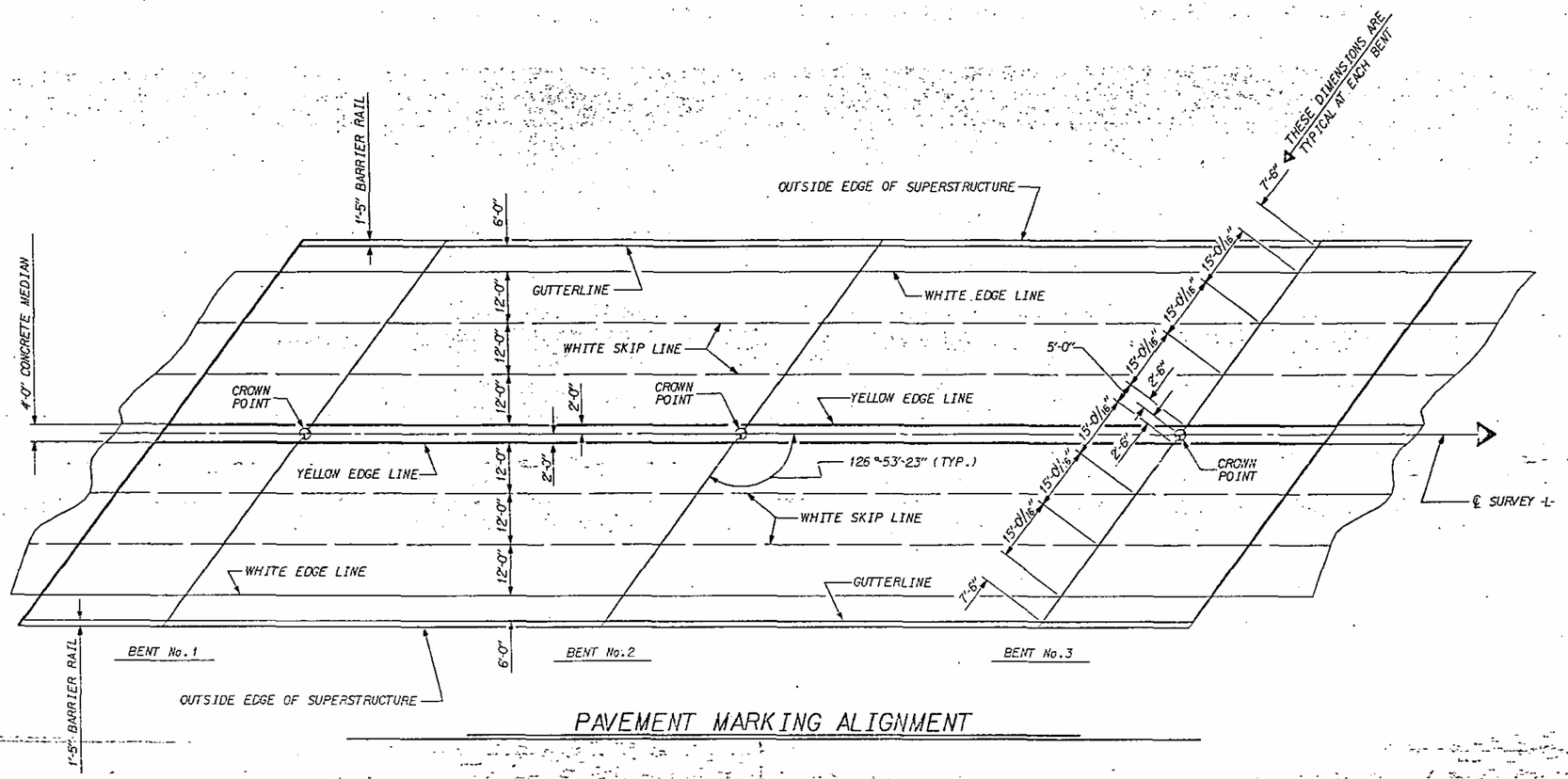

PAVEMENT MARKING ALIGNMENT

PROJECT NO. 8.1236903
JOHNSTON COUNTY
STATION: 536+91.47 -L-

SHEET 3 OF 3

STATE OF NORTH CAROLINA
DEPARTMENT OF TRANSPORTATION
RALEIGH

EXPANSION JOINT SEAL DETAILS

REVISIONS						SHEET NO.
NO.	BY:	DATE:	NO.	BY:	DATE:	5-91
1			3			TOTAL SHEETS
2			4			107

DRAWN BY : MIKE BRITT DATE : 4-11-88
CHECKED BY : Dan Hodges DATE : 5-2-88

CADD 1492 10 EJS.DGN

236

STR.#10

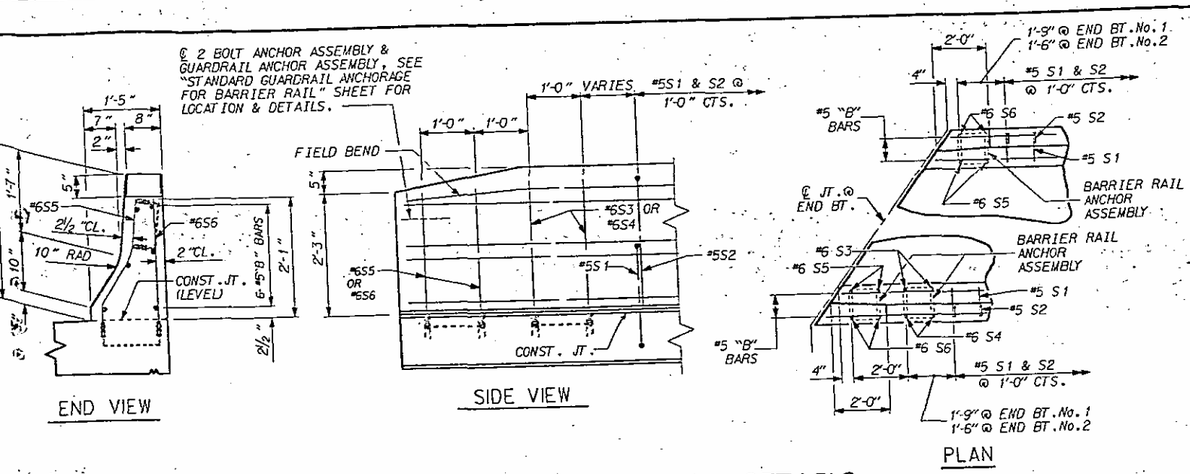

BARRIER RAIL—END OF RAIL DETAILS

NOTES

FOR CONCRETE BARRIER RAIL, SEE SPECIAL PROVISIONS.

THE BARRIER RAIL IN EACH SPAN SHALL NOT BE CAST UNTIL ALL SLAB CONCRETE IN THAT SPAN HAS BEEN CAST AND HAS REACHED A MINIMUM COMPRESSIVE STRENGTH OF 3,000 PSI.

WHEN COMPRESSION JOINT SEAL IS REQUIRED, THE JOINT IN THE DECK SHALL BE SAWED PRIOR TO THE CASTING OF BARRIER RAIL.

THE 1" Δ GROOVE AT THE CONSTRUCTION JOINT MAY BE OMITTED.

A 1½" EXTENSION OF THE CONCRETE SLAB BEYOND THE OUTSIDE FACE OF THE BARRIER RAIL WILL BE PERMITTED IF THE CONTRACTOR ELECTS TO SLIP FORM THE BARRIER RAILS. NO ADDITIONAL REINFORCING STEEL IS REQUIRED AND THE PAYMENT FOR THE REINFORCED CONCRETE DECK SLAB WILL BE FOR THE QUANTITY SHOWN ON THE PLANS.

FERRULES SHALL BE PLUGGED DURING CASTING OF SLAB AS RECOMMENDED BY THE MANUFACTURER.

THE BARRIER RAIL ANCHOR ASSEMBLY FERRULES SHALL HAVE THREADS COMPATIBLE TO THE THREADED REINFORCING BARS. THE FERRULES SHALL HAVE A MINIMUM LENGTH EQUAL TO THE LENGTH OF THE THREADS ON THE REINFORCING BARS.

THE THREADED REINFORCING BARS ARE TO BE TIGHTENED BY HAND.

~~AT THE CONTRACTORS OPTION, FERRULES WITH OPEN OR CLOSED ENDS MAY BE USED.~~

THE WIRE GAGE AND FERRULES SHALL BE OF SUFFICIENT STRENGTH TO ENSURE LOAD ANCHORING CAPACITY AS SPECIFIED IN THE AASHTO SPECIFICATIONS. A MANUFACTURER'S CERTIFICATION OF LOAD ANCHORING CAPACITY SHALL BE FURNISHED WITH EACH SHIPMENT OF BARRIER RAIL ANCHOR ASSEMBLIES.

THE THREADED REINFORCING BARS SHALL BE GRADE 60. THE BAR SHALL BE MANUFACTURED WITH A MALE THREADED END WITH A MINIMUM TENSILE STRESS AREA OF 0.334 SQUARE INCHES. THE BARRIER RAIL ANCHOR ASSEMBLY AND THREADED REINFORCING BARS SHALL BE SUPPLIED AS A UNIT.

THE BARRIER RAIL ANCHOR ASSEMBLIES WITH THREADED REINFORCING BARS SHALL BE ASSEMBLED IN THE SHOP. REINFORCING BAR THREADS MAY BE RECUT AS NECESSARY.

THE COST OF THE BARRIER RAIL ANCHOR ASSEMBLIES WITH THREADED REINFORCING BARS SHALL BE INCLUDED IN THE UNIT CONTRACT PRICE BID FOR CONCRETE BARRIER RAIL.

FOR EPOXY COATED REINFORCING STEEL, SEE SPECIAL PROVISIONS.

BAR TYPES

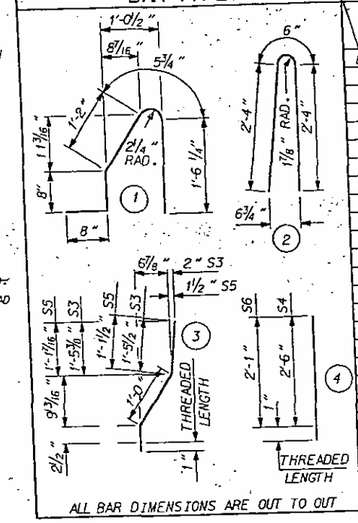

ALL BAR DIMENSIONS ARE OUT TO OUT

BILL OF MATERIAL

FOR CONCRETE BARRIER RAIL ONLY
STAGE 1 OF SPANS "A" & "B"
AND SPANS "C" & "D"

BAR	NO.	SIZE	TYPE	LENGTH	WEIGHT
S1	396	#5	1	4'-6"	1,859
S2	396	#5	2	5'-2"	2,134
S3	4	#6	3	2'-9"	17
S4	4	#6	4	2'-7"	16
S5	6	#6	3	2'-5"	22
S6	6	#6	4	2'-2"	20
B1	24	#5	STR.	9'-3"	232
B2	72	#5	STR.	14'-2"	1,064
B3	36	#5	STR.	25'-2"	945
B4	48	#5	STR.	9'-8"	484

VOID

EPOXY COATED REINFORCING STEEL	6,793 LBS.
CLASS A-A CONCRETE	37.8 CU. YDS.
CONCRETE BARRIER RAIL	411.59 LIN. FT.

FOR CONCRETE BARRIER RAIL ONLY
STAGE 2 OF SPANS "A" & "B"

BAR	NO.	SIZE	TYPE	LENGTH	WEIGHT
S1	132	#5	1	4'-5"	620
S2	132	#5	2	5'-2"	711
S5	2	#6	3	2'-5"	7
S6	2	#6	4	2'-2"	7
B1	24	#5	STR.	9'-3"	232
B2	24	#5	STR.	14'-2"	355
B3	12	#5	STR.	25'-2"	315

EPOXY COATED REINFORCING STEEL	2,247 LBS.
CLASS A-A CONCRETE	12.5 CU. YDS.
CONCRETE BARRIER RAIL	136.20 LIN. FT.

ALL REINFORCING STEEL IN BARRIER RAIL IS EPOXY COATED.

PROJECT NO. 8.1236903
JOHNSTON COUNTY
STATION: 536+91.47 -L-

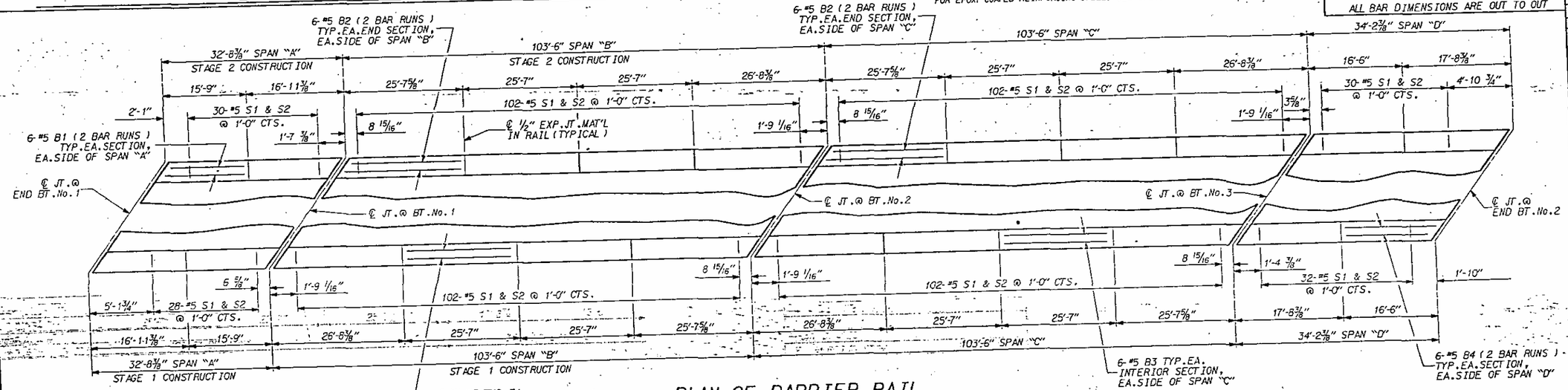

PLAN OF BARRIER RAIL

FOR ANCHOR ASSEMBLY LOCATIONS, SEE "END OF RAIL DETAILS"

NOTE
#5 S1 MAY BE SHIFTED SLIGHTLY IN ORDER TO MAINTAIN 2" MIN. CLR. TO EXP. JT. MAT'L IN BARRIER RAIL

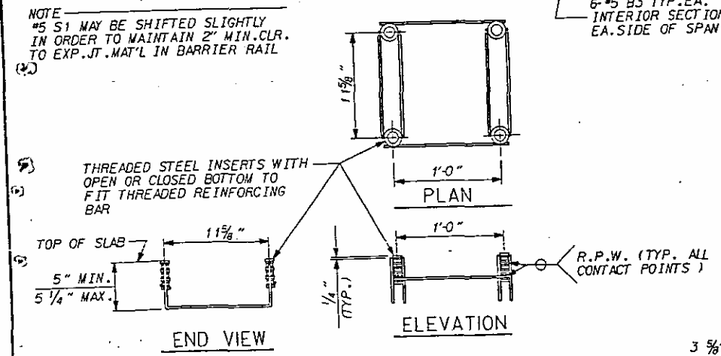

BARRIER RAIL ANCHOR ASSEMBLY

6 ANCHOR ASSEMBLIES REQUIRED

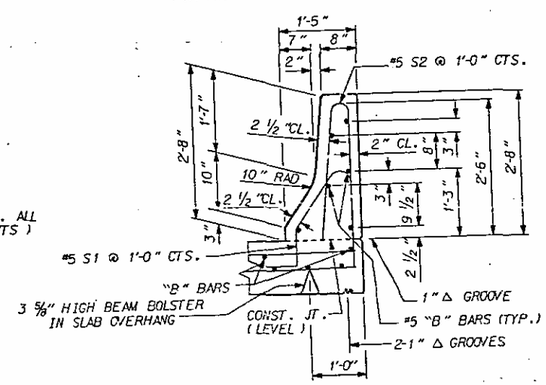

SECTION THRU RAIL

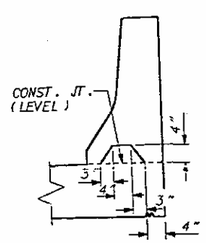

SECTION S-S

AT DAM IN OPEN JOINT (THIS IS TO BE USED ONLY WHEN SLIP FORM IS USED)

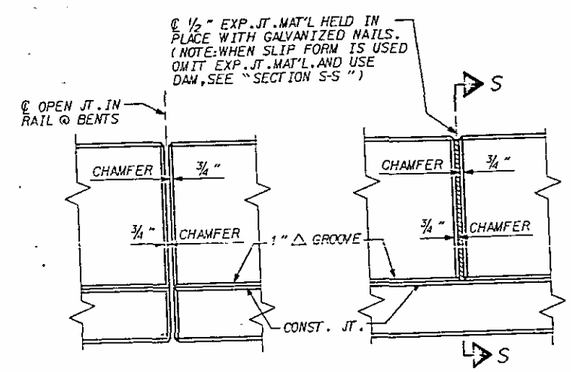

ELEVATION AT EXPANSION JOINTS

BARRIER RAIL DETAILS

STATE OF NORTH CAROLINA
DEPARTMENT OF TRANSPORTATION
RALEIGH

SUPERSTRUCTURE

CONCRETE BARRIER RAIL

REVISIONS							
NO.	BY:	DATE:	NO.	BY:	DATE:	SHEET NO.	
1			3			~~S-32~~	237
2			4			TOTAL SHEETS ~~107~~	

DRAWN BY: MIKE BRITT DATE: 11-9-87
CHECKED BY: Dan Hedge DATE: 5-10-88

CADD 1492 10 BRL.DGN

STR.#10

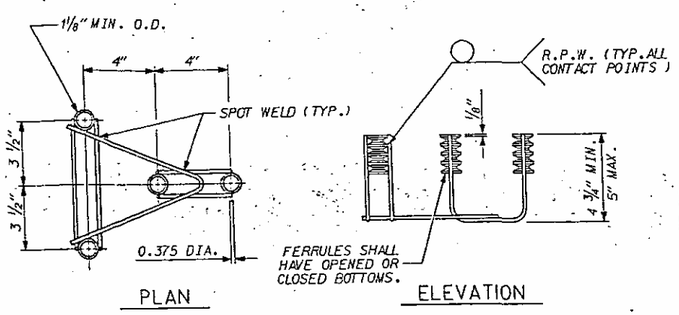

GUARDRAIL ANCHOR ASSEMBLY

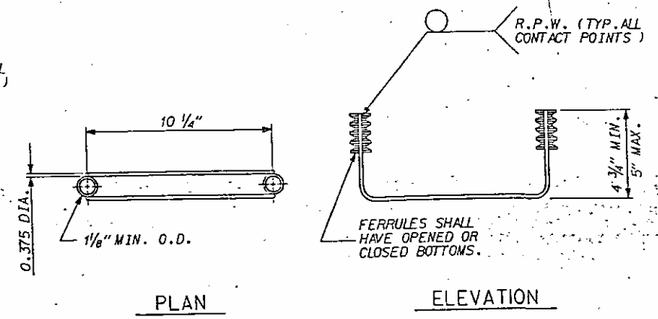

2 - BOLT ANCHOR ASSEMBLY

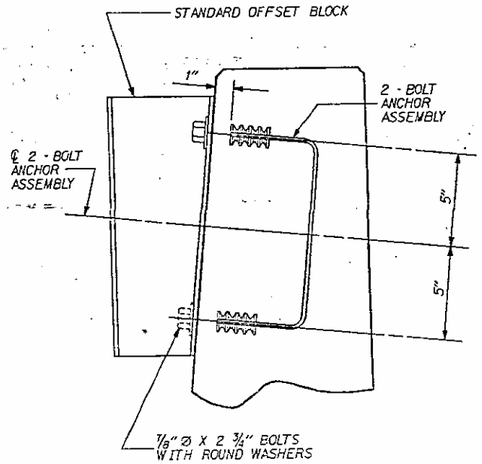

SECTION D-D

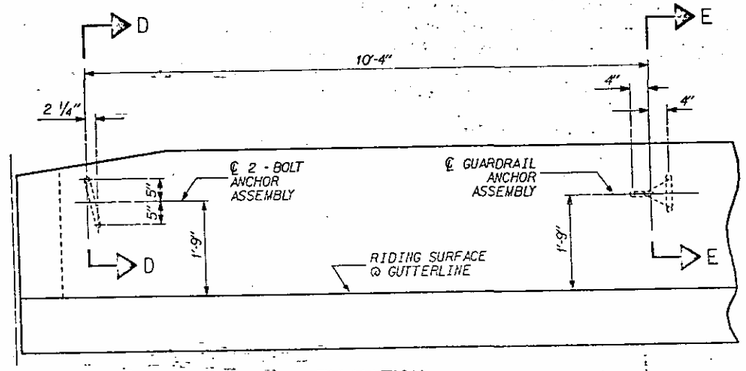

ELEVATION

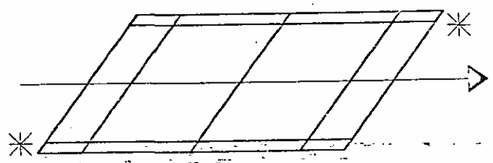

SKETCH SHOWING POINTS OF ATTACHMENTS

✳ - GUARDRAIL ANCHORS REQUIRED

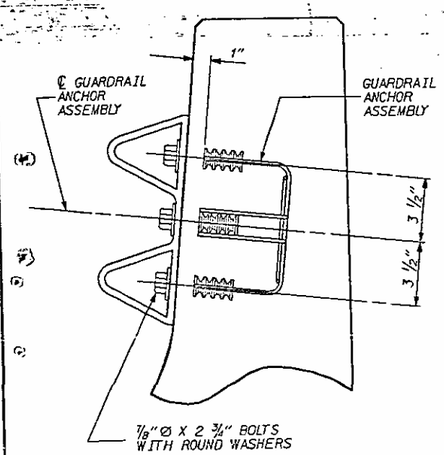

SECTION E-E

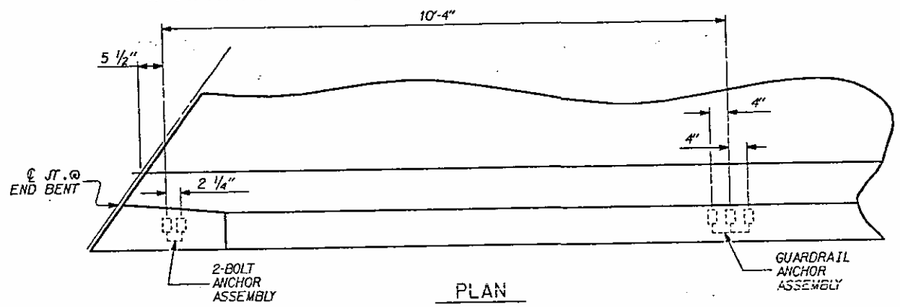

LOCATION OF ANCHORS FOR GUARDRAIL AND OFFSET BLOCK

NOTES

THE GUADRRAIL ANCHOR ASSEMBLY AND THE 2-BOLT ANCHOR ASSEMBLY SHALL CONSIST OF THE FOLLOWING COMPONENTS :

A. FERRULES SHALL BE MADE FROM STEEL MEETING THE REQUIREMENTS OF ASTM A108, GRADE 12L14 AND SHALL HAVE A MINIMUM LENGTH OF THREADS OF 1½".

B. 4 - ⅞"Ø X 2 ¾" BOLTS WITH WASHERS FOR GUARDRAIL ANCHOR ASSEMBLY AND 2 - ⅞"Ø X 2 ¾" BOLTS WITH WASHERS FOR 2-BOLT ANCHOR ASSEMBLY SHALL CONFORM TO THE REQUIREMENTS OF ASTM A307. BOLTS AND WASHERS SHALL BE GALVANIZED. ~~(AT THE CONTRACTORS OPTION, STAINLESS STEEL BOLTS WITH WASHERS MAY BE USED AS AN ALTERNATE FOR THE ⅞"Ø X 2 ¾" GALVANIZED BOLTS AND WASHERS.~~ THEY SHALL CONFORM TO OR EXCEED THE MECHANICAL REQUIREMENTS OF ASTM A307. THE USE OF THIS ALTERNATE SHALL BE APPROVED BY THE ENGINEER.)

C. WIRE STRUTS SHOWN IN THE ANCHOR ASSEMBLY ARE THE MINIMUM ALLOWABLE SIZE AND SHALL HAVE A MINIMUM TENSILE STRENGTH OF 100,000 PSI.

THE GUARDRAIL ANCHOR ASSEMBLIES AND THE 2-BOLT ANCHOR ASSEMBLIES WITH BOLTS SHALL BE ASSEMBLED IN THE SHOP. BOLT THREADS MAY BE RECUT AS NECESSARY.

THE COST OF THE GUARDRAIL ANCHOR ASSEMBLIES AND THE 2-BOLT ANCHOR ASSEMBLIES WITH BOLTS AND WASHERS COMPLETE IN PLACE, SHALL BE INCLUDED IN THE UNIT CONTRACT PRICE BID FOR CONCRETE BARRIER RAIL.

THE GUARDRAIL ANCHOR ASSEMBLY AND THE 2-BOLT ANCHOR ASSEMBLY ARE REQUIRED AT ALL POINTS WHERE APPROACH GUARDRAIL IS TO BE ATTACHED TO THE END OF BARRIER RAIL. FOR POINTS OF ATTACHMENT, SEE SKETCH.

PROJECT NO. 8.1236903
JOHNSTON COUNTY
STATION: 536+91.47 -L-

STATE OF NORTH CAROLINA
DEPARTMENT OF TRANSPORTATION
RALEIGH

GUARDRAIL ANCHORAGE FOR BARRIER RAIL

REVISIONS								SHEET NO.
NO.	BY:	DATE:	NO.	BY:	DATE:			~~S-33~~ 238
1			3					TOTAL SHEETS
2			4					~~107~~

DRAWN BY : MIKE BRITT DATE : 2-19-88
CHECKED BY : Don Hodge DATE : 2-10-88

CADD 1492 10 GRA.DGN

STR.#10

REINFORCING BAR SCHEDULE

STAGE 1 CONSTRUCTION

SPAN "A"

BAR	NO.	SIZE	TYPE	LENGTH	WEIGHT
* A1	50	5	STR.	42'- 8"	2.225
A2	50	5	STR.	42'- 8"	2.225
* A101	8	5	STR.	40'-11"	341
* A102	8	5	STR.	38'- 9"	323
* A103	8	5	STR.	36'- 6"	305
* A104	8	5	STR.	34'- 3"	286
* A105	8	5	STR.	32'- 1"	268
* A106	8	5	STR.	29'-10"	249
* A107	8	5	STR.	27'- 7"	230
* A108	8	5	STR.	25'- 5"	212
* A109	8	5	STR.	23'- 2"	193
* A110	8	5	STR.	20'-11"	175
* A111	8	5	STR.	18'- 9"	156
* A112	8	5	STR.	16'- 6"	138
* A113	8	5	STR.	14'- 3"	119
* A114	8	5	STR.	12'- 1"	101
* A115	8	5	STR.	9'-10"	82
* A116	8	5	STR.	7'- 8"	64
* A117	8	5	STR.	5'- 5"	45
* A118	8	5	STR.	3'- 2"	26
A201	8	5	STR.	40'-11"	341
A202	8	5	STR.	38'- 9"	323
A203	8	5	STR.	36'- 6"	305
A204	8	5	STR.	34'- 3"	286
A205	8	5	STR.	32'- 1"	268
A206	8	5	STR.	29'-10"	249
A207	8	5	STR.	27'- 7"	230
A208	8	5	STR.	25'- 5"	212
A209	8	5	STR.	23'- 2"	193
A210	8	5	STR.	20'-11"	175
A211	8	5	STR.	18'- 9"	156
A212	8	5	STR.	16'- 6"	138
A213	8	5	STR.	14'- 3"	119
A214	8	5	STR.	12'- 1"	101
A215	8	5	STR.	9'-10"	82
A216	8	5	STR.	7'- 8"	64
A217	8	5	STR.	5'- 5"	45
A218	8	5	STR.	3'- 2"	26
* B1	102	4	STR.	16'- 9"	1,141
B2	100	5	STR.	32'- 4"	3,372
* B7	20	4	STR.	2'- 6"	33
* D1	69	5	STR.	4'- 0"	288
* G1	4	5	STR.	46'- 0"	192
* J1	89	4	4	1'- 5"	84
* K1	4	5	1	5'- 1"	21
* K2	28	5	2	7'- 7"	221
* K3	4	5	2	6'-10"	29
* K4	28	5	STR.	10'- 2"	297
* K5	4	5	STR.	7'- 8"	32
* S1	64	4	3	4'- 2"	178
* S2	64	4	3	3'-10"	164

REINFORCING STEEL= 8,910 LBS.

EPOXY COATED REINFORCING STEEL= 8,218 LBS.

* THESE BARS ARE EPOXY COATED.

SPAN "B"

BAR	NO.	SIZE	TYPE	LENGTH	WEIGHT
* A3	153	5	STR.	33'- 3"	5,306
* A4	121	5	STR.	38'-10"	4,901
A5	242	5	STR.	36'- 1"	9,108
A6	32	5	STR.	34'- 7"	1,154
* A301	8	5	STR.	36'- 8"	306
* A302	8	5	STR.	34'- 5"	287
* A303	8	5	STR.	32'- 2"	268
* A304	8	5	STR.	30'- 0"	250
* A305	8	5	STR.	59'- 6"	496
* A306	8	5	STR.	57'- 4"	478
* A307	8	5	STR.	55'- 1"	460
* A308	8	5	STR.	52'-10"	441
* A309	8	5	STR.	50'- 8"	423
* A310	8	5	STR.	48'- 5"	404
* A311	8	5	STR.	46'- 2"	385
* A312	8	5	STR.	44'- 0"	367
* A313	8	5	STR.	41'- 9"	348
* A314	8	5	STR.	39'- 6"	330
* A315	8	5	STR.	37'- 4"	312
* A316	8	5	STR.	35'- 1"	293
* A317	8	5	STR.	32'-10"	274
* A318	8	5	STR.	30'- 8"	256
* A319	8	5	STR.	28'- 5"	237
* A320	8	5	STR.	26'- 2"	218
* A321	8	5	STR.	24'- 0"	200
* A322	8	5	STR.	21'- 9"	181
* A323	8	5	STR.	19'- 7"	163
* A324	8	5	STR.	17'- 4"	145
* A325	8	5	STR.	15'- 1"	126
* A326	8	5	STR.	12'-11"	108
* A327	8	5	STR.	10'- 8"	89
* A328	8	5	STR.	8'- 5"	70
* A329	8	5	STR.	6'- 3"	52
* A330	8	5	STR.	4'- 0"	33
A401	8	5	STR.	35'- 4"	295
A402	8	5	STR.	33'- 1"	276
A403	8	5	STR.	30'-10"	257
A404	8	5	STR.	28'- 8"	239
A405	8	5	STR.	59'- 6"	496
A406	8	5	STR.	57'- 4"	478
A407	8	5	STR.	55'- 1"	460
A408	8	5	STR.	52'-10"	441
A409	8	5	STR.	50'- 8"	423
A410	8	5	STR.	48'- 5"	404
A411	8	5	STR.	46'- 2"	385
A412	8	5	STR.	44'- 0"	367
A413	8	5	STR.	41'- 9"	348
A414	8	5	STR.	39'- 6"	330
A415	8	5	STR.	37'- 4"	312
A416	8	5	STR.	35'- 1"	293
A417	8	5	STR.	32'-10"	274
A418	8	5	STR.	30'- 8"	256
A419	8	5	STR.	28'- 5"	237
A420	8	5	STR.	26'- 2"	218
A421	8	5	STR.	24'- 0"	200
A422	8	5	STR.	21'- 9"	181
A423	8	5	STR.	19'- 7"	163
A424	8	5	STR.	17'- 4"	145
A425	8	5	STR.	15'- 1"	126
A426	8	5	STR.	12'-11"	108
A427	8	5	STR.	10'- 8"	89
A428	8	5	STR.	8'- 5"	70
A429	8	5	STR.	6'- 3"	52
A430	8	5	STR.	4'- 0"	33

* THESE BARS ARE EPOXY COATED.

BAR	NO.	SIZE	TYPE	LENGTH	WEIGHT
* B3	204	4	STR.	26'- 8"	3,634
B4	200	5	STR.	52'- 1"	10,865
* B7	67	4	STR.	2'- 6"	112
* D1	236	5	STR.	4'- 0"	985
* G1	4	5	STR.	46'- 0"	192
* J1	178	4	4	1'- 5"	168
* K1	4	5	1	5'- 1"	21
* K2	28	5	2	7'- 7"	221
* K3	4	5	2	6'-10"	29
* K4	28	5	STR.	10'- 2"	297
* K5	4	5	STR.	7'- 8"	32
* S2	128	4	3	3'-10"	328

REINFORCING STEEL= 29,083 LBS.

EPOXY COATED REINFORCING STEEL= 24,226 LBS.

VOID

B.W. Jordan

* THESE BARS ARE EPOXY COATED.

SPAN "C"

BAR	NO.	SIZE	TYPE	LENGTH	WEIGHT
* A7	85	5	STR.	58'- 9"	5,208
* A8	85	5	STR.	33'- 3"	2,948
* A9	176	5	STR.	41'- 8"	7,649
A10	170	5	STR.	46'- 0"	8,156
A11	192	5	STR.	37'- 3"	7,460
* A501	8	5	STR.	48'- 2"	402
* A502	8	5	STR.	45'-11"	383
* A503	8	5	STR.	43'- 8"	364
* A504	8	5	STR.	41'- 6"	346
* A505	8	5	STR.	39'- 3"	328
* A506	8	5	STR.	37'- 1"	309
* A507	8	5	STR.	34'-10"	291
* A508	8	5	STR.	32'- 7"	272
* A509	8	5	STR.	30'- 5"	254
* A510	8	5	STR.	28'- 2"	235
* A511	8	5	STR.	25'-11"	216
* A512	8	5	STR.	23'- 9"	198
* A513	8	5	STR.	21'- 6"	179
* A514	8	5	STR.	19'- 3"	161
* A515	8	5	STR.	17'- 1"	143
* A516	8	5	STR.	14'-10"	124
* A517	8	5	STR.	12'- 7"	105
* A518	8	5	STR.	10'- 5"	87
* A519	8	5	STR.	8'- 2"	68
* A520	8	5	STR.	5'-11"	49
* A521	8	5	STR.	3'- 9"	31
* A522	8	5	STR.	39'- 6"	330
* A523	8	5	STR.	37'- 3"	311
* A524	8	5	STR.	35'- 0"	292
* A525	8	5	STR.	32'-10"	274
* A526	8	5	STR.	30'- 7"	255
* A527	8	5	STR.	28'- 4"	236
* A528	8	5	STR.	26'- 2"	218
* A529	8	5	STR.	23'-11"	200
* A530	8	5	STR.	21'- 9"	181
* A531	8	5	STR.	19'- 6"	163
* A532	8	5	STR.	17'- 3"	144
* A533	8	5	STR.	15'- 0"	125
* A534	8	5	STR.	12'-10"	107
* A535	8	5	STR.	10'- 7"	88
* A536	8	5	STR.	8'- 4"	70
* A537	8	5	STR.	6'- 2"	51
* A538	8	5	STR.	3'-11"	33

* THESE BARS ARE EPOXY COATED.

BAR	NO.	SIZE	TYPE	LENGTH	WEIGHT
A601	8	5	STR.	52'- 7"	439
A602	8	5	STR.	50'- 4"	420
A603	8	5	STR.	48'- 1"	401
A604	8	5	STR.	45'-11"	383
A605	8	5	STR.	43'- 8"	364
A606	8	5	STR.	41'- 6"	346
A607	8	5	STR.	39'- 3"	328
A608	8	5	STR.	37'- 0"	309
A609	8	5	STR.	34'-10"	291
A610	8	5	STR.	32'- 7"	272
A611	8	5	STR.	30'- 4"	253
A612	8	5	STR.	28'- 2"	235
A613	8	5	STR.	25'-11"	216
A614	8	5	STR.	23'- 8"	197
A615	8	5	STR.	21'- 6"	179
A616	8	5	STR.	19'- 3"	161
A617	8	5	STR.	17'- 0"	142
A618	8	5	STR.	14'-10"	124
A619	8	5	STR.	12'- 7"	105
A620	8	5	STR.	10'- 4"	86
A621	8	5	STR.	8'- 2"	68
A622	8	5	STR.	5'-11"	49
A623	8	5	STR.	3'- 9"	31
A624	8	5	STR.	35'- 0"	292
A625	8	5	STR.	32'-10"	274
A626	8	5	STR.	30'- 7"	255
A627	8	5	STR.	28'- 4"	236
A628	8	5	STR.	26'- 2"	218
A629	8	5	STR.	23'-11"	200
A630	8	5	STR.	21'- 8"	181
A631	8	5	STR.	19'- 6"	163
A632	8	5	STR.	17'- 3"	144
A633	8	5	STR.	15'- 0"	125
A634	8	5	STR.	12'-10"	107
A635	8	5	STR.	10'- 7"	88
A636	8	5	STR.	8'- 4"	70
A637	8	5	STR.	6'- 2"	51
A638	8	5	STR.	3'-11"	33
* B3	256	4	STR.	26'- 8"	4,560
B4	256	5	STR.	52'- 1"	13,907
* B7	67	4	STR.	2'- 6"	112
* G2	4	5	STR.	57'- 4"	239
* J1	230	4	4	1'- 5"	218
* K1	8	5	1	5'- 1"	42
* K2	36	5	2	7'- 7"	285
* K4	40	5	STR.	10'- 2"	424
* S2	160	4	3	3'-10"	410

REINFORCING STEEL= 37,359 LBS.

EPOXY COATED REINFORCING STEEL= 29,718 LBS.

* THESE BARS ARE EPOXY COATED.

SPAN "D"

BAR	NO.	SIZE	TYPE	LENGTH	WEIGHT
* A12	82	5	STR.	44'- 8"	3,820
A13	82	5	STR.	44'- 8"	3,820
* A701	8	5	STR.	42'-11"	358
* A702	8	5	STR.	40'- 9"	340
* A703	8	5	STR.	38'- 6"	321
* A704	8	5	STR.	36'- 3"	302
* A705	8	5	STR.	34'- 1"	284
* A706	8	5	STR.	31'-10"	266
* A707	8	5	STR.	29'- 7"	247
* A708	8	5	STR.	27'- 5"	229
* A709	8	5	STR.	25'- 2"	210
* A710	8	5	STR.	22'-11"	191
* A711	8	5	STR.	20'- 9"	173
* A712	8	5	STR.	18'- 6"	154
* A713	8	5	STR.	16'- 3"	136
* A714	8	5	STR.	14'- 1"	118
* A715	8	5	STR.	11'-10"	99
* A716	8	5	STR.	9'- 8"	81
* A717	8	5	STR.	7'- 5"	62
* A718	8	5	STR.	5'- 2"	43
* A719	8	5	STR.	3'- 0"	25
A801	8	5	STR.	42'-11"	358
A802	8	5	STR.	40'- 9"	340
A803	8	5	STR.	38'- 6"	321
A804	8	5	STR.	36'- 3"	302
A805	8	5	STR.	34'- 1"	284
A806	8	5	STR.	31'-10"	266
A807	8	5	STR.	29'- 7"	247
A808	8	5	STR.	27'- 5"	229
A809	8	5	STR.	25'- 2"	210
A810	8	5	STR.	22'-11"	191
A811	8	5	STR.	20'- 9"	173
A812	8	5	STR.	18'- 6"	154
A813	8	5	STR.	16'- 3"	136
A814	8	5	STR.	14'- 1"	118
A815	8	5	STR.	11'-10"	99
A816	8	5	STR.	9'- 8"	81
A817	8	5	STR.	7'- 5"	62
A818	8	5	STR.	5'- 2"	43
A819	8	5	STR.	3'- 0"	25
* B5	128	4	STR.	17'- 6"	1,496
B6	128	5	STR.	33'-10"	4,517
* B7	21	4	STR.	2'- 6"	35
* G2	4	5	STR.	57'- 4"	239
* J1	115	4	4	1'- 5"	109
* K1	8	5	1	5'- 1"	42
* K2	36	5	2	7'- 7"	285
* K4	40	5	STR.	10'- 2"	424
* S1	80	4	3	4'- 2"	223
* S2	80	4	3	3'-10"	205

REINFORCING STEEL= 11,976 LBS.

EPOXY COATED REINFORCING STEEL= 10,517 LBS.

* THESE BARS ARE EPOXY COATED.

SUPERSTRUCTURE REINFORCING STEEL LENGTHS ARE BASED ON THE FOLLOWING MINIMUM SPLICE LENGTHS		
BAR SIZE	SUPERSTRUCTURE AND APPROACH SLABS EXCEPT PARAPET AND BARRIER RAIL	PARAPET AND BARRIER RAIL
#4	1'-2"	1'-7"
#5	1'-5"	2'-0"
#6	1'-10"	2'-7"
#8	3'-4"	4'-7"

PROJECT NO. 8.1236903

JOHNSTON COUNTY

STATION: 536+91.47 -L-

SHEET 1 OF 2

STATE OF NORTH CAROLINA
DEPARTMENT OF TRANSPORTATION
RALEIGH

SUPERSTRUCTURE

BILL OF MATERIAL

REVISIONS								SHEET NO.
NO.	BY:	DATE:	NO.	BY:	DATE:			S-24
1			3					TOTAL SHEETS
2			4					107

239

STR.*10

DRAWN BY: MIKE BRITT DATE: 3-30-88
CHECKED BY: Don Hodge DATE: 5-11-88

CADD 1492 10 SBM.DGN

REINFORCING BAR SCHEDULE

STAGE 2 CONSTRUCTION

SPAN "A"

BAR	NO.	SIZE	TYPE	LENGTH	WEIGHT
* A14	43	5	STR.	19'- 7"	878
A15	43	5	STR.	19'- 7"	878
* A901	8	5	STR.	17'- 5"	145
* A902	8	5	STR.	15'- 2"	127
* A903	8	5	STR.	12'-11"	108
* A904	8	5	STR.	10'- 9"	90
* A905	8	5	STR.	8'- 6"	71
* A906	8	5	STR.	6'- 4"	53
* A907	8	5	STR.	4'- 1"	34
A908	8	5	STR.	17'- 5"	145
A909	8	5	STR.	15'- 2"	127
A910	8	5	STR.	12'-11"	108
A911	8	5	STR.	10'- 9"	90
A912	8	5	STR.	8'- 6"	71
A913	8	5	STR.	6'- 4"	53
A914	8	5	STR.	4'- 1"	34
* B1	28	4	STR.	16'- 9"	313
B2	28	5	STR.	32'- 3"	942
* G3	2	5	STR.	24'- 4"	51
* J1	25	4	4	1'- 5"	24
* K1	4	5	1	5'- 1"	21
* K2	4	5	2	7'- 7"	32
* K3	4	5	2	6'-10"	29
* K4	4	5	STR.	10'- 2"	42
* K5	4	5	STR.	7'- 8"	32
* S1	16	4	3	4'- 2"	45
* S2	16	4	3	3'-10"	41

REINFORCING STEEL= 2,448 LBS.

EPOXY COATED
REINFORCING STEEL= 2,136 LBS.

* THESE BARS ARE EPOXY COATED.

SPAN "B"

BAR	NO.	SIZE	TYPE	LENGTH	WEIGHT
* A14	213	5	STR.	19'- 7"	4,351
A15	213	5	STR.	19'- 7"	4,351
* A901	8	5	STR.	17'- 5"	145
* A902	8	5	STR.	15'- 2"	127
* A903	8	5	STR.	12'-11"	108
* A904	8	5	STR.	10'- 9"	90
* A905	8	5	STR.	8'- 6"	71
* A906	8	5	STR.	6'- 4"	53
* A907	8	5	STR.	4'- 1"	34
A908	8	5	STR.	17'- 5"	145
A909	8	5	STR.	15'- 2"	127
A910	8	5	STR.	12'-11"	108
A911	8	5	STR.	10'- 9"	90
A912	8	5	STR.	8'- 6"	71
A913	8	5	STR.	6'- 4"	53
A914	8	5	STR.	4'- 1"	34
* B3	56	4	STR.	26'- 8"	998
B4	56	5	STR.	52'- 1"	3,042
* G3	2	5	STR.	24'- 4"	51
* J1	50	4	4	1'- 5"	47
* K1	4	5	1	5'- 1"	21
* K2	4	5	2	7'- 7"	32
* K3	4	5	2	6'-10"	29
* K4	4	5	STR.	10'- 2"	42
* K5	4	5	STR.	7'- 8"	32
* S2	32	4	3	3'-10"	82

REINFORCING STEEL= 8,021 LBS.

EPOXY COATED
REINFORCING STEEL= 6,313 LBS.

* THESE BARS ARE EPOXY COATED.

VOID
BWoodard

BAR TYPES

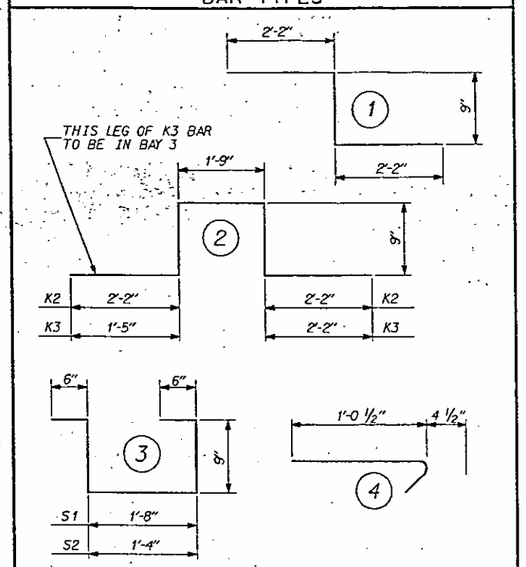

ALL BAR DIMENSIONS ARE OUT TO OUT

SUPERSTRUCTURE BILL OF MATERIAL
(FOR STAGE 1 CONSTRUCTION)

	CLASS A-A CONCRETE	REINFORCING STEEL	EPOXY COATED REINFORCING STEEL
	(CU.YDS.)	(LBS.)	(LBS.)
SPAN "A"	79.0	8,910	8,218
SPAN "B"	236.0	29,083	24,226
SPAN "C"	301.1	37,359	29,718
SPAN "D"	105.5	11,976	10,517
TOTALS **	721.5	87,328	72,679

SUPERSTRUCTURE BILL OF MATERIAL
(FOR STAGE 2 CONSTRUCTION)

	CLASS A-A CONCRETE	REINFORCING STEEL	EPOXY COATED REINFORCING STEEL
	(CU.YDS.)	(LBS.)	(LBS.)
SPAN "A"	21.5	2,448	2,136
SPAN "B"	65.5	8,021	6,313
TOTALS **	87.0	10,469	8,449

** QUANTITIES FOR BARRIER RAIL ARE NOT INCLUDED

SUPERSTRUCTURE REINFORCING STEEL LENGTHS ARE BASED ON THE FOLLOWING MINIMUM SPLICE LENGTHS		
BAR SIZE	SUPERSTRUCTURE AND APPROACH SLABS EXCEPT PARAPET AND BARRIER RAIL	PARAPET AND BARRIER RAIL
#4	1'-2"	1'-7"
#5	1'-5"	2'-0"
#6	1'-10"	2'-7"
#8	3'-4"	4'-7"

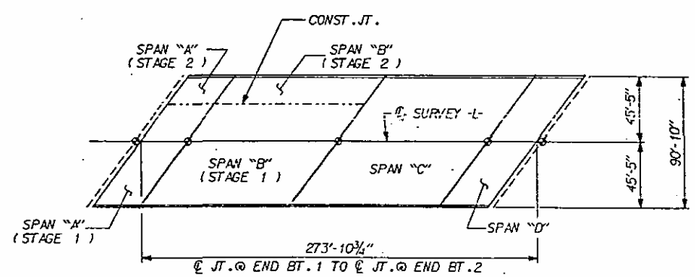

LAYOUT FOR COMPUTING AREA
OF REINFORCED CONCRETE DECK SLAB
~~(SQ. FT. = 24,879.)~~
VOID

PROJECT NO. 8.1236903
JOHNSTON COUNTY
STATION: 536+91.47 -L-

SHEET 2 OF 2

STATE OF NORTH CAROLINA
DEPARTMENT OF TRANSPORTATION
RALEIGH

SUPERSTRUCTURE
BILL OF MATERIAL

REVISIONS								SHEET NO.
NO.	BY:	DATE:	NO.	BY:	DATE:			~~S-25~~ 240
1			3					TOTAL SHEETS
2			4					~~107~~

DRAWN BY: MIKE BRITT DATE: 3-30-88
CHECKED BY: Don Hodge DATE: 5-11-88

CADD 1492 10 SBM.DGN

STR.#10

HP 12X53 STEEL PILES			
NO	LENGTH	NO	LENGTH
1	55.2	8	53.5
2	55.5	9	56.2
3	53.2	10	54.1
4	57.9	11	56.8
5	57.9		
6	55.6		
7	56.4		

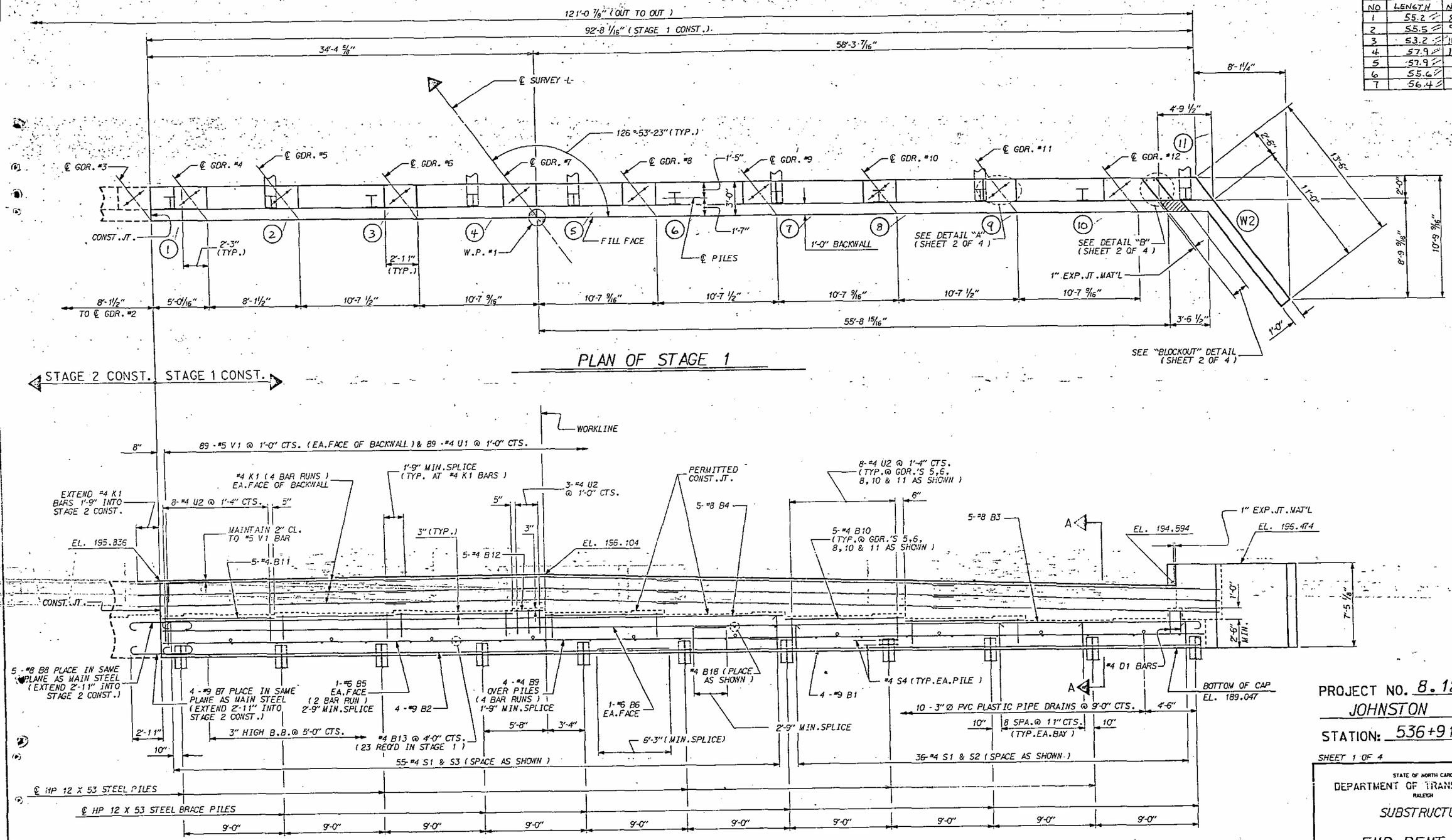

PROJECT NO. 8.1236903

JOHNSTON COUNTY

STATION: 536+91.47 -L-

SHEET 1 OF 4

STATE OF NORTH CAROLINA
DEPARTMENT OF TRANSPORTATION
RALEIGH

SUBSTRUCTURE

END BENT No. 1

REVISIONS						SHEET NO.
NO.	BY:	DATE:	NO.	BY:	DATE:	S-36
1			3			TOTAL SHEETS
2			4			107

DRAWN BY: MIKE BRITT DATE: 12-21-87
CHECKED BY: Don Hodges DATE: 5-10-88

CADD1492 10 EB1.DGN

STR.#10

241

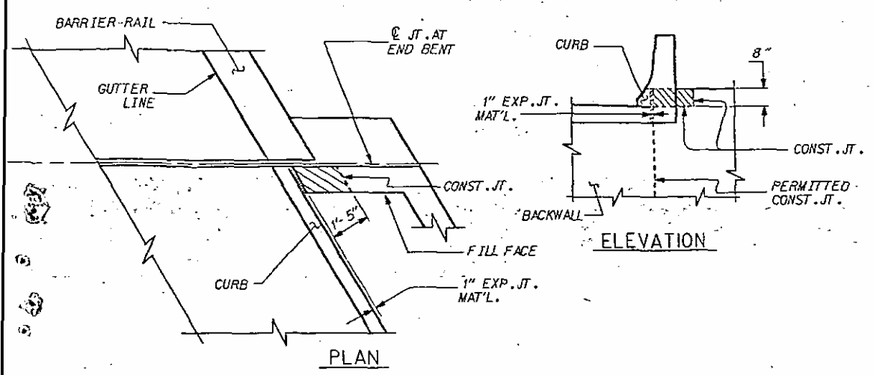

BLOCKOUT IN WING WALL FOR FITTING COMPRESSION JOINT SEAL

NOTE: THE CONCRETE IN THE CROSS-HATCHED AREA OF THE WING SHALL BE POURED AFTER THE JOINT BETWEEN THE DECK AND APPROACH SLAB HAS BEEN SAWED AND THE BARRIER RAIL IS CAST IF SLIP FORMING IS USED.

HP 12X53 STEEL PILES	
No.	LENGTH
1	53.2
2	50.8
3	55.4

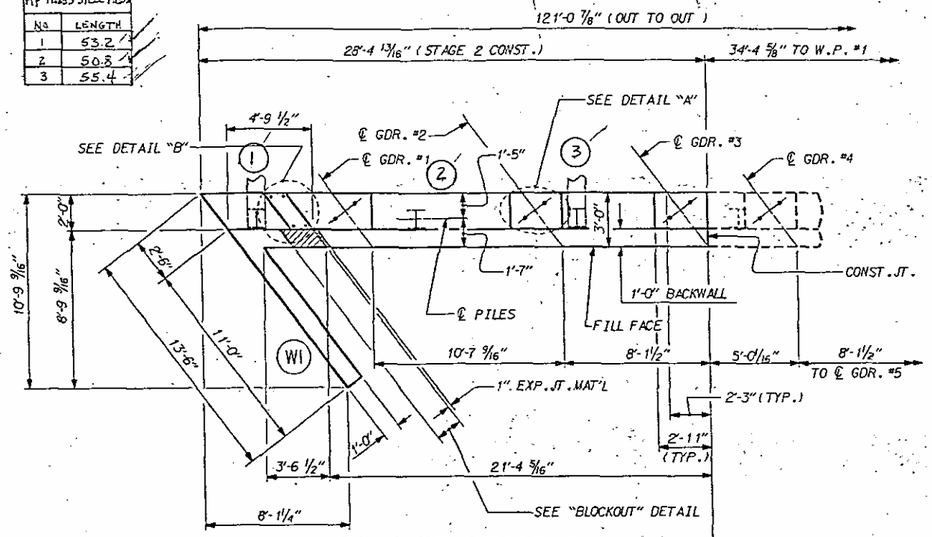

PLAN OF STAGE 2

NOTES

STIRRUPS IN CAP MAY BE SHIFTED AS NECESSARY TO CLEAR ANCHOR BOLTS.

FOR EPOXY PROTECTIVE COATING, SEE SPECIAL PROVISIONS.

PIPE DRAINS MAY BE SHIFTED SLIGHTLY AS NECESSARY TO CLEAR REINFORCING STEEL AND ANCHOR BOLTS.

THE TOP SURFACE AREAS OF THE END BENT CAP SHALL BE CURED IN ACCORDANCE WITH THE STANDARD SPECIFICATIONS EXCEPT THAT THE MEMBRANE CURING COMPOUND METHOD SHALL NOT BE USED.

FOR PROTECTION OF SUBSTRUCTURE, SEE SPECIAL PROVISIONS.

BACKWALL SHALL BE PLACED BEFORE APPLYING THE EPOXY PROTECTIVE COATING.

THE TOP SURFACE OF THE END BENT CAP EXCEPT THE BRIDGE SEAT BUILDUPS SHALL BE SLOPED TRANSVERSELY FROM THE FILL FACE TO THE BACK FACE AT THE RATE OF 1/4" PER FOOT.

THE CONCRETE IN THE SHADED AREA OF THE WING SHALL BE POURED AFTER THE JOINT IN THE DECK AND THE APPROACH SLAB HAS BEEN SAWED AND THE BARRIER RAIL IS CAST IF SLIP FORMING IS USED.

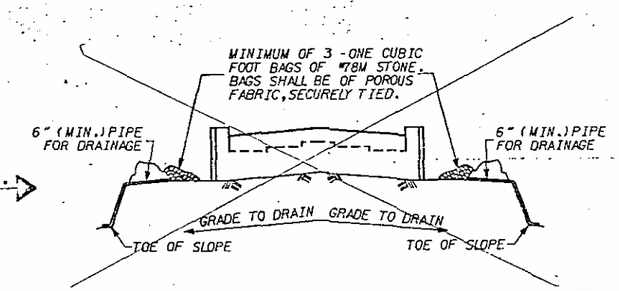

BAGGED STONE AND PIPE SHALL BE PLACED IMMEDIATELY AFTER COMPLETION OF END BENT EXCAVATION. PIPE MAY BE EITHER CONCRETE, CORRUGATED STEEL, CORRUGATED ALUMINUM ALLOY, OR CORRUGATED PLASTIC. PERFORATED PIPE WILL NOT BE ALLOWED.

BAGGED STONE SHALL REMAIN IN PLACE UNTIL THE ENGINEER DIRECTS THAT IT BE REMOVED. THE CONTRACTOR SHALL REMOVE AND DISPOSE OF SILT ACCUMULATIONS AT BAGGED STONE WHEN SO DIRECTED BY THE ENGINEER. BAGS SHALL BE REMOVED AND REPLACED WHENEVER THE ENGINEER DETERMINES THAT THEY HAVE DETERIORATED AND LOST THEIR EFFECTIVENESS.

NO SEPARATE PAYMENT WILL BE MADE FOR THIS WORK AND THE ENTIRE COST OF THIS WORK SHALL BE INCLUDED IN THE UNIT CONTRACT PRICE BID FOR THE SEVERAL PAY ITEMS.

TEMPORARY DRAINAGE AT END BENT

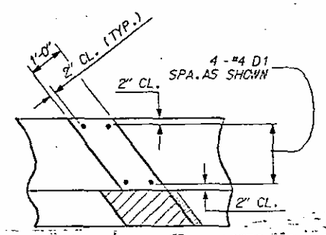

DETAIL "B"

(TYPICAL EA. SIDE)

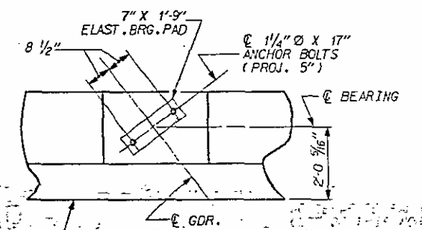

DETAIL "A"

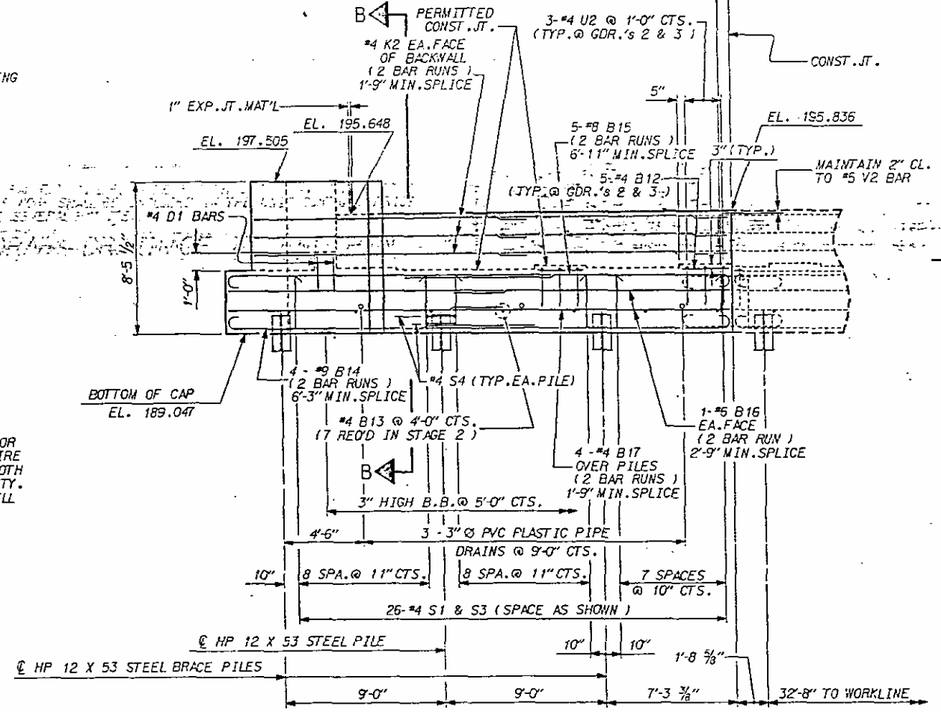

ELEVATION OF STAGE 2

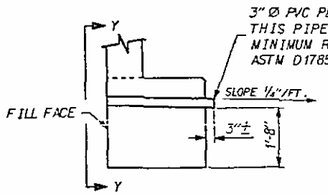

SECTION THRU CAP

3" Ø PVC PLASTIC PIPE DRAINS. THIS PIPE SHALL MEET THE MINIMUM REQUIREMENTS OF ASTM D1785.

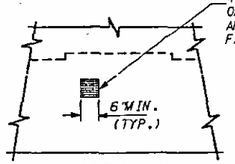

VIEW Y-Y

6" SQUARE ALUMINUM OR GALVANIZED STEEL WIRE 4 MESH HARDWARE CLOTH OF COMMERCIAL QUALITY. ANCHOR FIRMLY TO FILL FACE.

PIPE DRAIN DETAILS

NOTE: NO SEPARATE PAYMENT WILL BE MADE FOR FURNISHING AND INSTALLING THE PVC PLASTIC PIPE DRAINS, HARDWARE CLOTH AND FASTENERS. THE ENTIRE COST OF THIS WORK SHALL BE INCLUDED IN THE UNIT CONTRACT PRICE BID FOR THE SEVERAL PAY ITEMS.

PROJECT NO. 8.1236903
JOHNSTON COUNTY
STATION: 536+91.47 -L-

SHEET 2 OF 4

STATE OF NORTH CAROLINA
DEPARTMENT OF TRANSPORTATION
RALEIGH

SUBSTRUCTURE

END BENT No. 1

REVISIONS						SHEET NO.
NO.	BY:	DATE:	NO.	BY:	DATE:	C-57
1			3			TOTAL SHEETS
2			4			197

242

DRAWN BY: MIKE BRITT DATE: 12-22-87
CHECKED BY: Don Yadon DATE: 5-12-88

CADD 1492 10 EB1.DGN

STR. #10

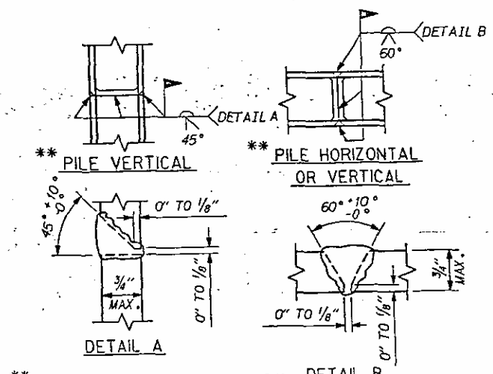

**POSITION OF PILE DURING WELDING.

PILE SPLICE DETAILS

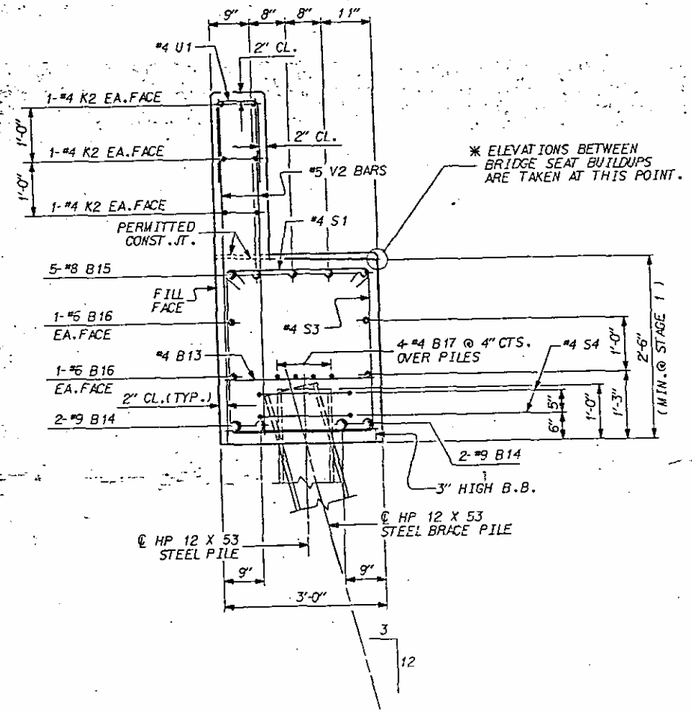

SECTION B-B

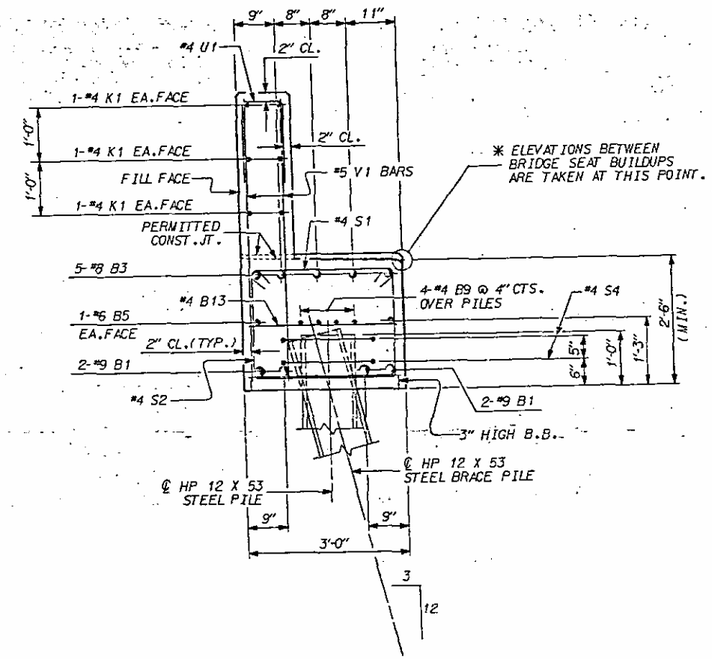

SECTION A-A

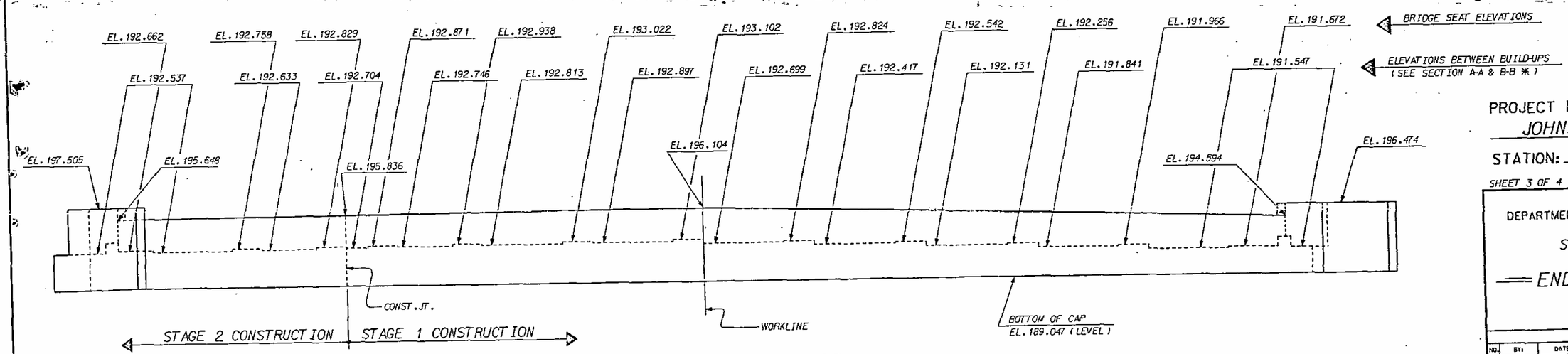

CAP ELEVATIONS DETAIL

PROJECT NO. 8.1236903

JOHNSTON COUNTY

STATION: 536+91.47 -L-

SHEET 3 OF 4

STATE OF NORTH CAROLINA
DEPARTMENT OF TRANSPORTATION
RALEIGH

SUBSTRUCTURE

END BENT No. 1

REVISIONS						SHEET NO.
NO.	BY:	DATE:	NO.	BY:	DATE:	~~S-33~~ 243
1			3			TOTAL SHEETS
2			4			~~707~~

DRAWN BY : MIKE BRITT DATE : 12-28-87
CHECKED BY : Don Hodge DATE : 2-10-88

CADD 1492 10 EB1.DGN

STR.-10

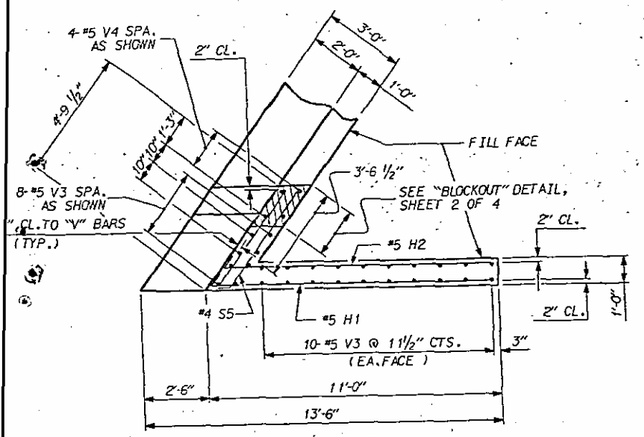

W1 PLAN OF LEFT WING
(STAGE 2 CONSTRUCTION)

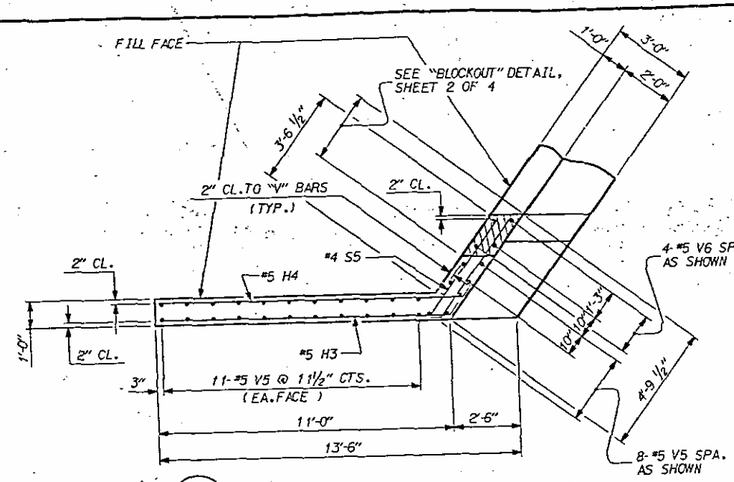

W2 PLAN OF RIGHT WING
(STAGE 1 CONSTRUCTION)

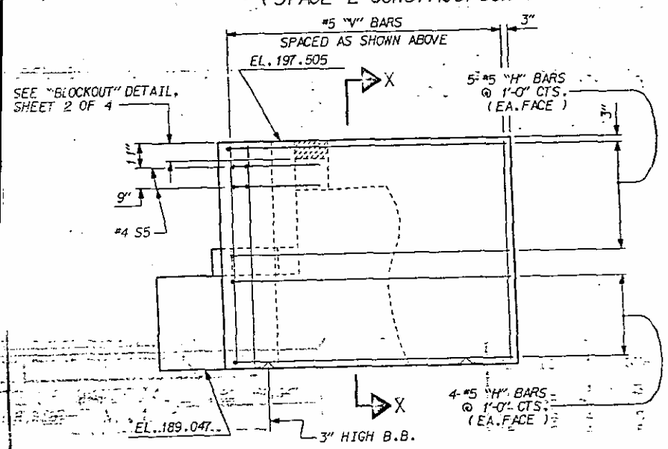

W1 ELEVATION OF LEFT WING
(STAGE 2 CONSTRUCTION)

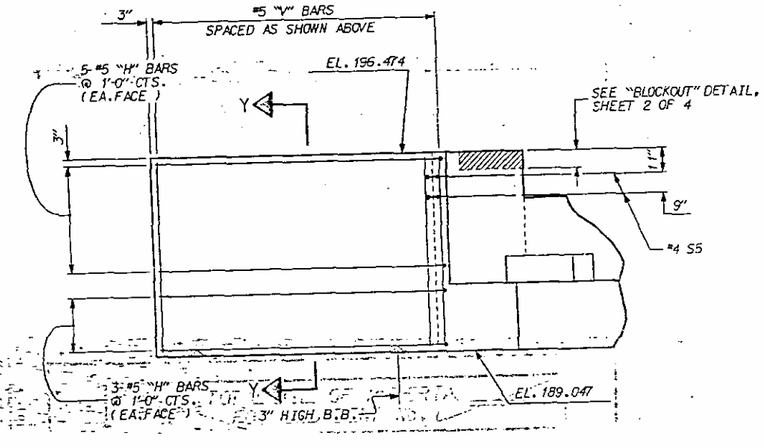

W2 ELEVATION OF RIGHT WING
(STAGE 1 CONSTRUCTION)

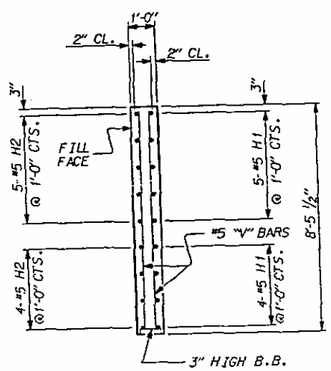

SECTION X-X

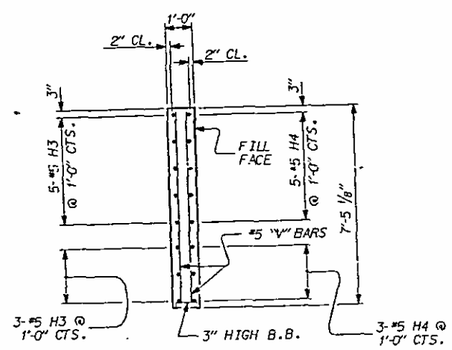

SECTION Y-Y

BILL OF MATERIAL

END BENT No. 1 (STAGE 1)

BAR	NO.	SIZE	TYPE	LENGTH	WEIGHT
B1	4	9	2	56'-10"	773
B2	4	9	2	46'-4"	630
B3	5	8	2	48'-5"	646
B4	5	8	2	56'-1"	749
B5	4	6	STR.	48'-8"	292
B6	2	6	STR.	49'-11"	150
B7	4	9	1	8'-4"	113
B8	5	8	1	7'-8"	102
B9	16	4	STR.	25'-0"	267
B10	25	4	STR.	10'-5"	174
B11	5	4	STR.	10'-1"	34
B12	5	4	STR.	2'-7"	9
B13	23	4	STR.	2'-8"	41
B18	3	4	STR.	2'-8"	5
D1	4	4	STR.	2'-0"	5
H3	8	5	7	11'-3"	94
H4	8	5	7	11'-9"	98
K1	24	4	STR.	25'-5"	407
S1	91	4	3	3'-5"	208
S2	36	4	4	7'-8"	184
S3	55	4	4	9'-5"	346
S4	22	4	9	6'-6"	96
S5	2	4	8	9'-5"	13
U1	89	4	5	8'-8"	218
U2	51	4	5	5'-8"	193
V1	178	5	STR.	5'-2"	959
V5	30	5	STR.	7'-1"	222
V6	4	5.	STR.	6'-5"	27

STAGE 1
REINFORCING STEEL = 7,055 LBS.

VOID Bill Worland

END BENT No. 1 (STAGE 2)

BAR	NO.	SIZE	TYPE	LENGTH	WEIGHT
B12	10	4	STR.	2'-7"	17
B13	7	4	STR.	2'-8"	12
B14	8	9	2	18'-5"	501
B15	10	8	2	18'-5"	492
B16	8	6	STR.	15'-5"	185
B17	8	4	STR.	14'-11"	80
D1	4	4	STR.	2'-0"	5
H1	9	5	6	11'-0"	103
H2	9	5	6	10'-6"	99
K2	12	4	STR.	14'-3"	114
S1	26	4	3	3'-5"	59
S3	26	4	4	9'-5"	164
S4	8	4	9	6'-6"	26
S5	2	4	8	9'-5"	13
U1	21	4	5	3'-8"	51
U2	6	4	5	5'-8"	23
V2	42	5	STR.	6'-3"	274
V3	28	5	STR.	8'-1"	236
V4	4	5	STR.	7'-5"	31

STAGE 2
REINFORCING STEEL = 2,485 LBS.

BAR TYPES

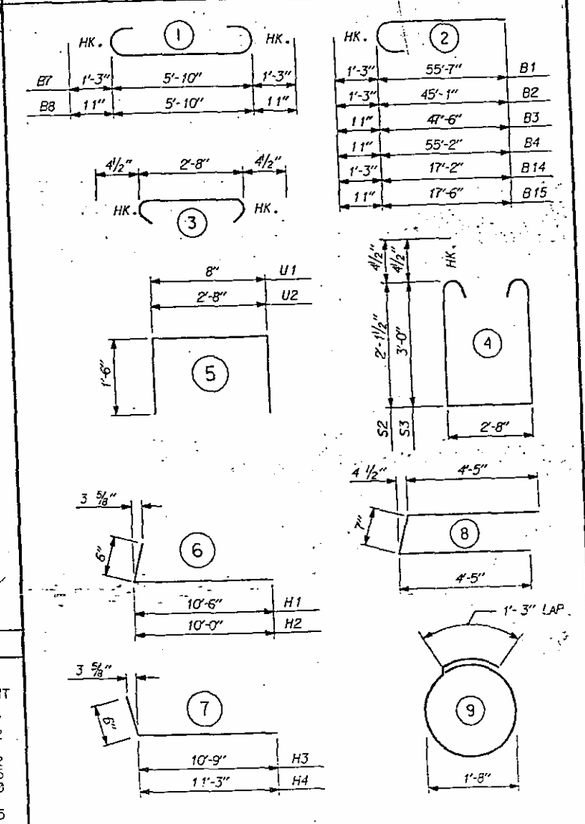

ALL BAR DIMENSIONS ARE CUT TO OUT.

TOTAL BILL OF MATERIAL FOR END BENT No. 1

VOID Bill Worland

	CLASS "A" CONCRETE	REINFORCING STEEL	HP 12 X 53 STEEL PILES	
	CU. YDS.	LBS.	No.	LIN. FT.
STAGE 1	48.7	7,055	11	605
STAGE 2	17.2	2,485	3	165
TOTAL	65.9	9,540	14	770

PROJECT NO. 8.1236903
JOHNSTON COUNTY
STATION: 536+91.47 -L-

SHEET 4 OF 4

STATE OF NORTH CAROLINA
DEPARTMENT OF TRANSPORTATION
RALEIGH

SUBSTRUCTURE

END BENT No. 1

REVISIONS								SHEET NO.
NO.	BY:	DATE:	NO.	BY:	DATE:			~~5-59~~ 244
1			3					TOTAL SHEETS
2			4					~~197~~

STR.-10

DRAWN BY : MIKE BRITT DATE : 12-29-87
CHECKED BY : Don Hodge DATE : 8-10-88
CADD 1492 10 EB1.DGN

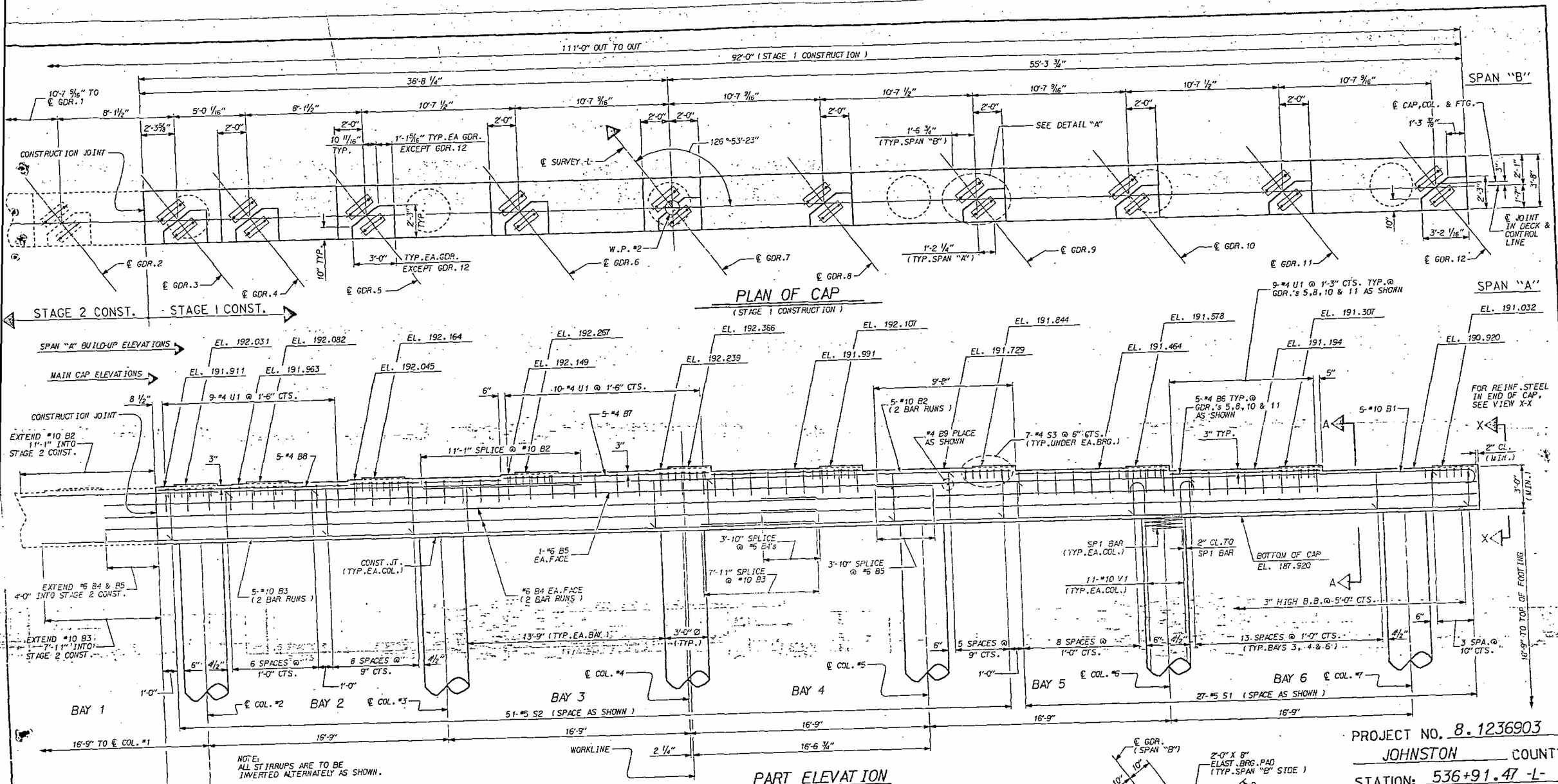

NOTE:
ALL STIRRUPS ARE TO BE INVERTED ALTERNATELY AS SHOWN.

PLAN OF CAP
(STAGE 1 CONSTRUCTION)

PART ELEVATION
(STAGE 1 CONSTRUCTION)

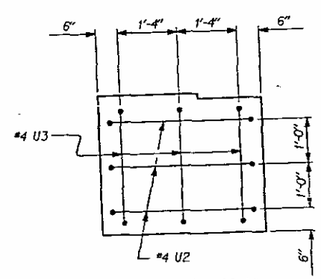

VIEW X-X

NOTE:
THE CONTRACTOR'S ATTENTION IS CALLED TO THE FACT THAT THE CENTERLINE JOINT IN THE DECK SLAB (CONTROL LINE) IS OFFSET 3" FROM THE CENTERLINE BENT, AND THE WORKPOINT IS OFFSET 2 1/4" FROM THE CENTERLINE OF COLUMN #4.

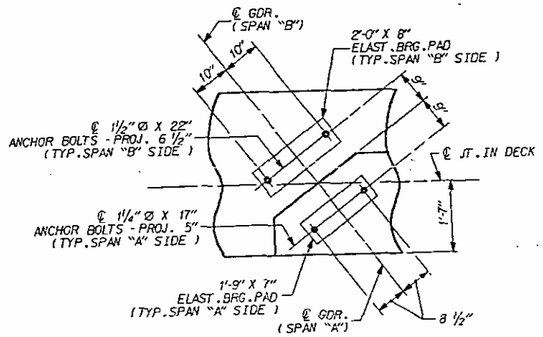

DETAIL "A"

PROJECT NO. 8.1236903
JOHNSTON COUNTY
STATION: 536+91.47 -L-

SHEET 1 OF 3

STATE OF NORTH CAROLINA
DEPARTMENT OF TRANSPORTATION
RALEIGH

SUBSTRUCTURE

BENT No. 1

REVISIONS								SHEET NO.
NO.	BY:	DATE:	NO.	BY:	DATE:			~~5-70~~ 245
1			3					TOTAL SHEETS
2			4					~~107~~

STR.#10

DRAWN BY: MIKE BRITT DATE: 3-8-88
CHECKED BY: Don Hodge DATE: 5-10-88
CADD 1492 10 BT 1.DGN

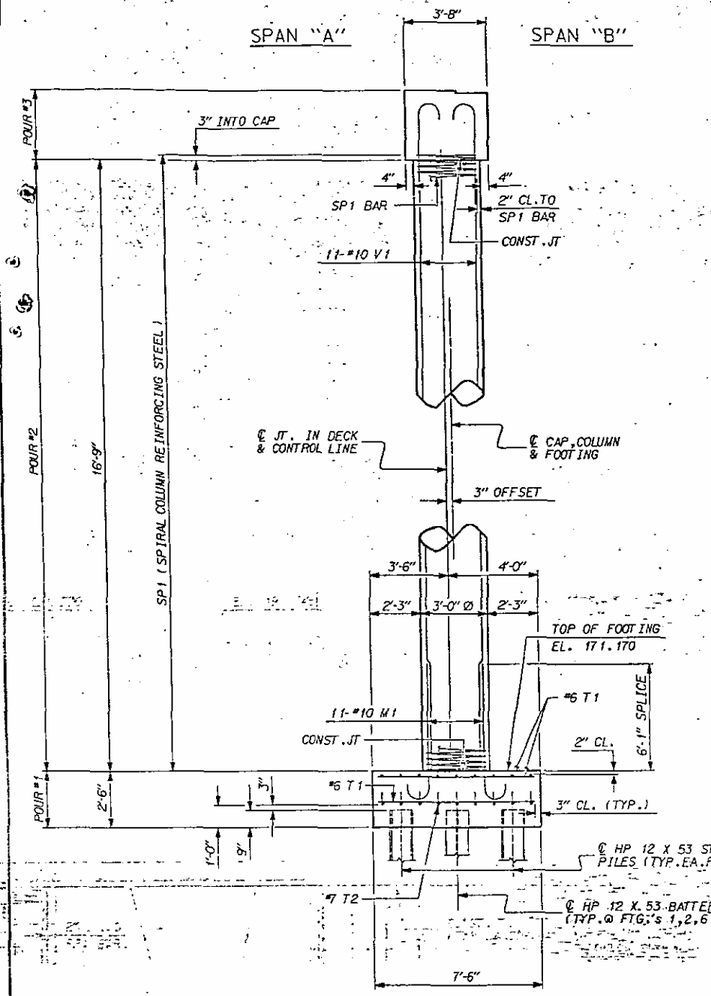

END ELEVATION

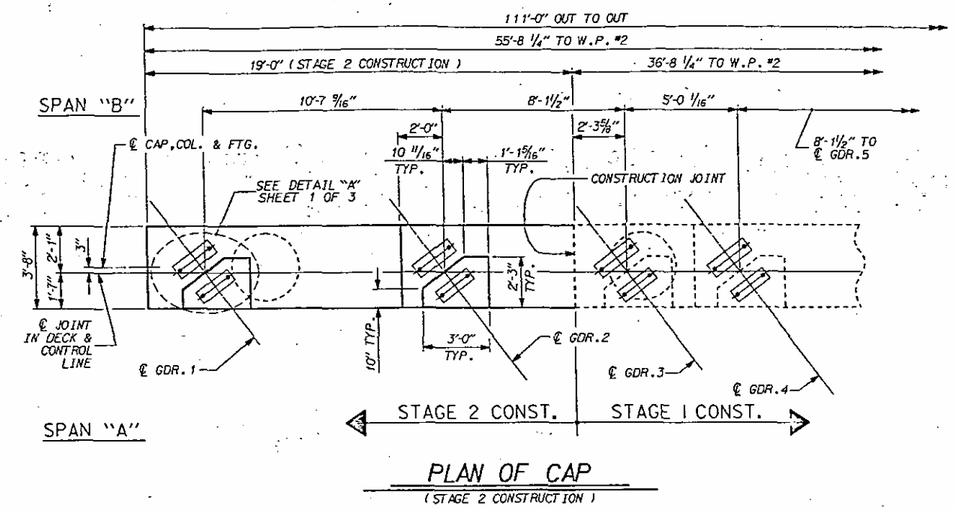

PLAN OF CAP

(STAGE 2 CONSTRUCTION)

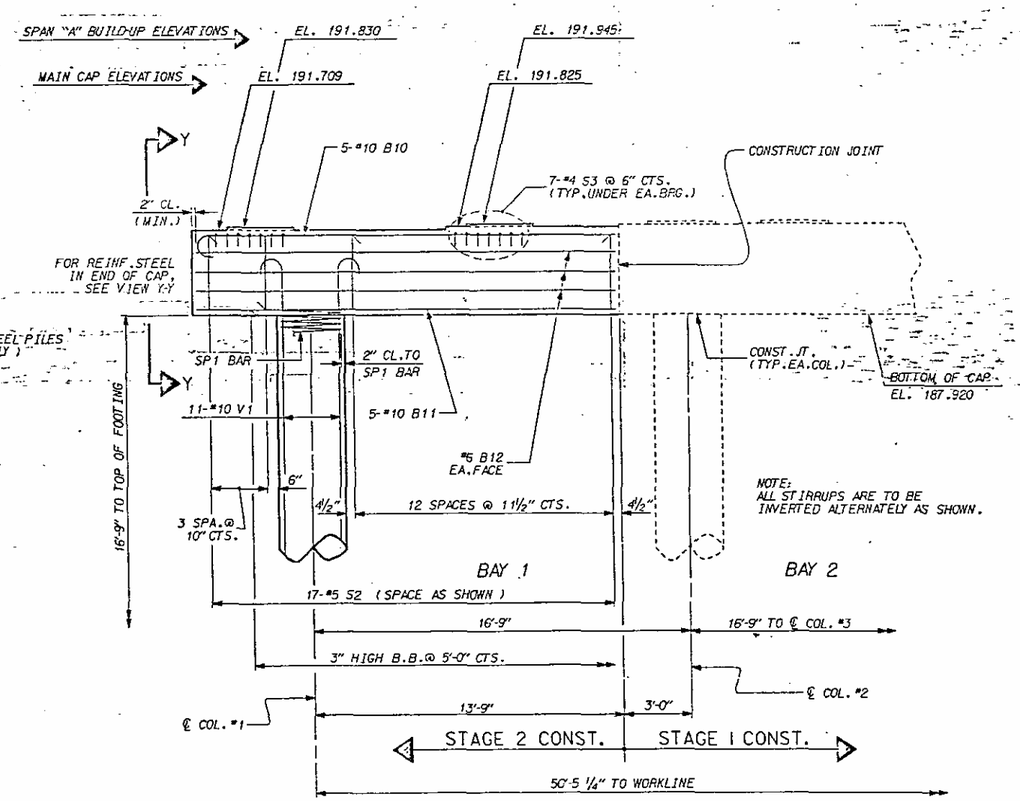

PART ELEVATION

(STAGE 2 CONSTRUCTION)

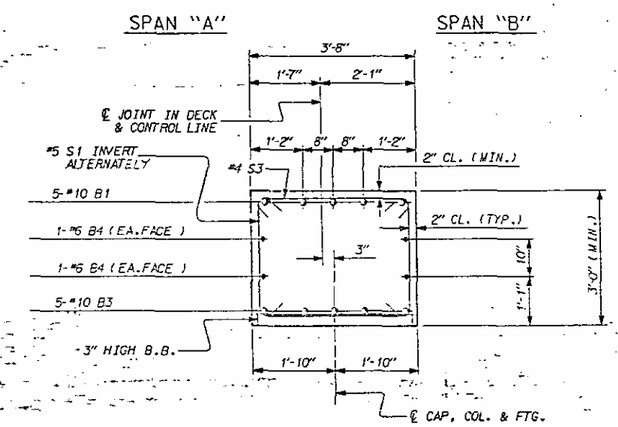

SECTION A-A

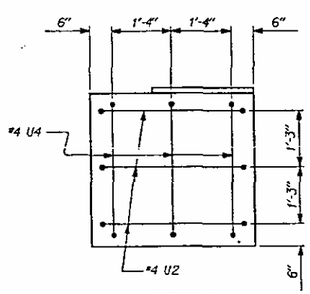

VIEW Y-Y

NOTES

STIRRUPS IN CAP MAY BE SHIFTED AS NECESSARY TO CLEAR ANCHOR BOLTS.

HOOKS ON " V " BARS MAY BE TURNED AS NECESSARY FOR PLACING REINFORCING STEEL

FOR SPIRAL COLUMN REINFORCING STEEL, SEE SPECIAL PROVISIONS.

FOR EPOXY PROTECTIVE COATING, SEE SPECIAL PROVISIONS.

THE TOP SURFACE AREAS OF THE BENT CAP SHALL BE CURED IN ACCORDANCE WITH THE STANDARD SPECIFICATIONS EXCEPT THAT THE MEMBRANE CURING COMPOUND METHOD SHALL NOT BE USED.

FOR PROTECTION OF SUBSTRUCTURE, SEE SPECIAL PROVISIONS.

THE CONTRACTOR'S ATTENTION IS CALLED TO THE FACT THAT THE CENTERLINE JOINT IN THE DECK SLAB (CONTROL LINE) IS OFFSET 3" FROM THE CENTERLINE BENT, AND THE WORKPOINT IS OFFSET 2 1/4" FROM THE CENTERLINE OF COLUMN #4.

FOR PILE SPLICE DETAIL, SEE END BENT NO.1.

COLUMN, FOOTING & PILE PLACEMENT AT COL.& FTG. # 1 SHALL NOT BE STARTED UNTIL STAGE 1 CONSTRUCTION IS COMPLETED.

PROJECT NO. 8.1236903
JOHNSTON COUNTY
STATION: 536+91.47 -L-

SHEET 2 OF 3

STATE OF NORTH CAROLINA
DEPARTMENT OF TRANSPORTATION
RALEIGH

SUBSTRUCTURE

BENT No. 1

REVISIONS						SHEET NO.
NO.	BY:	DATE:	NO.	BY:	DATE:	S-91
1			3			TOTAL SHEETS
2			4			197

DRAWN BY : MIKE BRITT DATE : 3-9-88
CHECKED BY : Don Yadon DATE : 5-10-88

CADD 1492 10 BT 1.DGN

STR.#10

246

53 STEEL PILES		H.P. 12 X 53 STEEL PILES			
E 2 CONST		STAGE 1 CONST.			
LENGTH		NO	LENGTH	NO	LENGTH
34.1		1	36.1	19	35.5
34.6		2	36.5	20	34.5
35.0		3	36.5	21	35.4
34.1		4	36.0	22	34.6
33.7		5	35.4	23	34.2
33.7		6	35.2	24	34.0
34.0		7	35.1	25	35.7
34.1		8	35.3	26	34.1
		9	36.3	27	34.1
		10	35.5	28	34.1
		11	36.0	29	36.0
		12	35.7	30	35.9
		13	36.4	31	36.0
		14	35.3	32	35.0
		15	35.8	33	35.2
		16	37.0	34	35.8
		17	35.0	35	35.8
		18	36.0	36	35.0

BAR TYPES

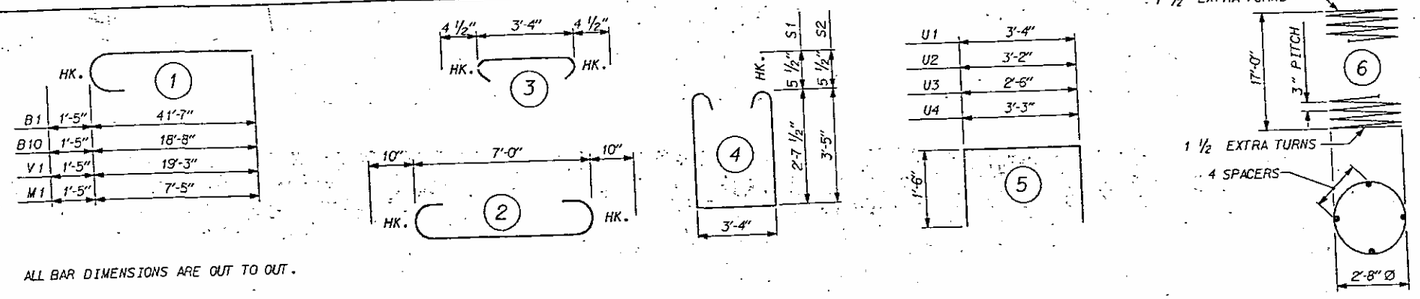

ALL BAR DIMENSIONS ARE OUT TO OUT.

BILL OF MATERIAL
BENT No. 1

STAGE 2

BAR	NO.	SIZE	TYPE	LENGTH	WEIGHT
B10	5	10	1	20' - 1"	432
B11	5	10	STR.	18' - 8"	402
B12	6	6	STR.	18' - 8"	168
S2	17	5	4	11' - 1"	197
S3	14	4	3	4' - 1"	38
U2	3	4	5	5' - 2"	12
U4	3	4	5	5' - 3"	13
V1	11	10	1	20' - 8"	978
M1	11	10	1	8' - 10"	418
T1	27	6	STR.	7' - 0"	284
T2	9	7	2	8' - 8"	159
SP1	1	-	6	585' - 10"	391

VOID

STAGE 1

BAR	NO.	SIZE	TYPE	LENGTH	WEIGHT
B1	5	10	1	43' - 0"	925
B2	10	10	STR.	41' - 1"	1,768
B3	10	10	STR.	53' - 10"	2,316
B4	8	6	STR.	49' - 10"	599
B5	2	6	STR.	58' - 1"	174
B6	20	4	STR.	10' - 5"	139
B7	5	4	STR.	14' - 3"	48
B8	5	4	STR.	13' - 1"	44
B9	3	4	STR.	3' - 4"	7
S1	27	5	4	9' - 6"	268
S2	51	5	4	11' - 1"	598
S3	70	4	3	4' - 1"	191
U1	55	4	5	6' - 4"	233
U2	3	4	5	5' - 2"	12
U3	3	4	5	5' - 6"	11
V1	66	10	1	20' - 8"	5,869
M1	66	10	1	8' - 10"	2,509
T1	162	6	STR.	7' - 0"	1,703
T2	54	7	2	8' - 8"	957
SP1	6	-	6	585' - 10"	2,348

VOID

* TOTAL QUANTITIES (STAGE 1) *

REINFORCING STEEL = 18,363 LBS.

SPIRAL COLUMN
REINFORCING STEEL= 2,348 LBS.

CLASS A CONCRETE BREAKDOWN

POUR #1 (FOOTINGS) ---- 11.3 CYS.
POUR #2 (COLUMNS) ---- 26.3 CYS.
POUR #3 (CAP) ---- 47.6 CYS.

CLASS A CONCRETE TOTAL = 105.2 CYS.

HP 12 X 53 STEEL PILES
NO. 36 LIN. FT. 1,260

* TOTAL QUANTITIES (STAGE 2) *

REINFORCING STEEL = 3,101 LBS.

SPIRAL COLUMN
REINFORCING STEEL= 391 LBS.

CLASS A CONCRETE BREAKDOWN

POUR #1 (FOOTING) ---- 5.12 CYS.
POUR #2 (COLUMN) ---- 4.4 CYS.
POUR #3 (CAP) ---- 9.9 CYS.

CLASS A CONCRETE TOTAL = 19.5 CYS.

HP 12 X 53 STEEL PILES
NO. 8 LIN. FT. 280

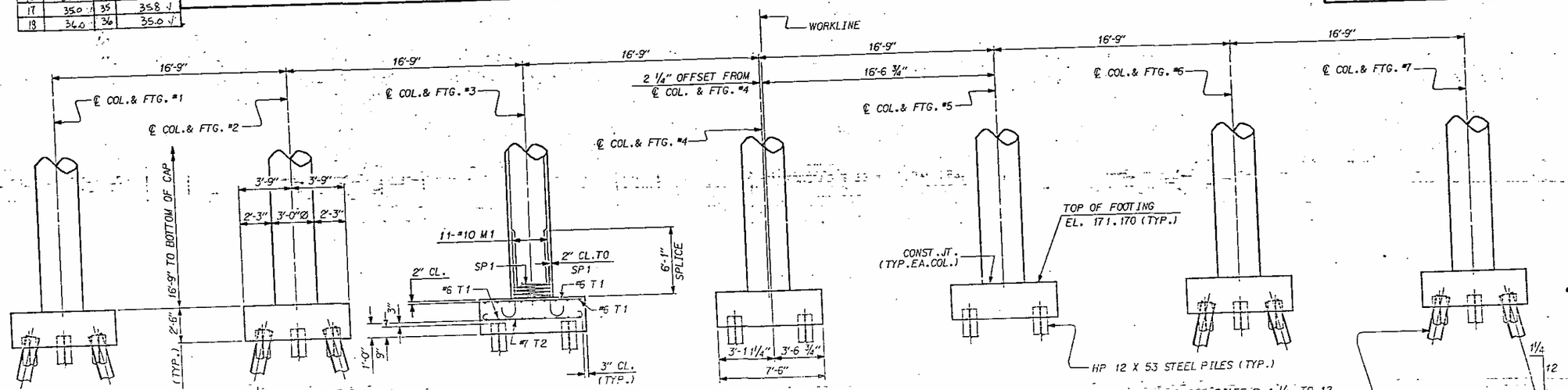

PART ELEVATION

DIMENSIONS & REINFORCING STEEL ARE TYPICAL IN EACH FOOTING & COLUMN
PILE LOCATION & LAYOUT VARIES AS SHOWN

NOTE:
COLUMN, FOOTING & PILE PLACEMENT AT COL. & FTG. #1 SHALL NOT BE STARTED UNTIL STAGE 1 CONSTRUCTION IS COMPLETED.

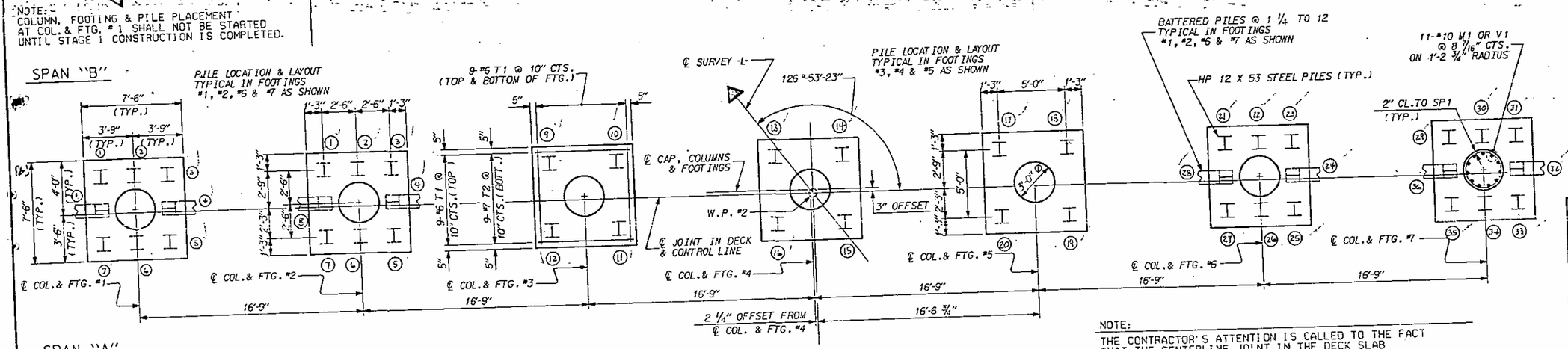

PLAN OF FOOTINGS

FOOTING DIMENSIONS & REINFORCING STEEL ARE TYPICAL IN EACH FOOTING
PILE LOCATION & LAYOUT VARIES AS SHOWN

NOTE:
THE CONTRACTOR'S ATTENTION IS CALLED TO THE FACT THAT THE CENTERLINE JOINT IN THE DECK SLAB (CONTROL LINE) IS OFFSET 3" FROM THE ℄ CAP, AND THE WORKPOINT IS OFFSET 2 1/4" FROM THE ℄ OF COLUMN #4.

PROJECT NO. 8.1236903
JOHNSTON COUNTY
STATION: 536+91.47 -L-

SHEET 3 OF 3

STATE OF NORTH CAROLINA
DEPARTMENT OF TRANSPORTATION
RALEIGH

SUBSTRUCTURE

BENT No. 1

REVISIONS						SHEET NO.
NO.	BY:	DATE:	NO.	BY:	DATE:	247
1			3			TOTAL SHEETS
2			4			497

STR.#10

DRAWN BY : MIKE BRITT DATE : 3-10-88
CHECKED BY : Don Hodges DATE : 5-10-88

CADD 1492 10 BT1.DGN

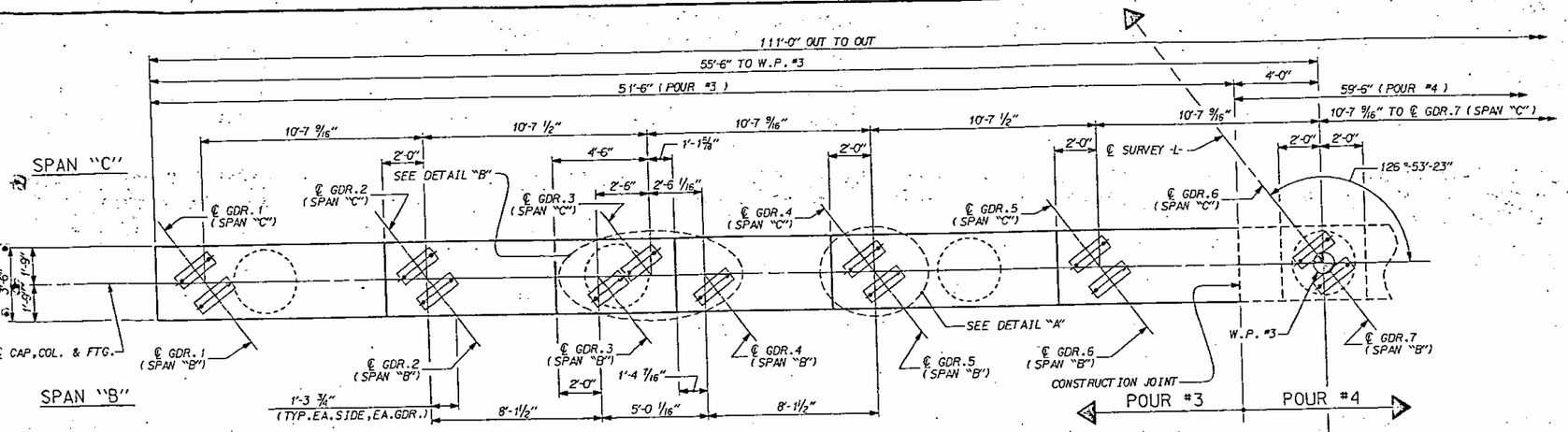

PLAN OF CAP
(LEFT SIDE)

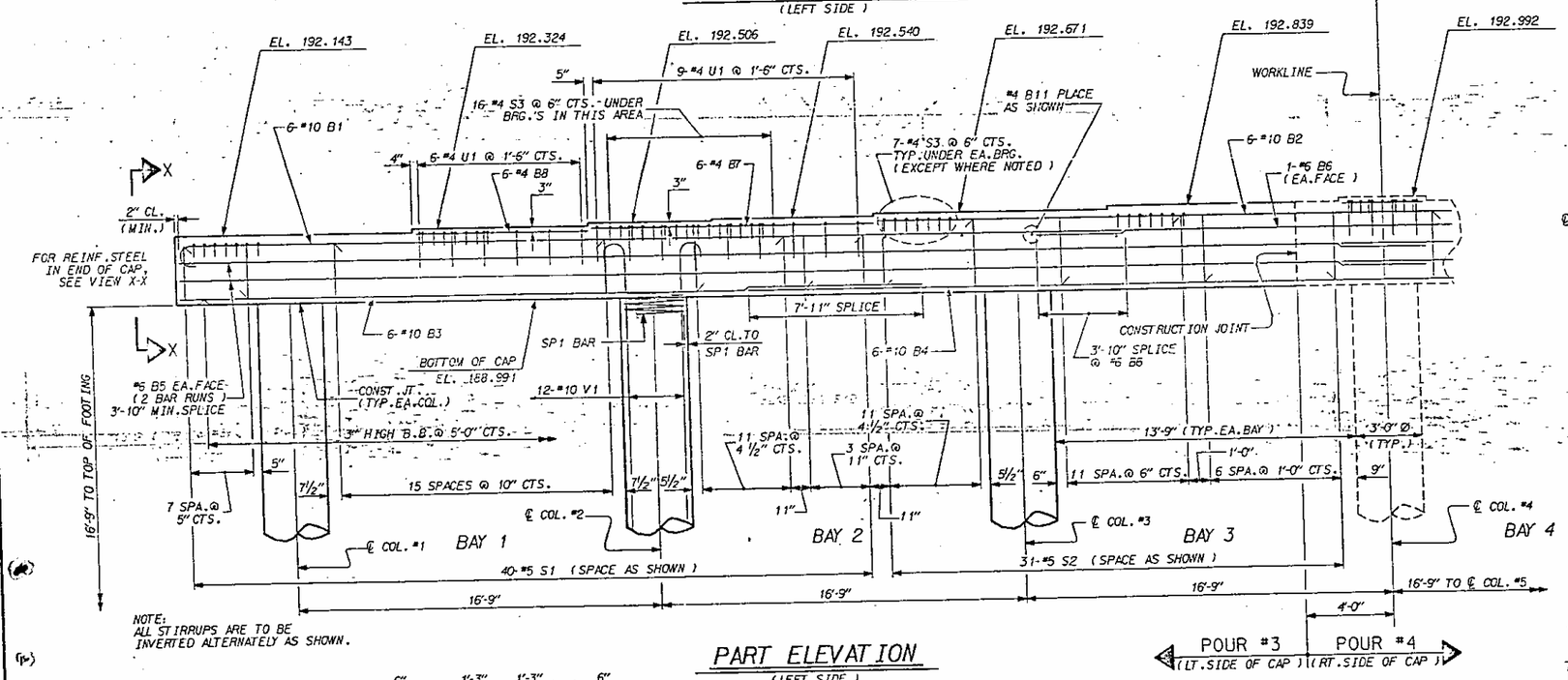

NOTE:
ALL STIRRUPS ARE TO BE INVERTED ALTERNATELY AS SHOWN.

PART ELEVATION
(LEFT SIDE)

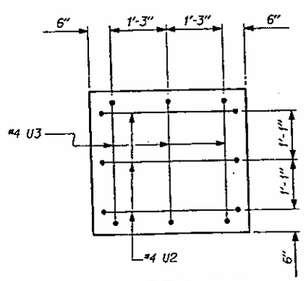

VIEW X-X

NOTES

STIRRUPS IN CAP MAY BE SHIFTED AS NECESSARY TO CLEAR ANCHOR BOLTS.

HOOKS ON "V" BARS MAY BE TURNED AS NECESSARY FOR PLACING REINFORCING STEEL

FOR SPIRAL COLUMN REINFORCING STEEL, SEE SPECIAL PROVISIONS.

FOR EPOXY PROTECTIVE COATING, SEE SPECIAL PROVISIONS.

THE TOP SURFACE AREAS OF THE BENT CAP SHALL BE CURED IN ACCORDANCE WITH THE STANDARD SPECIFICATIONS EXCEPT THAT THE MEMBRANE CURING COMPOUND METHOD SHALL NOT BE USED.

FOR PROTECTION OF SUBSTRUCTURE, SEE SPECIAL PROVISIONS.

FOR PILE SPLICE DETAIL, SEE END BENT NO.1.

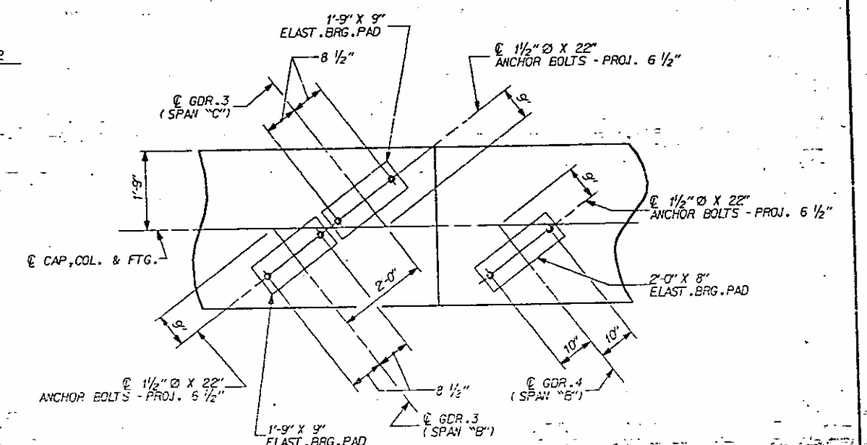

DETAIL "B"

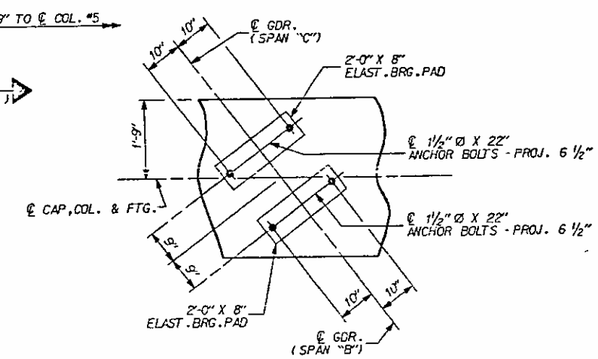

DETAIL "A"
TYP.@ ALL GIRDERS EXCEPT DETAIL "B" GIRDERS

PROJECT NO. 8.1236903
JOHNSTON COUNTY
STATION: 536+91.47 -L-

SHEET 1 OF 3

STATE OF NORTH CAROLINA
DEPARTMENT OF TRANSPORTATION
RALEIGH

SUBSTRUCTURE

BENT No.2

REVISIONS								SHEET NO.
NO.	BY:	DATE:	NO.	BY:	DATE:			~~S-73~~ 248
1			3					TOTAL SHEETS
2			4					~~167~~

DRAWN BY: MIKE BRITT DATE: 3-18-88
CHECKED BY: DON HORNE DATE: 5-12-88

CADD 1492 10 BT2.DGN

STR.#10

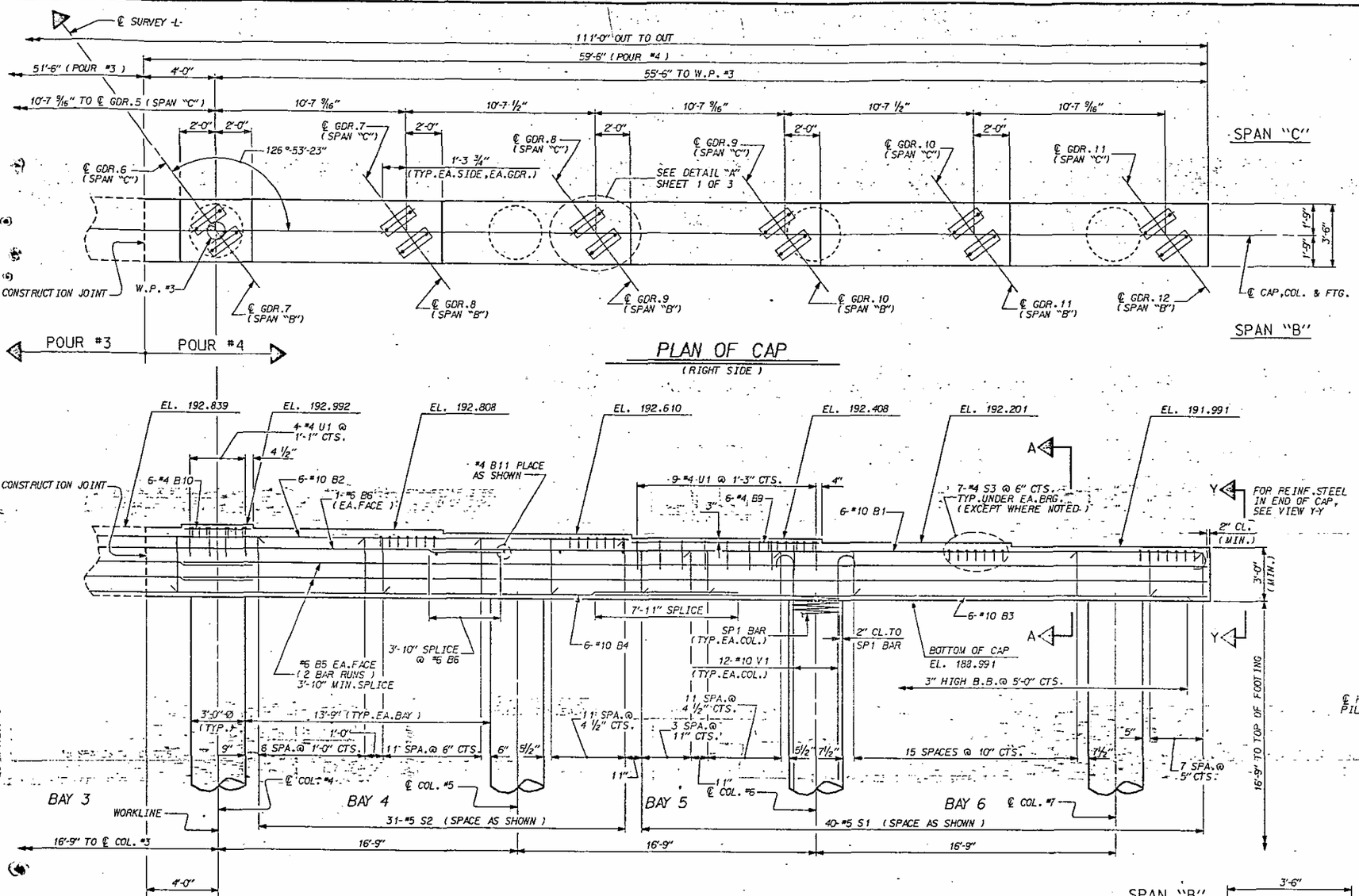

PLAN OF CAP
(RIGHT SIDE)

PART ELEVATION
(RIGHT SIDE)

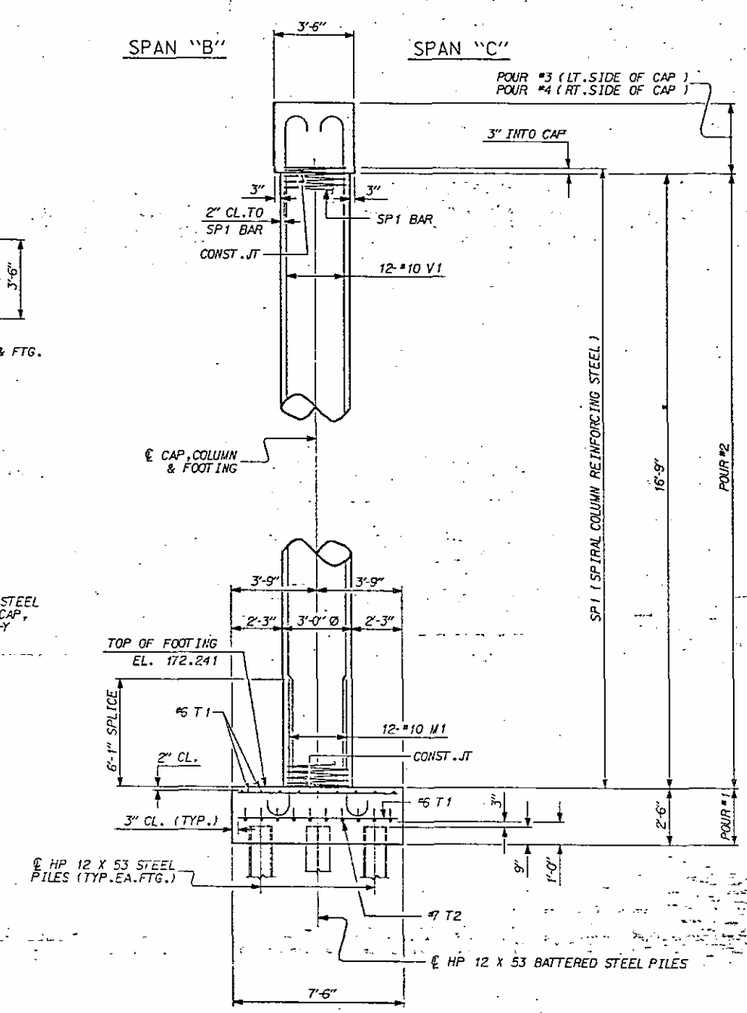

END ELEVATION

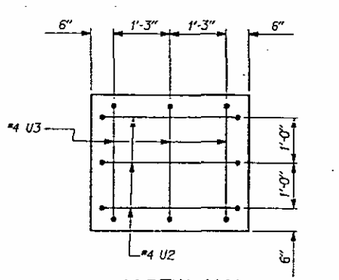

VIEW Y-Y

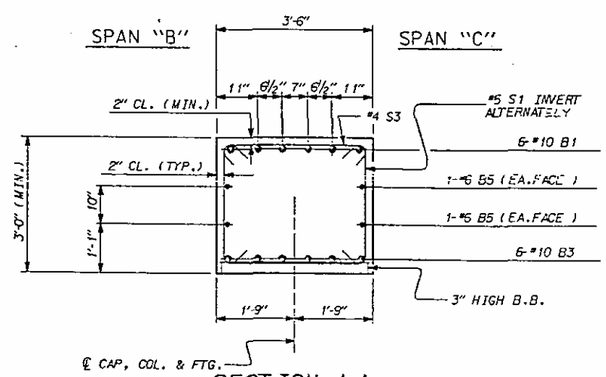

SECTION A-A

PROJECT NO. 8.1236903
JOHNSTON COUNTY
STATION: 536+91.47 -L-

SHEET 2 OF 3

STATE OF NORTH CAROLINA
DEPARTMENT OF TRANSPORTATION
RALEIGH

SUBSTRUCTURE

BENT No. 2

REVISIONS						SHEET NO.
NO.	BY:	DATE:	NO.	BY:	DATE:	S-94
1			3			TOTAL SHEETS
2			4			107

DRAWN BY : MIKE BRITT DATE : 3-18-88
CHECKED BY : Don Hodges DATE : 5-10-88
CADD 1492_10 BT2.DGN

249

STR.#10

HP 12 X 53 STEEL PILES

NO	LENGTH	NO	LENGTH	NO	LENGTH
1	39.2	18	40.0	35	39.8
2	38.9	19	40.0	36	39.8
3	38.7	20	40.0	37	39.9
4	39.3	21	40.0	38	40.0
5	38.3	22	40.0	39	39.3
6	38.7	23	40.0	40	40.0
7	38.5	24	40.0	41	39.8
8	38.8	25	40.0	42	39.8
9	38.7	26	40.0	43	38.8
10	37.9	27	40.0	44	38.8
11	37.5	28	40.0	45	39.4
12	38.4	29	40.0	46	38.6
13	37.5	30	39.7	47	39.2
14	38.9	31	40.0	48	39.2
15	39.4	32	40.0	49	38.3
16	39.4	33	40.0	50	38.7
17	38.9	34	40.0		

BAR TYPES

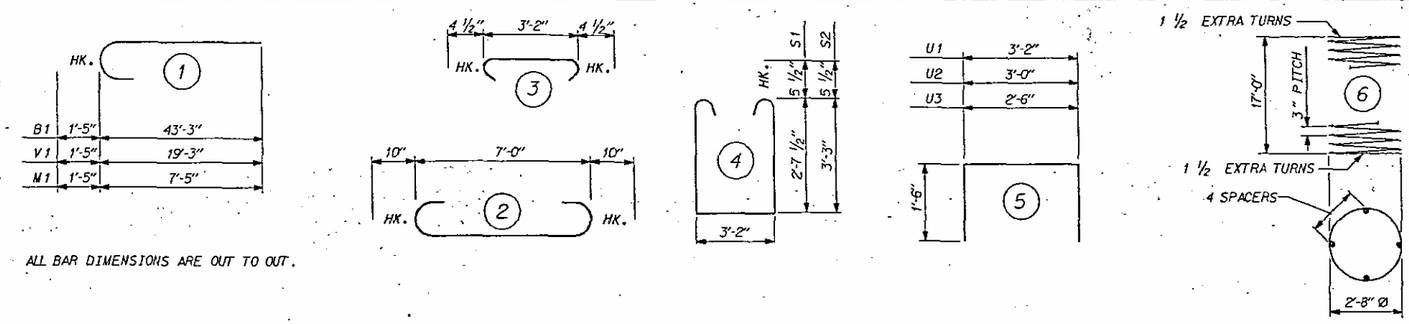

ALL BAR DIMENSIONS ARE OUT TO OUT.

BILL OF MATERIAL
BENT No.2

BAR	NO.	SIZE	TYPE	LENGTH	WEIGHT
B1	12	10	1	44' - 8"	2,306
B2	6	10	STR.	46' - 2"	1,192
B3	12	10	STR.	34' - 3"	1,769
B4	6	10	STR.	58' - 0"	1,497
B5	8	6	STR.	57' - 3"	688
B6	2	6	STR.	31' - 8"	95
B7	6	4	STR.	12' -11"	52
B8	6	4	STR.	7' -11"	32
B9	6	4	STR.	10' - 5"	42
B10	6	4	STR.	3' - 8"	15
B11	8	4	STR.	3' - 2"	17
S1	80	5	4	9' - 4"	779
S2	62	5	4	10' - 7"	684
S3	86	4	3	3' -11"	225
U1	28	4	5	6' - 2"	115
U2	6	4	5	9' - 0"	24
U3	6	4	5	5' - 6"	22
V1	84	10	1	20' - 8"	7,470
M1	84	10	1	8' -10"	3,193
T1	189	6	STR.	7' - 0"	1,987
T2	70	7	2	8' - 8"	1,240
SP1	7	-	6	585' -10"	2,739

-------- TOTAL QUANTITIES --------

REINFORCING STEEL = 23,444 LBS.

SPIRAL COLUMN
REINFORCING STEEL= 2,739 LBS.

CLASS A CONCRETE BREAKDOWN

POUR #1 (FOOTINGS)------ 36.5 CYS.
POUR #2 (COLUMNS)------ 30.7 CYS.
POUR #3 (LT. SIDE CAP)- 23.4 CYS.
POUR #4 (RT. SIDE CAP)- 26.7 CYS.

CLASS A CONCRETE TOTAL= 117.3 CYS.

HP 12 X 53 STEEL PILES
NO. 50 LIN. FT. 2,000

1/10/10 BLWoodard

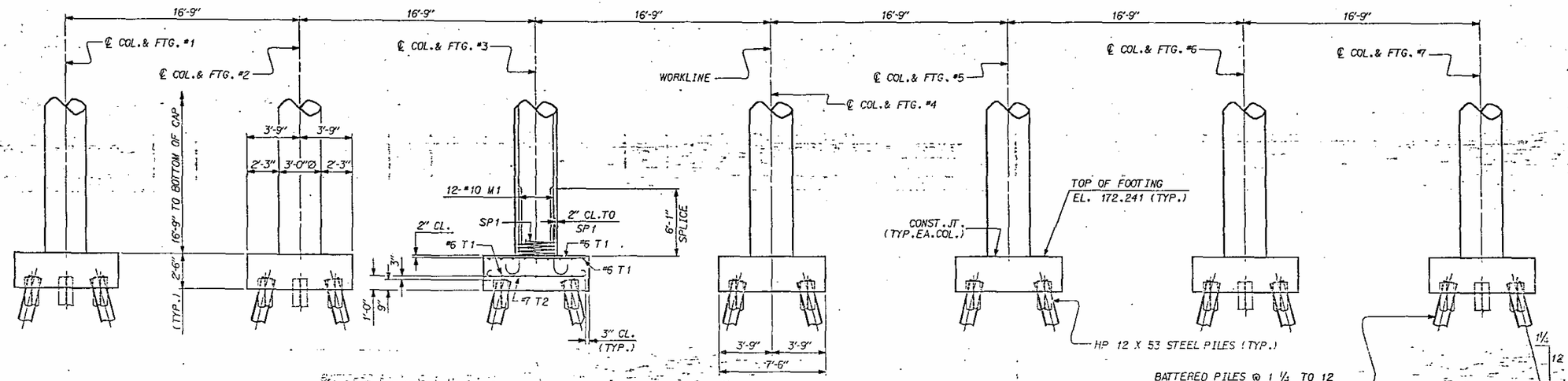

PART ELEVATION

DIMENSIONS & REINFORCING STEEL ARE TYPICAL IN EACH FOOTING & COLUMN
PILE LOCATION & LAYOUT VARIES AS SHOWN

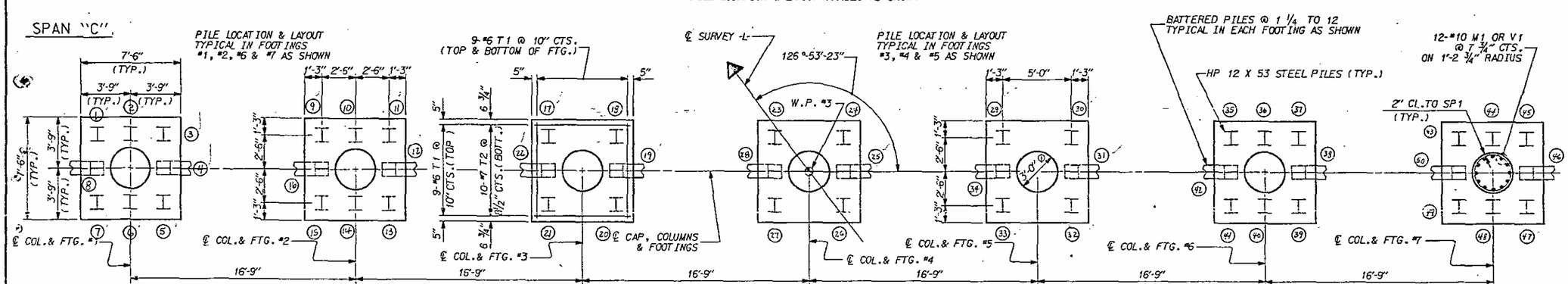

PLAN OF FOOTINGS

FOOTING DIMENSIONS & REINFORCING STEEL ARE TYPICAL IN EACH FOOTING
PILE LOCATION & LAYOUT VARIES AS SHOWN

PROJECT NO. 8.1236903
JOHNSTON COUNTY
STATION: 536+91.47 -L-

SHEET 3 OF 3

STATE OF NORTH CAROLINA
DEPARTMENT OF TRANSPORTATION
RALEIGH

SUBSTRUCTURE

BENT No.2

REVISIONS								SHEET NO.
NO.	BY:	DATE:	NO.	BY:	DATE:			250
1			3					TOTAL SHEETS
2			4					107

DRAWN BY : MIKE BRITT DATE : 3-18-88
CHECKED BY : Don Hodges DATE : 5-10-88

CADD 1492 10 BT2.DGN

STR.#10

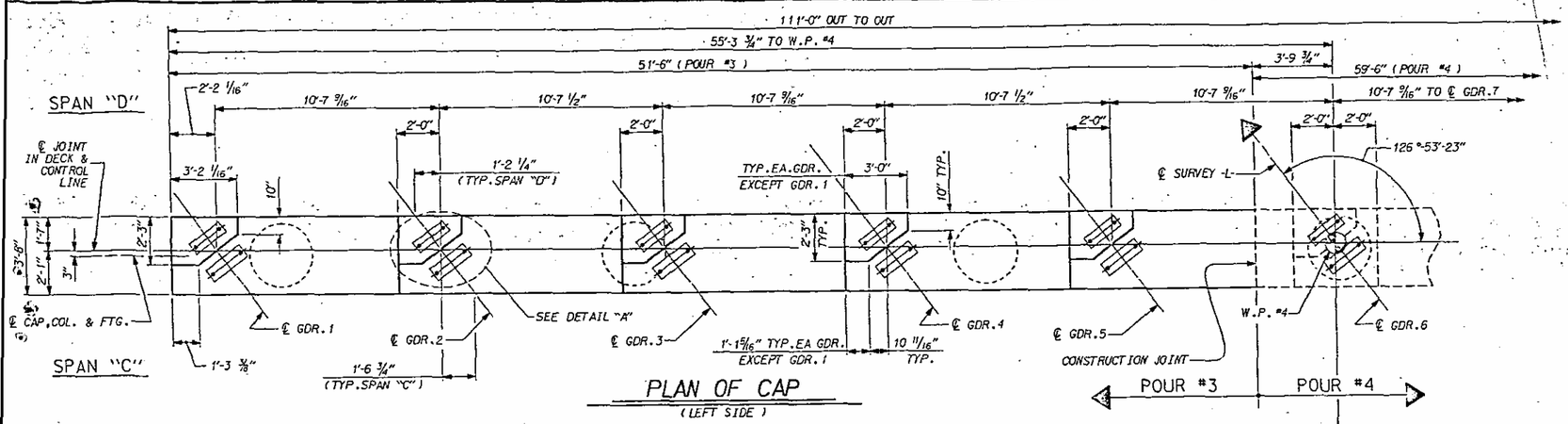

PLAN OF CAP
(LEFT SIDE)

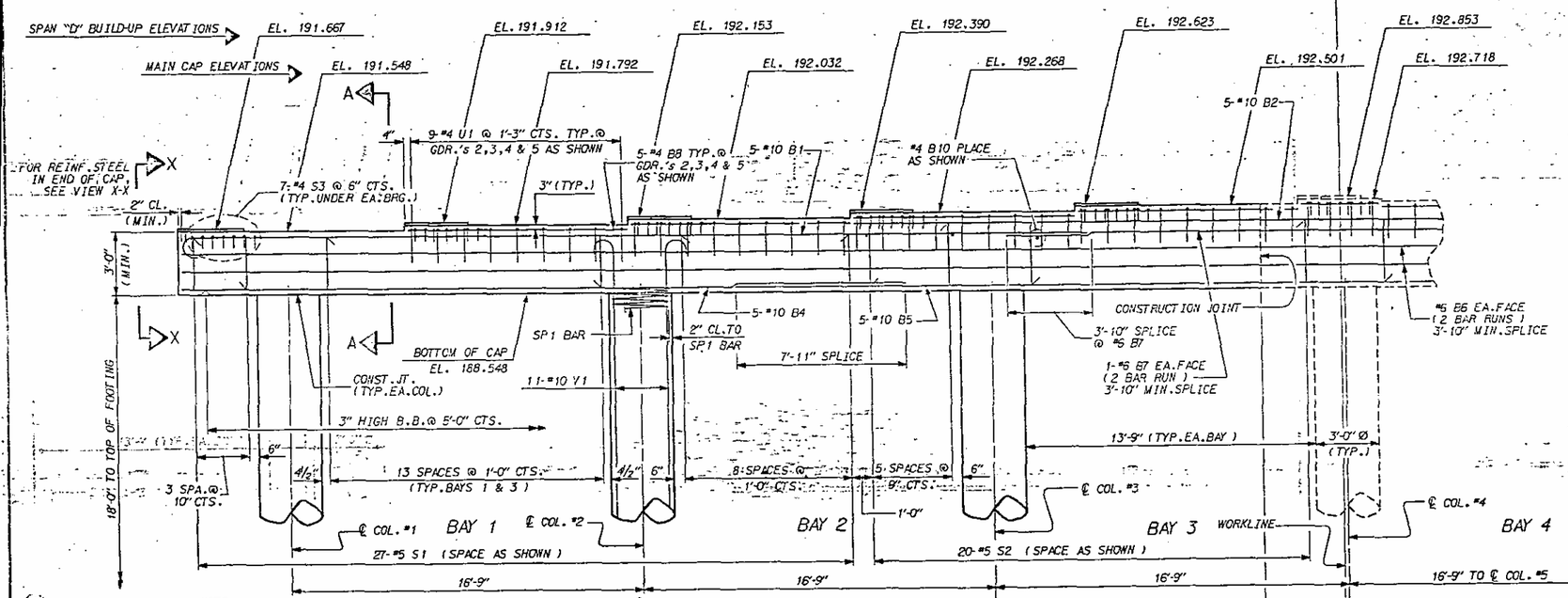

NOTE:
ALL STIRRUPS ARE TO BE INVERTED ALTERNATELY AS SHOWN.

PART ELEVATION
(LEFT SIDE)

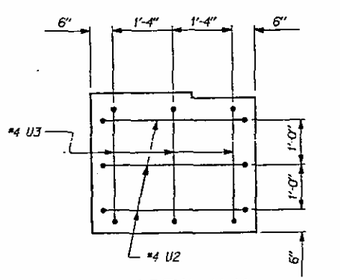

VIEW X-X

NOTES

STIRRUPS IN CAP MAY BE SHIFTED AS NECESSARY TO CLEAR ANCHOR BOLTS.

HOOKS ON "V" BARS MAY BE TURNED AS NECESSARY FOR PLACING REINFORCING STEEL

FOR SPIRAL COLUMN REINFORCING STEEL, SEE SPECIAL PROVISIONS.

FOR EPOXY PROTECTIVE COATING, SEE SPECIAL PROVISIONS.

THE TOP SURFACE AREAS OF THE BENT CAP SHALL BE CURED IN ACCORDANCE WITH THE STANDARD SPECIFICATIONS EXCEPT THAT THE MEMBRANE CURING COMPOUND METHOD SHALL NOT BE USED.

FOR PROTECTION OF SUBSTRUCTURE, SEE SPECIAL PROVISIONS.

THE CONTRACTOR'S ATTENTION IS CALLED TO THE FACT THAT THE CENTERLINE JOINT IN THE DECK SLAB (CONTROL LINE) IS OFFSET 3" FROM THE CENTERLINE BENT, AND THE WORKPOINT IS OFFSET 2 1/4" FROM THE CENTERLINE OF COLUMN #4.

FOR PILE SPLICE DETAIL, SEE END BENT NO.1.

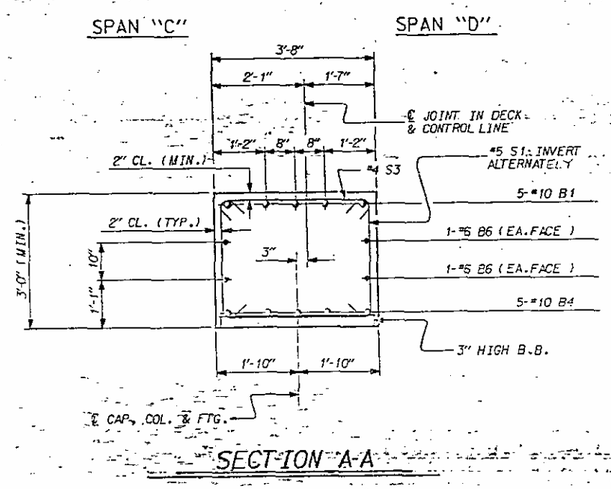

SECTION A-A

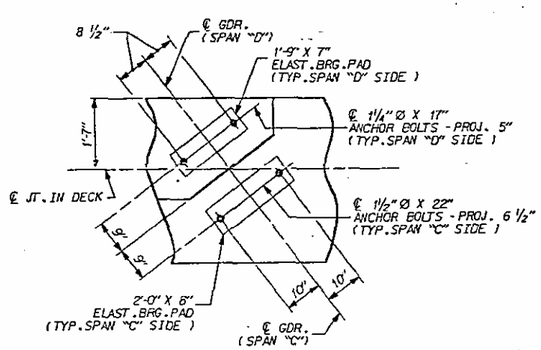

DETAIL "A"

PROJECT NO. 8.1236903
JOHNSTON COUNTY
STATION: 536+91.47 -L-

SHEET 1 OF 3

STATE OF NORTH CAROLINA
DEPARTMENT OF TRANSPORTATION
RALEIGH

SUBSTRUCTURE

BENT No.3

REVISIONS						SHEET NO.
NO.	BY:	DATE:	NO.	BY:	DATE:	S-96
1			3			TOTAL SHEETS
2			4			107

DRAWN BY: MIKE BRITT DATE: 3-15-88
CHECKED BY: Don Hodge DATE: 5-10-88

CADD 1492_10 BT3.DGN

STR.#10

251

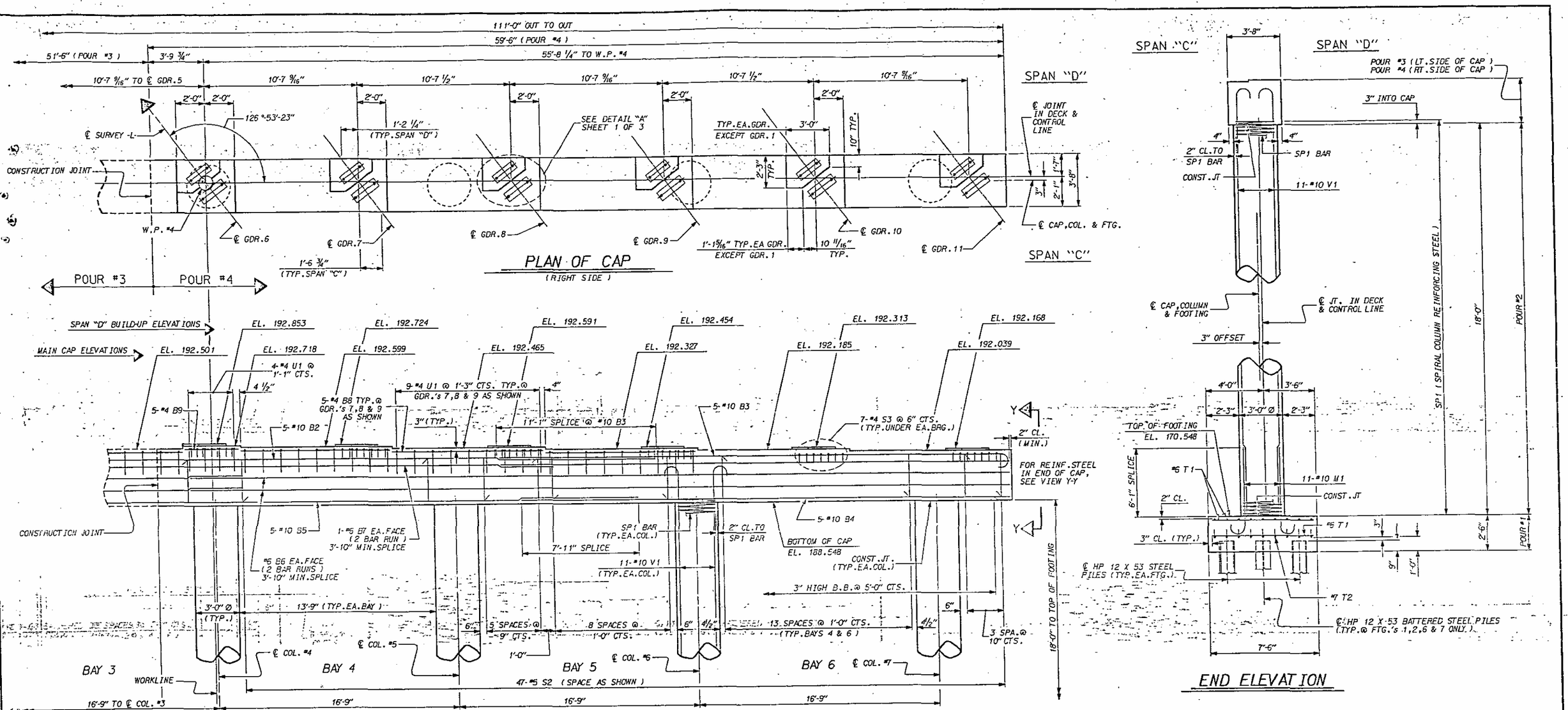

NOTE:

THE CONTRACTOR'S ATTENTION IS CALLED TO THE FACT THAT THE CENTERLINE JOINT IN THE DECK SLAB (CONTROL LINE) IS OFFSET 3" FROM THE CENTERLINE BENT, AND THE WORKPOINT IS OFFSET 2 1/4" FROM THE CENTERLINE OF COLUMN #4.

PROJECT NO. 8.1236903

JOHNSTON COUNTY

STATION: 536+91.47 -L-

SHEET 2 OF 3

STATE OF NORTH CAROLINA
DEPARTMENT OF TRANSPORTATION
RALEIGH

SUBSTRUCTURE

BENT No. 3

REVISIONS						SHEET NO.
NO.	BY:	DATE:	NO.	BY:	DATE:	S-77
1			3			TOTAL SHEETS
2			4			797

252

DRAWN BY: MIKE BRITT DATE: 3-15-88
CHECKED BY: [illegible] DATE: 5-10-93

CADD 1492 10 BT3.DGN

STR.#10

HP 12 X 53 STEEL PILES

NO	LENGTH	NO	LENGTH	NO	LENGTH
1	35.3	16	38.0	31	39.0
2	35.5	17	36.6	32	36.1
3	33.4	18	35.7	33	35.2
4	34.7	19	35.6	34	34.2
5	33.7	20	36.2	35	33.7
6	33.3	21	35.6	36	34.8
7	35.3	22	34.2	37	39.0
8	34.4	23	32.5	38	39.0
9	37.5	24	32.9	39	39.0
10	37.2	25	36.4	40	39.0
11	36.7	26	35.3	41	38.8
12	36.4	27	33.0	42	37.9
13	36.5	28	32.5	43	36.2
14	36.5	29	39.0	44	37.6
15	34.7	30	39.0		

BAR TYPES

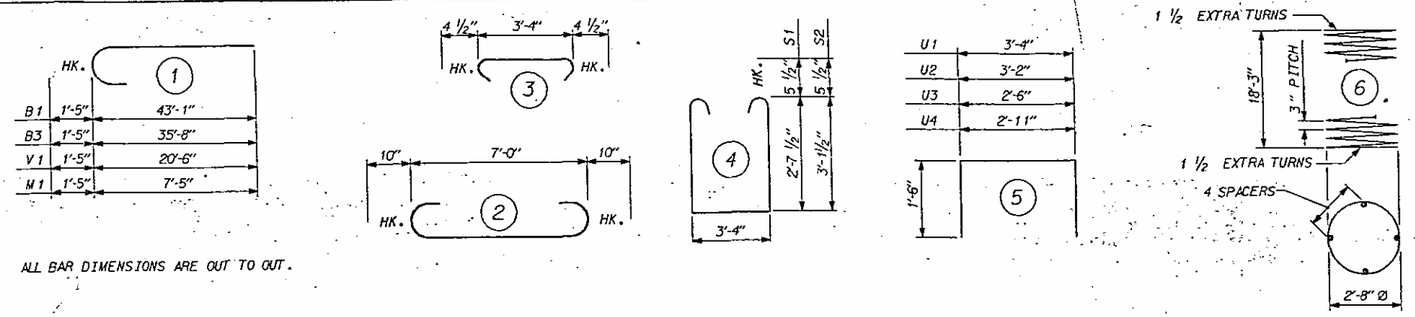

ALL BAR DIMENSIONS ARE OUT TO OUT.

BILL OF MATERIAL
BENT No.3

BAR	NO.	SIZE	TYPE	LENGTH	WEIGHT
B1	5	10	1	44' - 6"	957
B2	5	10	STR.	53' -11"	1,160
B3	5	10	1	37' - 1"	798
B4	10	10	STR.	34' - 2"	1,470
B5	5	10	STR.	58' - 2"	1,251
B6	8	6	STR.	57' - 3"	688
B7	4	6	STR.	37' - 7"	226
B8	35	4	STR.	10' - 5"	244
B9	5	4	STR.	3' - 8"	12
B10	3	4	STR.	3' - 4"	7
S1	27	5	4	9' - 6"	268
S2	67	5	4	10' - 6"	734
S3	77	4	3	4' - 1"	210
U1	67	4	5	6' - 4"	283
U2	6	4	5	6' - 2"	25
U3	3	4	5	5' - 6"	11
U4	3	4	5	5' -11"	12
V1	77	10	1	21' -11"	7,262
M1	77	10	1	8' -10"	2,927
T1	189	6	STR.	7' - 0"	1,987
T2	63	7	2	8' - 8"	1,116
SP1	VOID		6	527' - 0"	2,932

Blankenship

-------- TOTAL QUANTITIES --------

REINFORCING STEEL = 21,648 LBS.

SPIRAL COLUMN
REINFORCING STEEL= 2,932 LBS.

CLASS A CONCRETE BREAKDOWN

POUR #1 (FOOTINGS) ----- 36.5 CYS.
POUR #2 (COLUMNS) ------ 33.0 CYS.
POUR #3 (LT. SIDE CAP) - 24.4 CYS.
POUR #4 (RT. SIDE CAP) - 30.9 CYS.

CLASS A CONCRETE TOTAL= 124.8 CYS.

HP 12 X 53 STEEL PILES
NO. 44 LIN. FT. 1,760

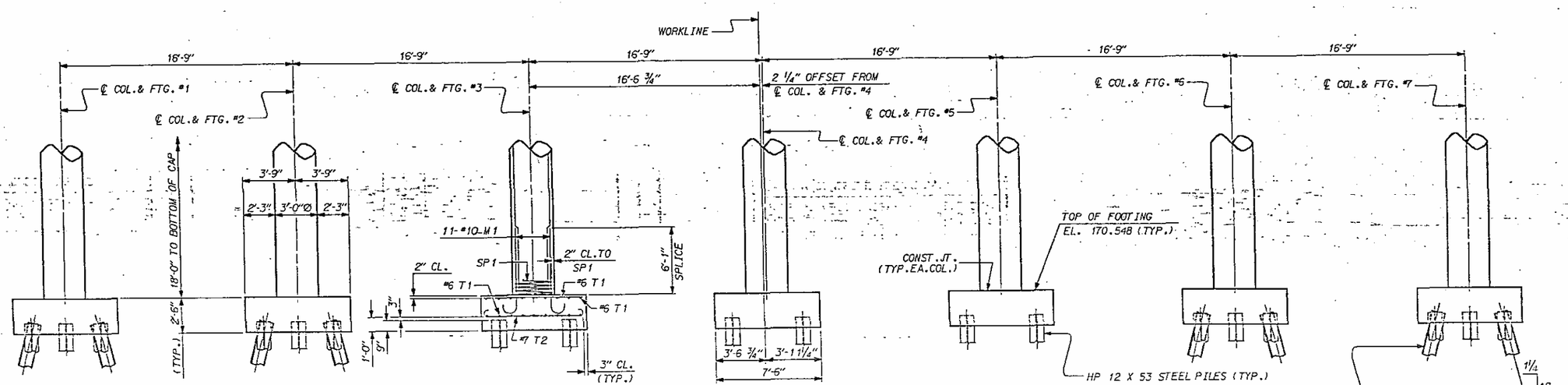

PART ELEVATION

DIMENSIONS & REINFORCING STEEL ARE TYPICAL IN EACH FOOTING & COLUMN
PILE LOCATION & LAYOUT VARIES AS SHOWN

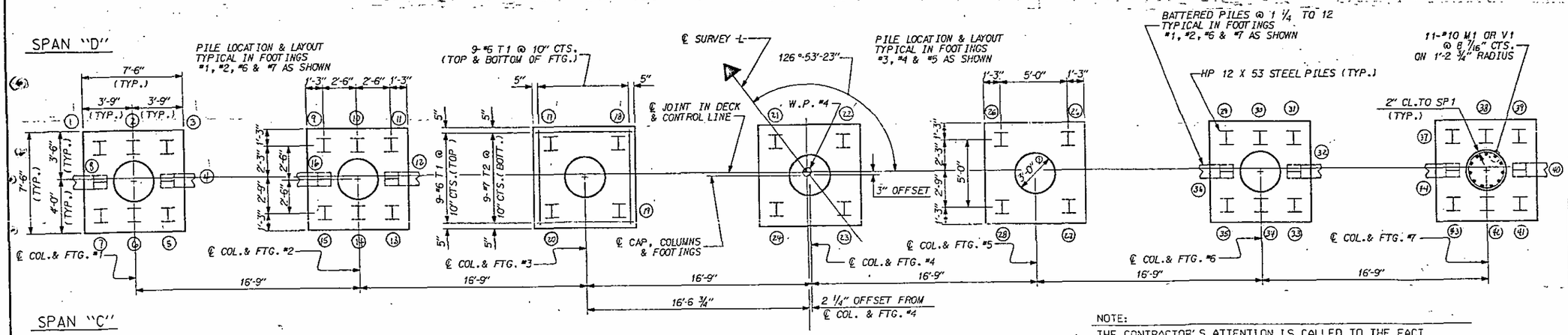

PLAN OF FOOTINGS

FOOTING DIMENSIONS & REINFORCING STEEL ARE TYPICAL IN EACH FOOTING
PILE LOCATION & LAYOUT VARIES AS SHOWN

NOTE:
THE CONTRACTOR'S ATTENTION IS CALLED TO THE FACT THAT THE CENTERLINE JOINT IN THE DECK SLAB (CONTROL LINE) IS OFFSET 3" FROM THE ℄ CAP, AND THE WORKPOINT IS OFFSET 2 1/4" FROM THE ℄ OF COLUMN #4.

PROJECT NO. 8.1236903
JOHNSTON COUNTY
STATION: 536+91.47 -L-

SHEET 3 OF 3

STATE OF NORTH CAROLINA
DEPARTMENT OF TRANSPORTATION
RALEIGH

SUBSTRUCTURE

BENT No.3

REVISIONS								SHEET NO.
NO.	BY:	DATE:	NO.	BY:	DATE:			~~5 76~~ 253
1			3					TOTAL ~~107~~
2			4					

DRAWN BY : MIKE BRITT DATE : 3-16-88
CHECKED BY : Dan Hadan DATE : 5-10-88

CADD 1492 10 BT3.DGN

STR.#10

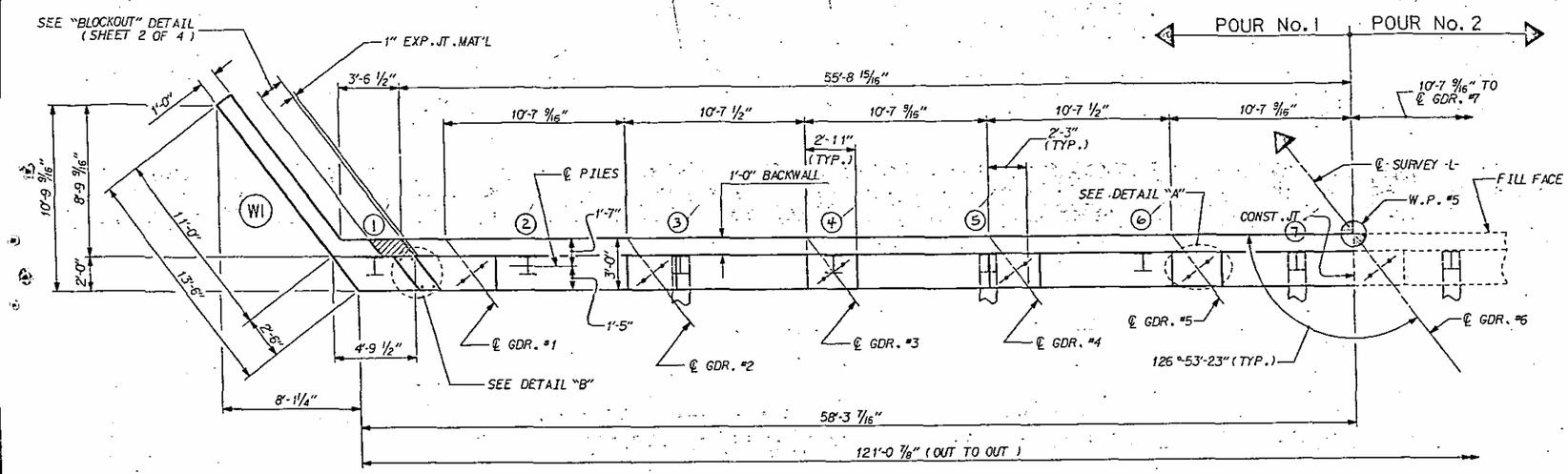

PLAN OF POUR No. 1

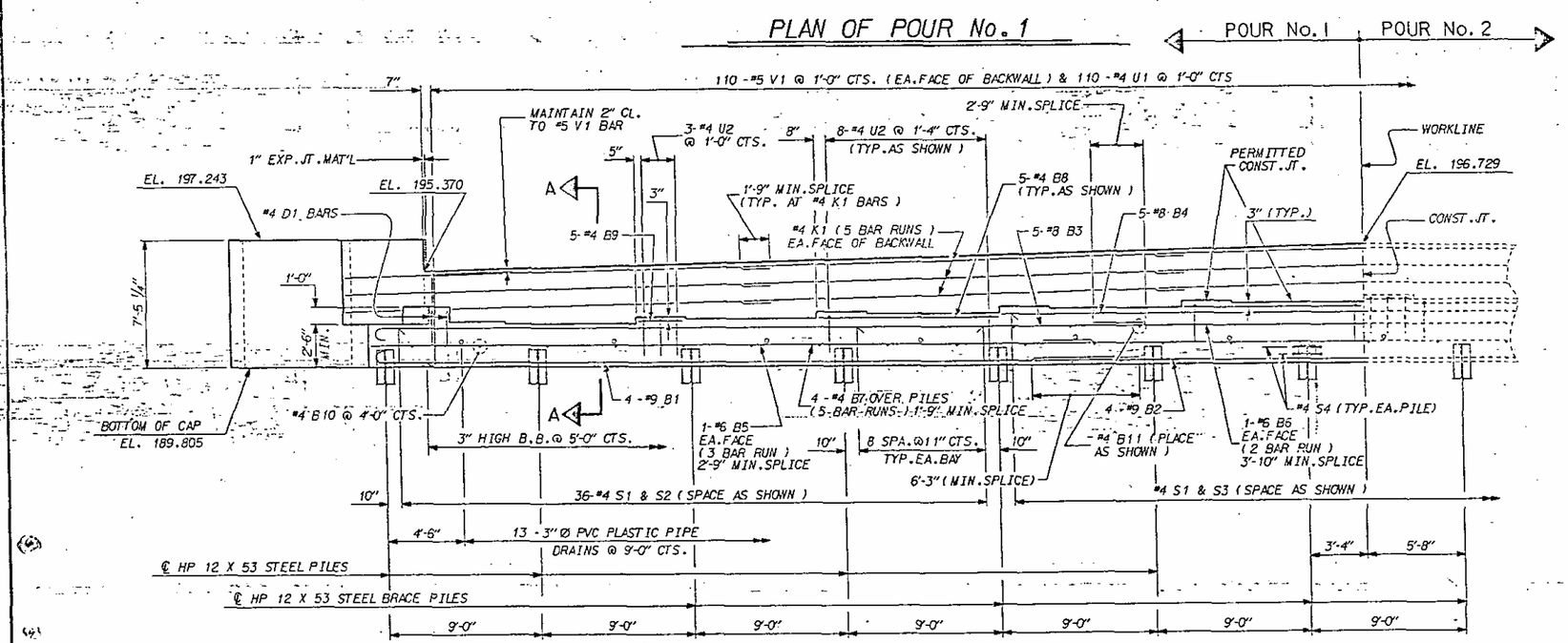

ELEVATION OF POUR No. 1

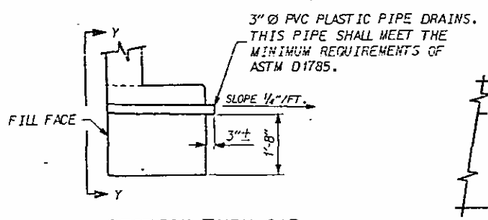

SECTION THRU CAP

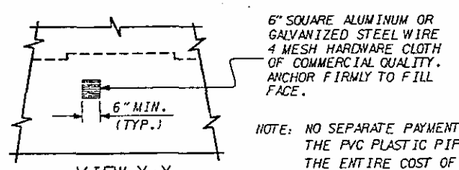

VIEW Y-Y

NOTE: NO SEPARATE PAYMENT WILL BE MADE FOR FURNISHING AND INSTALLING THE PVC PLASTIC PIPE DRAINS, HARDWARE CLOTH AND FASTENERS. THE ENTIRE COST OF THIS WORK SHALL BE INCLUDED IN THE UNIT CONTRACT PRICE BID FOR THE SEVERAL PAY ITEMS.

PIPE DRAIN DETAILS

NOTES

STIRRUPS IN CAP MAY BE SHIFTED AS NECESSARY TO CLEAR ANCHOR BOLTS.

FOR EPOXY PROTECTIVE COATING, SEE SPECIAL PROVISIONS.

PIPE DRAINS MAY BE SHIFTED SLIGHTLY AS NECESSARY TO CLEAR REINFORCING STEEL AND ANCHOR BOLTS.

THE TOP SURFACE AREAS OF THE END BENT CAP SHALL BE CURED IN ACCORDANCE WITH THE STANDARD SPECIFICATIONS EXCEPT THAT THE MEMBRANE CURING COMPOUND METHOD SHALL NOT BE USED.

FOR PROTECTION OF SUBSTRUCTURE, SEE SPECIAL PROVISIONS.

BACKWALL SHALL BE PLACED BEFORE APPLYING THE EPOXY PROTECTIVE COATING.

THE TOP SURFACE OF THE END BENT CAP EXCEPT THE BRIDGE SEAT BUILDUPS SHALL BE SLOPED TRANSVERSELY FROM THE FILL FACE TO THE BACK FACE AT THE RATE OF 1/4" PER FOOT.

THE CONCRETE IN THE SHADED AREA OF THE WING SHALL BE POURED AFTER THE JOINT IN THE DECK AND THE APPROACH SLAB HAS BEEN SAWED AND THE BARRIER RAIL IS CAST IF SLIP FORMING IS USED.

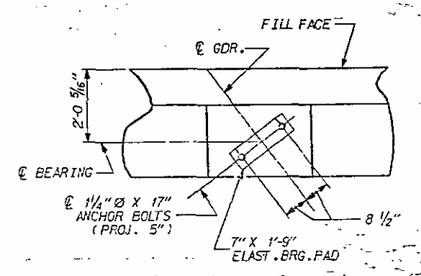

DETAIL "A"

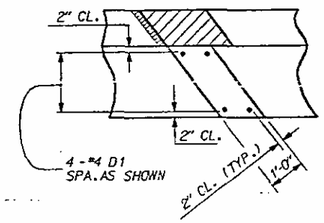

DETAIL "B"
(TYPICAL EA. SIDE)

PROJECT NO. 8.1236903
JOHNSTON COUNTY
STATION: 536+91.47 -L-

SHEET 1 OF 4

STATE OF NORTH CAROLINA
DEPARTMENT OF TRANSPORTATION
RALEIGH

SUBSTRUCTURE

END BENT No. 2

REVISIONS								SHEET NO.
NO.	BY:	DATE:	NO.	BY:	DATE:			S-99
1			3					TOTAL SHEETS
2			4					707

254

DRAWN BY: MIKE BRITT DATE: 1-13-88
CHECKED BY: Don Hodges DATE: 2-10-88

CADD 1492 10 EB2.DGN

STR. #10

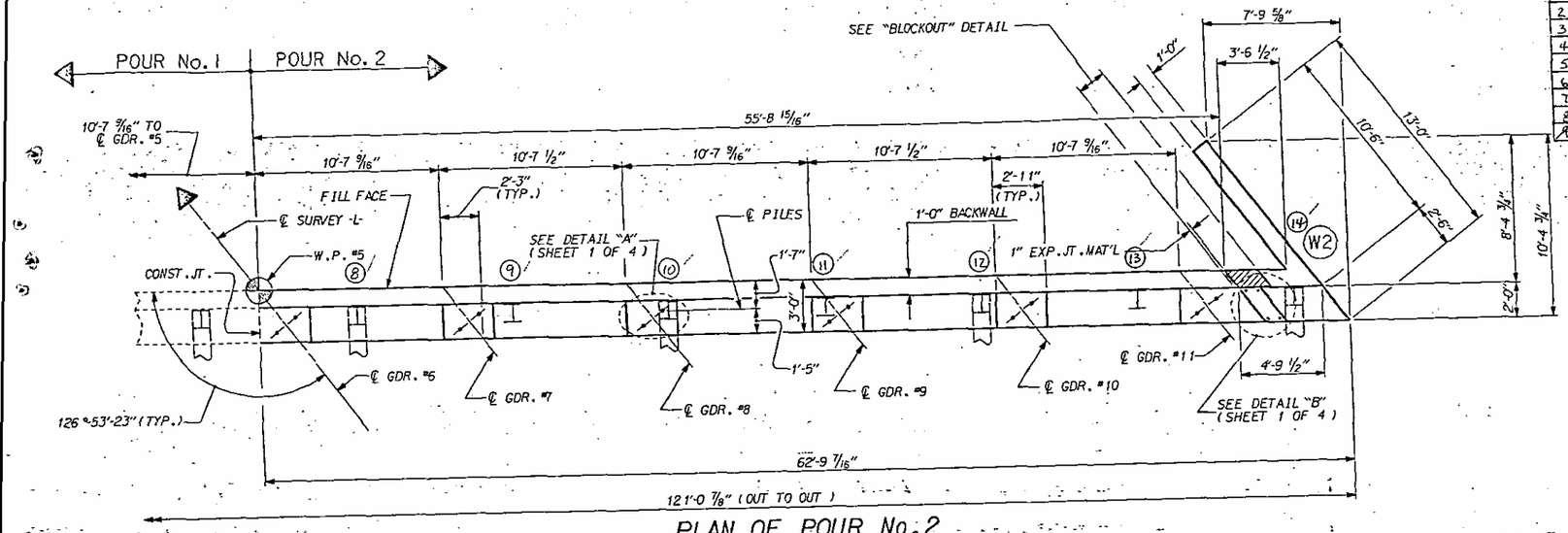

PLAN OF POUR No. 2

HP 12X53 STEEL PILES			
NO	LENGTH	NO	LENGTH
1	59.8	8	59.0
2	59.8	10	59.7
3	60.0	11	60.0
4	60.0	12	60.0
5	59.5	13	60.0
6	59.4	14	59.7
7	59.5		
8	59.0		
9	59.0		

HP 12X53 STEEL PILES			
NO	LENGTH	NO	LENGTH
1	59.8	8	59.0
2	60.0	9	59.0
3	60.0	10	59.7
4	59.5	11	60.0
5	59.4	12	60.0
6	59.4	13	60.0
7	58.5	14	59.7

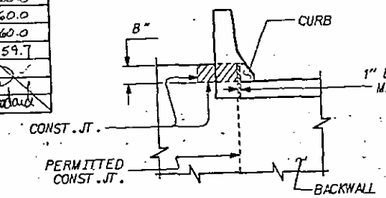

ELEVATION

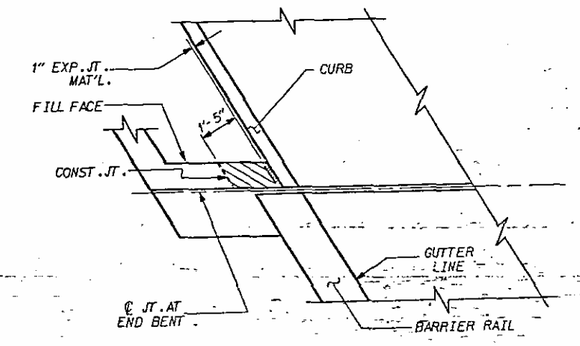

PLAN

BLOCKOUT IN WING WALL FOR FITTING COMPRESSION JOINT SEAL

NOTE: THE CONCRETE IN THE CROSS-HATCHED AREA OF THE WING SHALL BE POURED AFTER THE JOINT BETWEEN THE DECK AND APPROACH SLAB HAS BEEN SAWED AND THE BARRIER RAIL IS CAST IF SLIP FORMING IS USED.

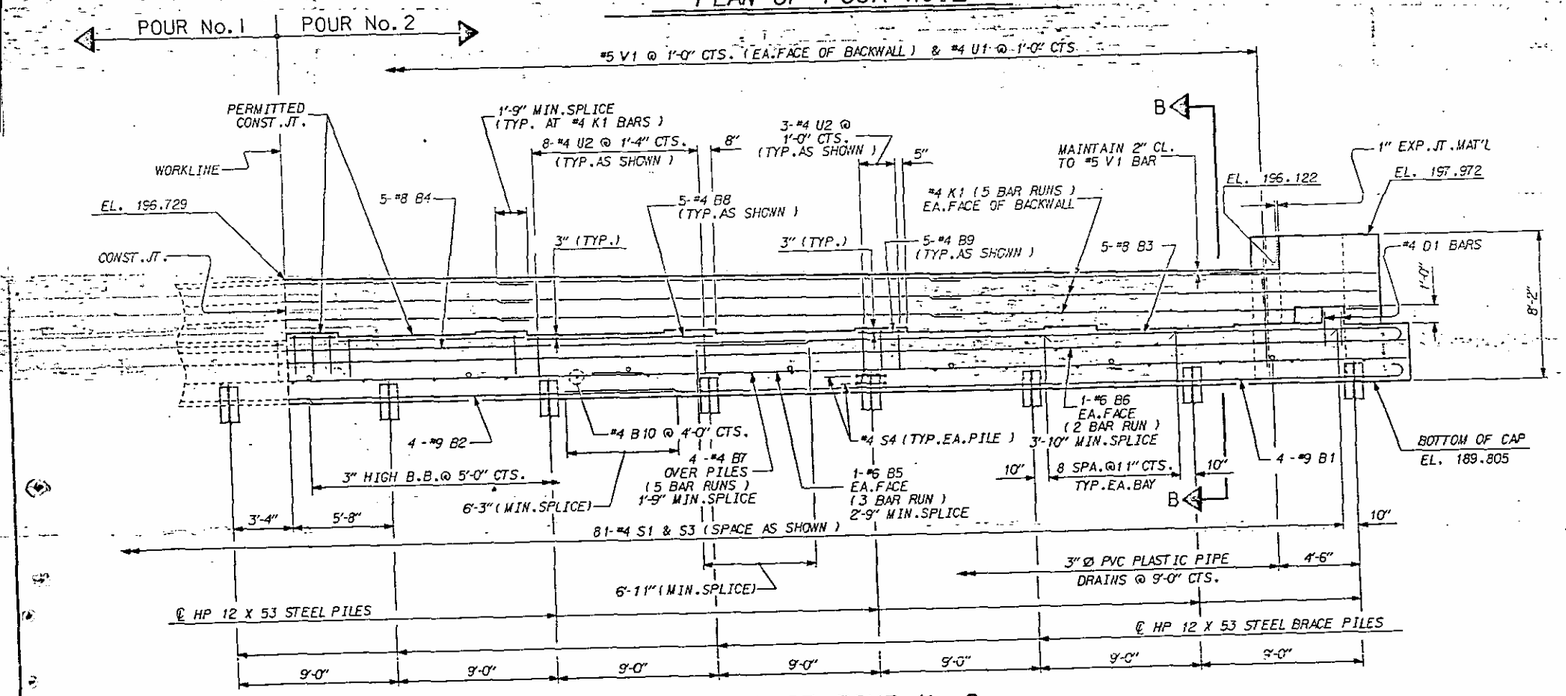

ELEVATION OF POUR No. 2

PROJECT NO. 8.1236903
JOHNSTON COUNTY
STATION: 536+91.47 -L-

SHEET 2 OF 4

STATE OF NORTH CAROLINA
DEPARTMENT OF TRANSPORTATION
RALEIGH

SUBSTRUCTURE

END BENT No. 2

REVISIONS									
NO.	BY:	DATE:	NO.	BY:	DATE:	NO.	BY:	DATE:	
1			3						
2			4						

SHEET NO. ~~S-100~~ 255
TOTAL SHEETS ~~197~~

DRAWN BY: MIKE BRITT DATE: 1-14-88
CHECKED BY: Don Hodges DATE: 2-10-88

CADD 1492 10 EB2.DGN

STR. #10

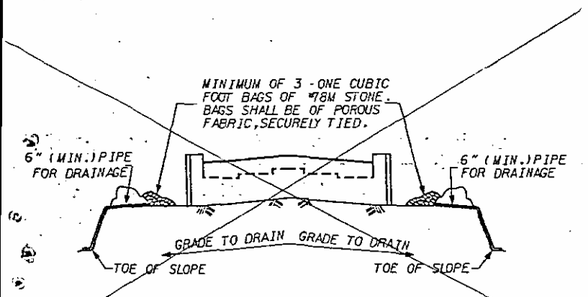

BAGGED STONE AND PIPE SHALL BE PLACED IMMEDIATELY AFTER COMPLETION OF END BENT EXCAVATION. PIPE MAY BE EITHER CONCRETE, CORRUGATED STEEL, CORRUGATED ALUMINUM ALLOY, OR CORRUGATED PLASTIC. PERFORATED PIPE WILL NOT BE ALLOWED.

BAGGED STONE SHALL REMAIN IN PLACE UNTIL THE ENGINEER DIRECTS THAT IT BE REMOVED. THE CONTRACTOR SHALL REMOVE AND DISPOSE OF SILT ACCUMULATIONS AT BAGGED STONE WHEN SO DIRECTED BY THE ENGINEER. BAGS SHALL BE REMOVED AND REPLACED WHENEVER THE ENGINEER DETERMINES THAT THEY HAVE DETERIORATED AND LOST THEIR EFFECTIVENESS.

NO SEPARATE PAYMENT WILL BE MADE FOR THIS WORK AND THE ENTIRE COST OF THIS WORK SHALL BE INCLUDED IN THE UNIT CONTRACT PRICE BID FOR THE SEVERAL PAY ITEMS.

TEMPORARY DRAINAGE AT END BENT

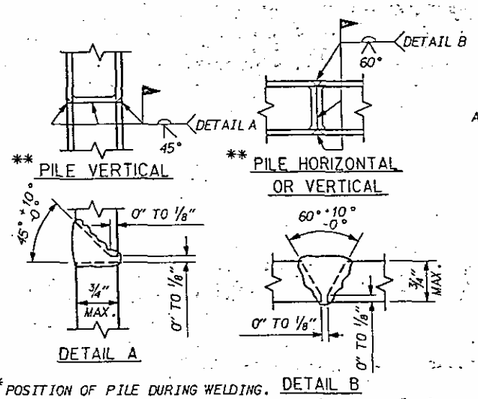

** POSITION OF PILE DURING WELDING.

PILE SPLICE DETAILS

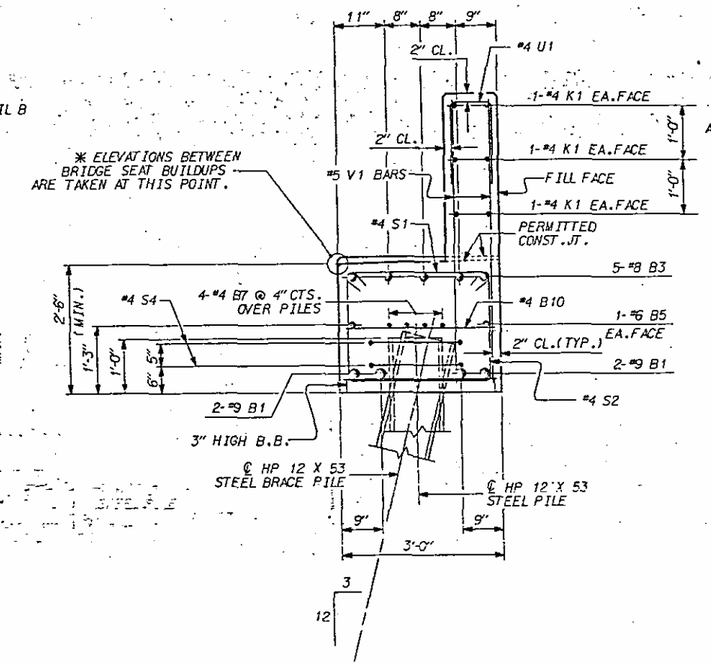

SECTION A-A

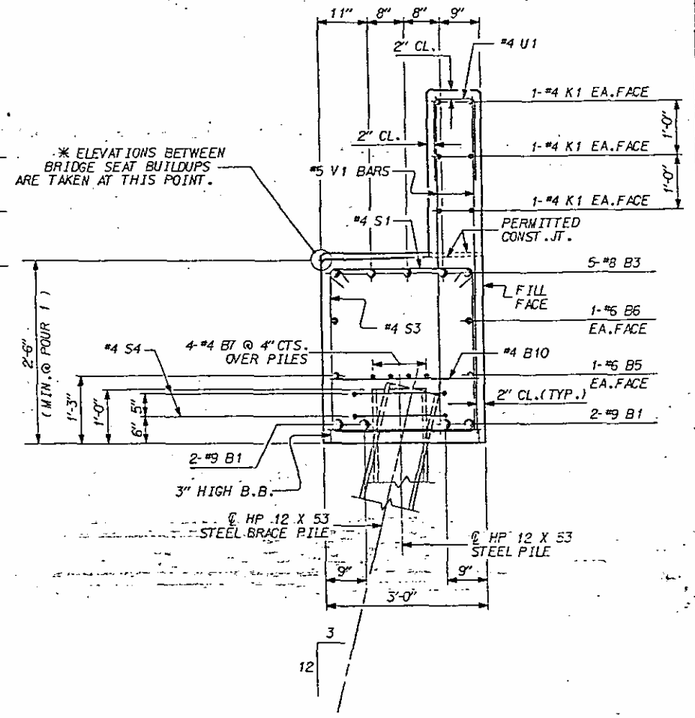

SECTION B-B

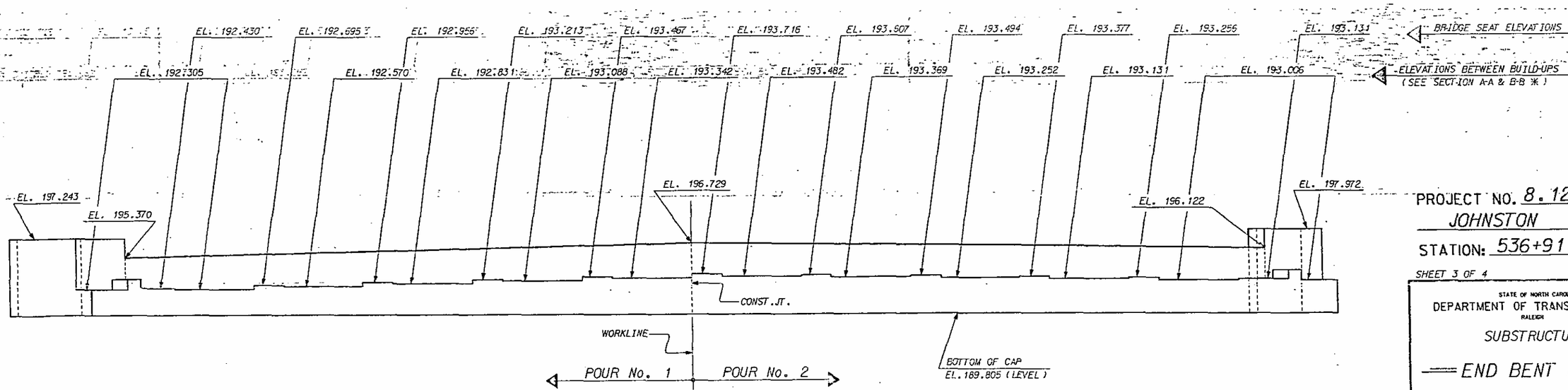

CAP ELEVATIONS DETAIL

PROJECT NO. 8.1236903
JOHNSTON COUNTY
STATION: 536+91.47 -L-

SHEET 3 OF 4

STATE OF NORTH CAROLINA
DEPARTMENT OF TRANSPORTATION
RALEIGH

SUBSTRUCTURE

END BENT No. 2

REVISIONS						SHEET NO.
NO.	BY:	DATE:	NO.	BY:	DATE:	S-101
1			3			TOTAL SHEETS
2			4			107

256

DRAWN BY : MIKE BRITT DATE : 1-15-88
CHECKED BY : Don Hodges DATE : 5-10-88

CADD 1492 10 EB2.DGN

STR.#10

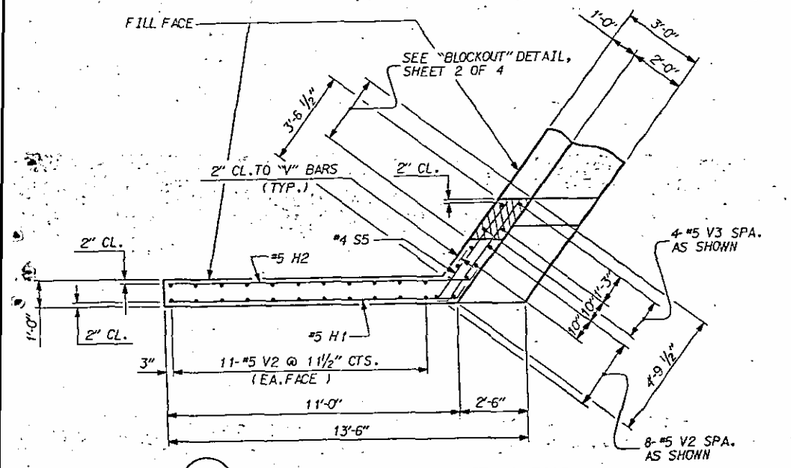

W1 PLAN OF LEFT WING
(POUR No. 1)

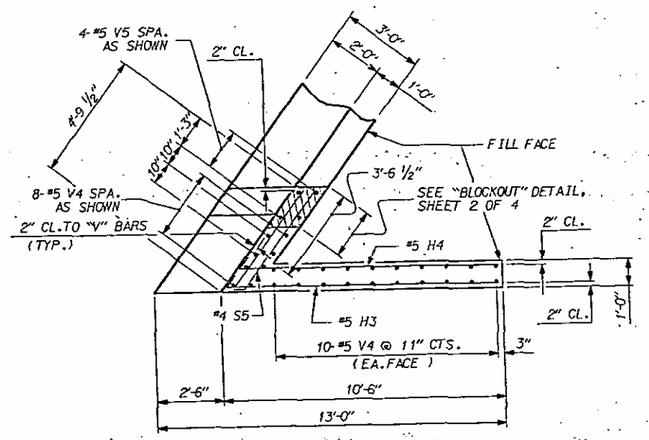

W2 PLAN OF RIGHT WING
(POUR No. 2)

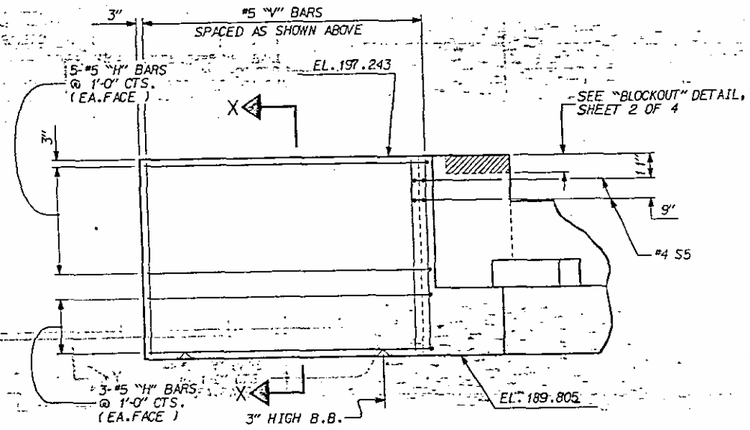

W1 ELEVATION OF LEFT WING
(POUR No. 1)

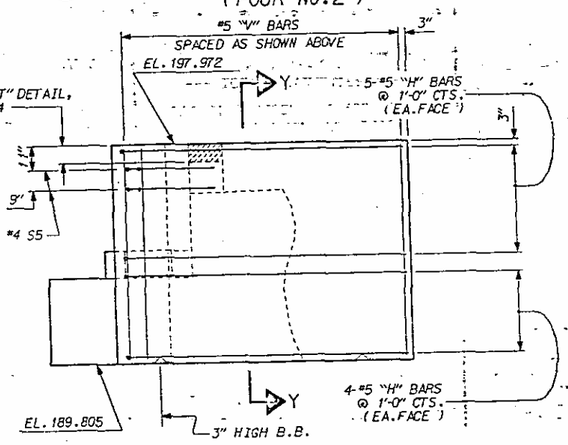

W2 ELEVATION OF RIGHT WING
(POUR No. 2)

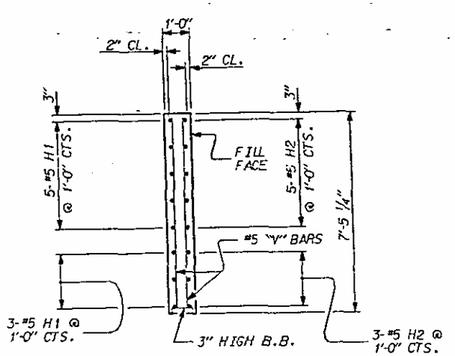

SECTION X-X

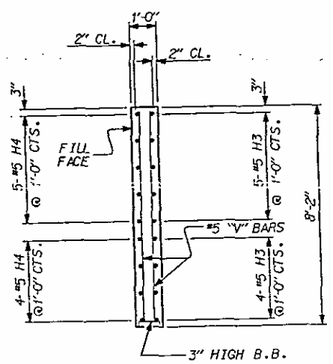

SECTION Y-Y

BAR TYPES

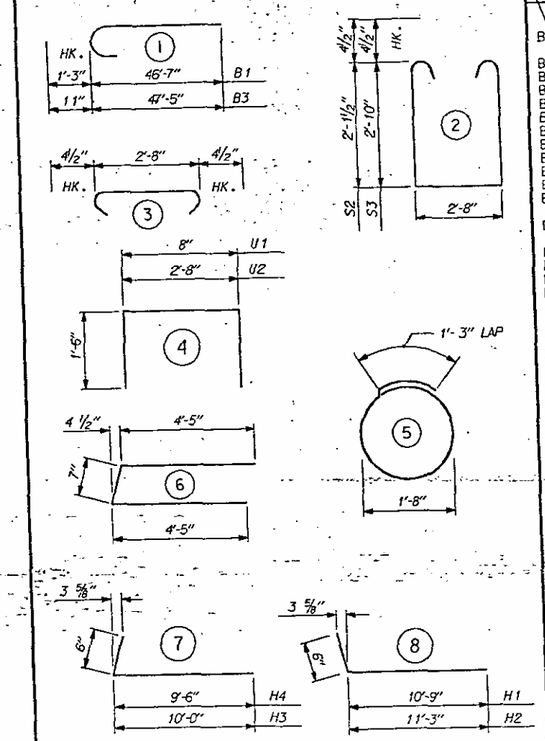

ALL BAR DIMENSIONS ARE OUT TO OUT.

BILL OF MATERIAL
END BENT No. 2

BAR	NO.	SIZE	TYPE	LENGTH	WEIGHT
B1	8	9	1	47'-10"	1,301
B2	4	9	STR.	39'-11"	643
B3	10	8	1	48'-4"	1,290
B4	5	8	STR.	43'-2"	576
B5	6	6	STR.	42'-1"	379
B6	4	6	STR.	39'-11"	240
B7	20	4	STR.	25'-7"	342
B8	20	4	STR.	10'-3"	137
B9	15	4	STR.	2'-7"	26
B10	30	4	STR.	2'-8"	53
B11	3	4	STR.	2'-8"	5
D1	8	4	STR.	2'-0"	11
H1	8	5	8	11'-3"	94
H2	8	5	8	11'-9"	98
H3	9	5	7	10'-6"	99
H4	9	5	7	10'-0"	94
K1	30	4	STR.	25'-7"	513
S1	117	4	3	3'-5"	267
S2	36	4	2	7'-8"	184
S3	81	4	2	9'-1"	491
S4	28	4	5	6'-6"	122
S5	4	4	6	9'-5"	25
U1	110	4	4	3'-8"	269
U2	41	4	4	5'-8"	155
V1	220	5	STR.	5'-3"	1,205
V2	30	5	STR.	7'-1"	222
V3	4	5	STR.	8'-5"	27
V4	28	5	STR.	7'-10"	229
V5	4	5	STR.	7'-2"	30

VOID

--- TOTAL QUANTITIES ---

REINFORCING STEEL = 9,027 LBS.

CLASS A CONCRETE BREAKDOWN

POUR #1 (LEFT SIDE) = 30.2 CU. YDS.
POUR #2 (RIGHT SIDE) = 34.4 CU. YDS.
TOTAL 64.6 CU. YDS.

HP 12 X 53 STEEL PILES
NO. 14 LIN. FT. 840

PROJECT NO. 8.1236903
JOHNSTON COUNTY
STATION: 536+91.47 -L-

SHEET 4 OF 4

STATE OF NORTH CAROLINA
DEPARTMENT OF TRANSPORTATION
RALEIGH

SUBSTRUCTURE

END BENT No. 2

REVISIONS								SHEET NO.
NO.	BY:	DATE:	NO.	BY:	DATE:			~~S-102~~ 257
1			3					TOTAL SHEETS ~~107~~
2			4					

DRAWN BY: MIKE BRITT DATE: 1-19-88
CHECKED BY: Don Lindse DATE: 4-10-89

CADD 1492 10 EB2.DGN

STR.#10

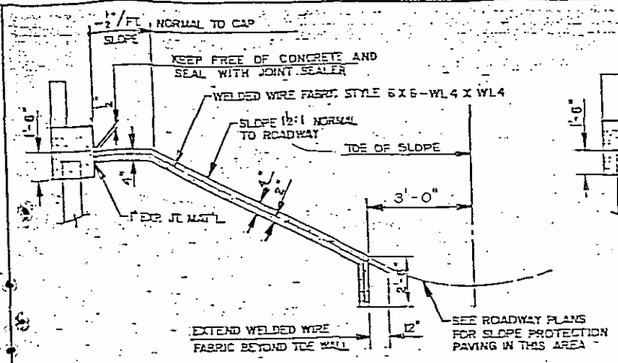

SECTION WHEN FILL CATCHES IN DITCH

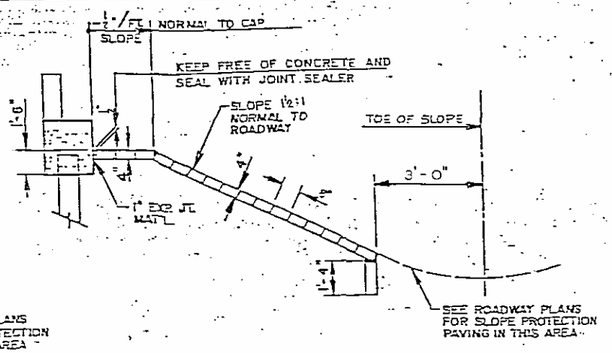

SECTION WHEN FILL CATCHES IN DITCH

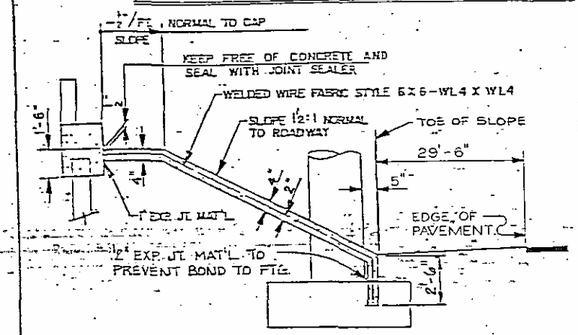

SECTION ALONG ℄ ROADWAY AT BRIDGE PIER

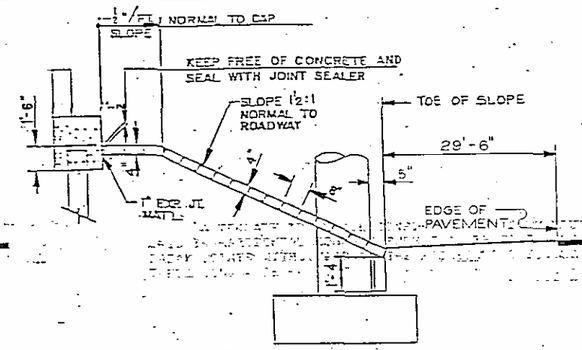

SECTION ALONG ℄ ROADWAY AT BRIDGE PIER

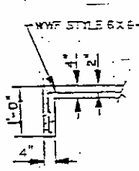

SECTION A-A

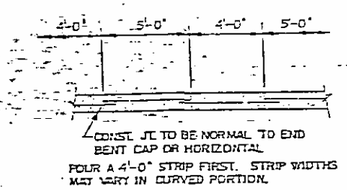

POURING DETAIL

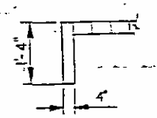

SECTION A-A

DETAILS FOR ALTERNATE "A"

DETAILS FOR ALTERNATE "B"

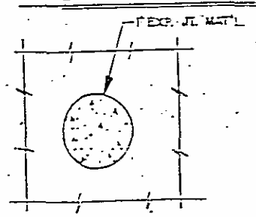

PLAN WHERE CONCRETE OR CONCRETE BLOCK SLOPE PROTECTION MUST BE PLACED AROUND A BENT COLUMN

GENERAL NOTES

4 INCH SLOPE PROTECTION SHALL BE PLACED UNDER THE ENDS OF THE BRIDGE. LIMITS OF THE PROTECTION SHALL BE AS SHOWN IN THE DETAILS. THE CONTRACTOR, AT HIS OPTION, MAY PLACE EITHER TYPE, ALTERNATES "A" OR "B", AS DESCRIBED BELOW. STRAIGHT EDGING WILL NOT BE REQUIRED UNLESS, IN THE OPINION OF THE ENGINEER, VISUAL INSPECTION INDICATES A NEED FOR IT. METHOD OF MEASURMENT AND BASIS FOR PAYMENT SHALL BE AS PRESCRIBED IN SECTION 870 OF THE STANDARD SPECIFICATIONS. THE SAME TYPE OF SLOPE PROTECTION SHALL BE USED UNDER BOTH ENDS OF ANY ONE BRIDGE. FOR BERM WIDTH, SEE GENERAL DRAWING.

ALTERNATE "A"

ALTERNATE "A" SHALL CONSIST OF FOUR INCH POURED-IN-PLACE CONCRETE PAVING AS SHOWN IN THE DETAILS ON THIS SHEET. CONCRETE SHALL BE CLASS B. THE CONCRETE SURFACE SHALL BE FLOATED WITH A WOODEN FLOAT AND FINISHED. ALTERNATE "A" WELDED WIRE FABRIC REINFORCING SHALL BE STYLE 6 X 6 - W1.4 X W1.4, 60 INCHES WIDE. ADJACENT RUNS OF WELDED WIRE FABRIC SHALL LAP AT LEAST SIX INCHES. SLOPE PROTECTION SHALL BE POURED IN ALTERNATE FOUR FT. AND FIVE FT. STRIPS AS SHOWN IN THE POURING DETAIL. THE COST OF THE WELDED WIRE FABRIC SHALL BE INCLUDED IN THE CONTRACT UNIT BID PRICE PER SQUARE YARD FOR 4 INCH SLOPE PROTECTION.

ALTERNATE "B"

ALTERNATE "B" SHALL CONSIST OF SOLID CONCRETE BLOCKS 4"X 8"X 16" LAID IN HORIZONTAL COURSES SUCH THAT THOSE IN SUCCESSIVE COURSES WILL BREAK JOINTS WITH UNITS IN THE PRECEDING ONE. BLOCKS SHALL BE LAID WITH THEIR LONG AXIS PARALLEL TO THE END BENT CAP WITH GROUTED JOINTS PREFERABLY 3/4" BUT NOT LESS THAN 1/2" NOR MORE THAN 1 1/4" WIDE BETWEEN SUCCESSIVE COURSES AND ENDS OF BLOCKS. JOINTS SHALL BE GROUTED BY POURING A MIXTURE OF ONE PART PORTLAND CEMENT TO THREE PARTS SAND MIXED WITH SUFFICIENT WATER TO ENABLE THE MIXTURE TO BE POURED THROUGH A SPOUT. THE CONCRETE BLOCKS SHALL BE CAST TO ACCURATE DIMENSIONS, SHALL HAVE UNIFORM SURFACE COLOR AND TEXTURE AND SHALL BE MANUFACTURED OF MATERIALS TO PRODUCE A COMPRESSIVE STRENGTH OF NOT LESS THAN 3,000 PSI AT AGE OF 28 DAYS. NO BROKEN BLOCKS SHALL BE USED EXCEPT IN CONSTRUCTING A STRAIGHT LINE ALONG EACH SIDE OF THE PAVING DOWN THE SLOPE. CARE SHALL BE TAKEN TO BREAK THE BLOCKS SO AS TO GIVE A UNIFORM WORKMANLIKE JOINT AND SURFACE.

	4 INCH SLOPE PROTECTION SQUARE YARDS		WELDED WIRE FABRIC, 60" WIDE APPROX. L.F.
	END BENT 1	END BENT 2	
~~BRIDGE NO. STA.~~			
536+91.47 -L-	780	805	3,170

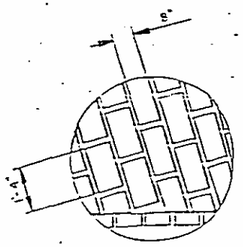

DETAIL "A" FOR ALTERNATE "B"

PROJECT NO. 8.1236903

JOHNSTON COUNTY

STATION: 536+91.47-L-

SHEET 1 OF 2

STATE OF NORTH CAROLINA
DEPARTMENT OF TRANSPORTATION
RALEIGH

STANDARD SLOPE PROTECTION DETAILS

FEBRUARY 1979

REVISIONS								SHEET NO. ~~STD. 870.03~~ 258
NO.	BY	DATE	NO.	BY	DATE			TOTAL SHEETS ~~407~~
1			3					
2			4					

STD. NO. 871

ACCEPTED BY D. A. GLADDEN DATE 2-19-79 — SPECIAL
CHECKED BY Don Hodges DATE 2-19-79
ENGINEER OF C.O. MITCHELL DATE 2-19-79 — STANDARD
ENGINEER OF Samuel A. Gibson DATE 2-19-79

REVISED 3-28-82 BY E.A.L. / REVISED 3-31-81 BY D.D.H. / REVISED 6-08-82 BY E.A.L. / REVISED 3/8/82 BY E.A.L. / REVISED AND ADOPTED APRIL 1979 BY R.D.H. / REVISED 3-28-82 BY E.A.L. / REVISED 3-31-81 BY D.D.H. / REVISED 6-08-82 BY E.A.L. / BY R.G.F.

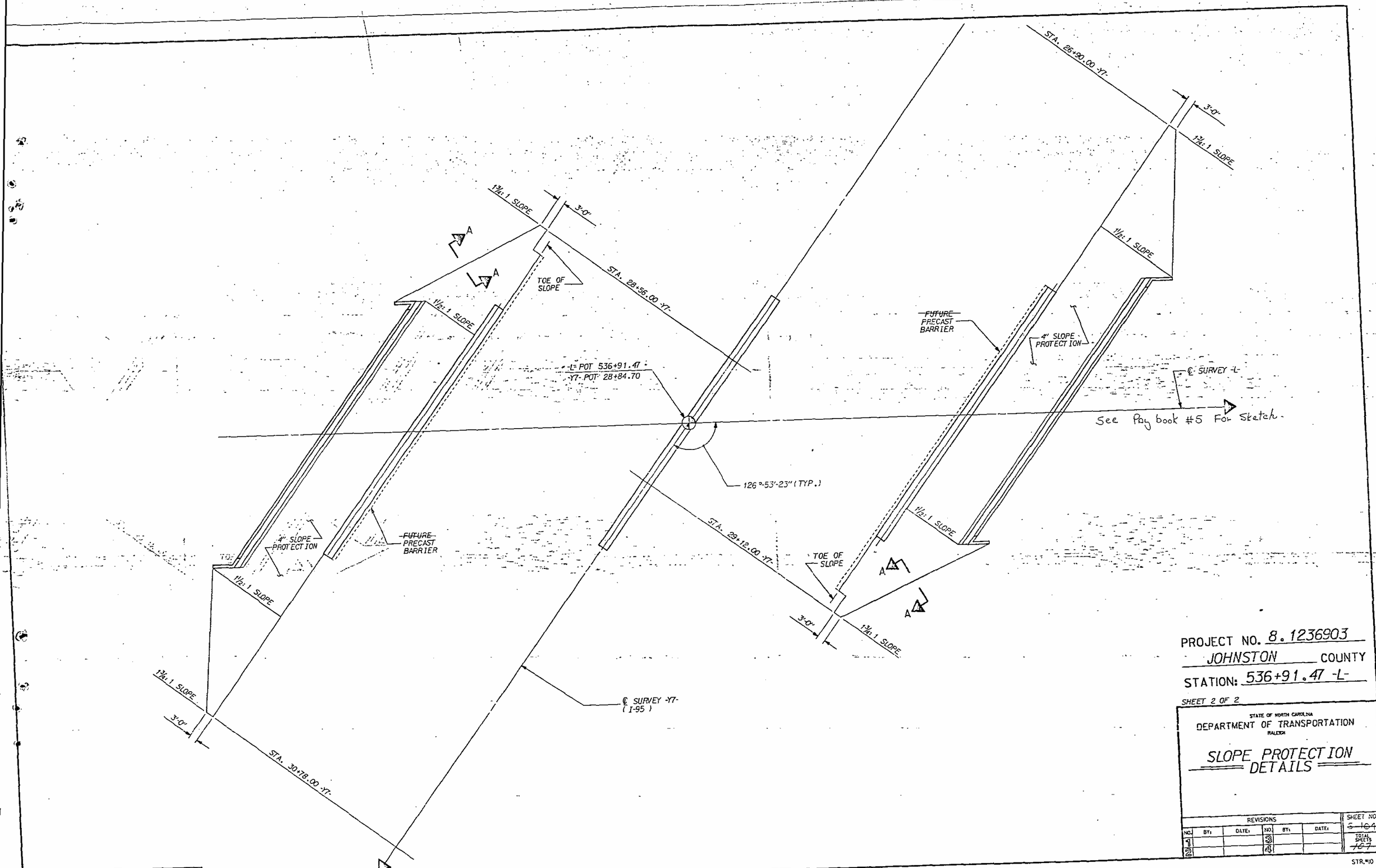

PROJECT NO. 8.1236903
JOHNSTON COUNTY
STATION: 536+91.47 -L-

SHEET 2 OF 2

STATE OF NORTH CAROLINA
DEPARTMENT OF TRANSPORTATION
RALEIGH

SLOPE PROTECTION DETAILS

REVISIONS								SHEET NO.
NO.	BY:	DATE:	NO.	BY:	DATE:			S-104
1			3					TOTAL SHEETS
2			4					167

259

STR.#10

DRAWN BY : MIKE BRITT DATE : 2-5-88
CHECKED BY : Don Hardee DATE : 2-11-88

CADD 1492 10 SLP.DGN

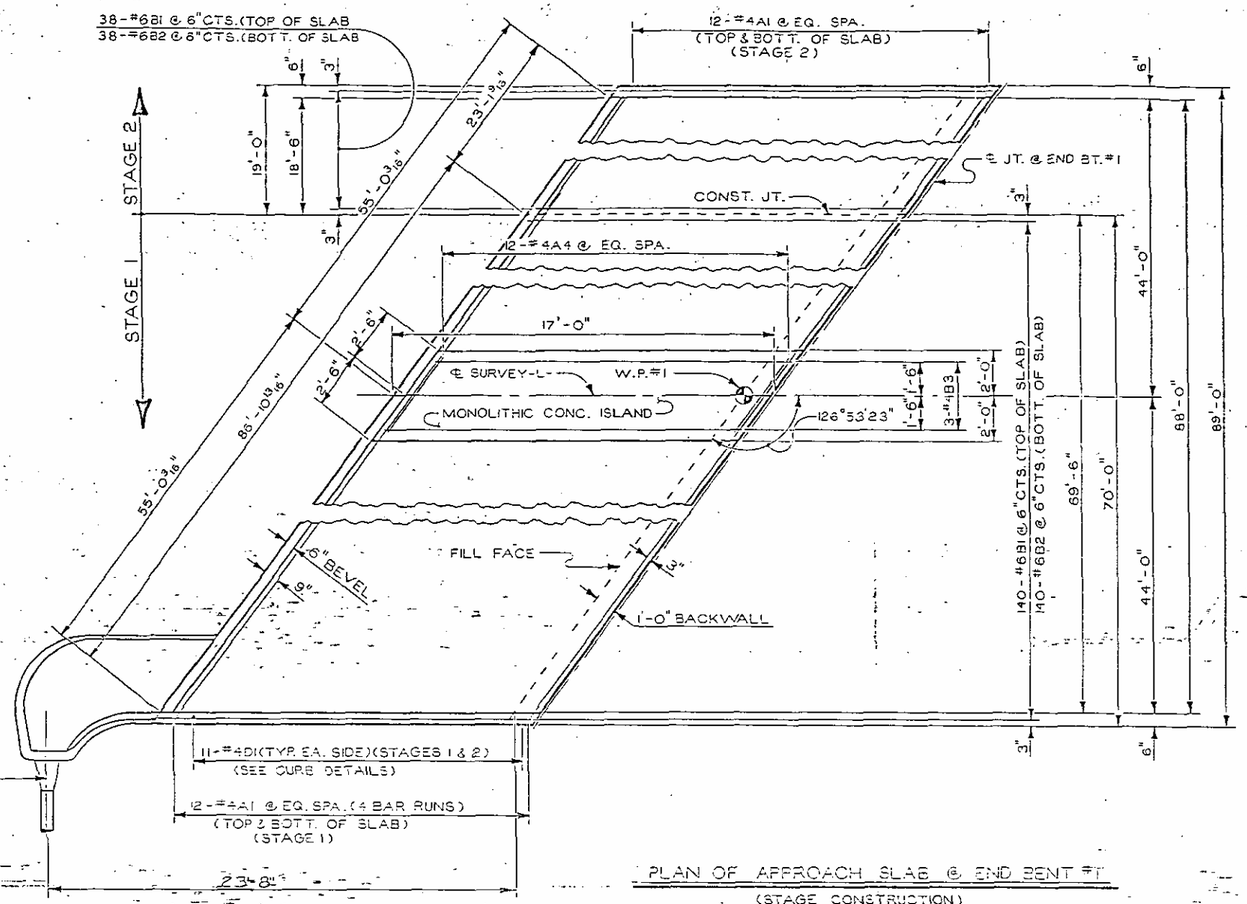

PLAN OF APPROACH SLAB @ END BENT #1

(STAGE CONSTRUCTION)

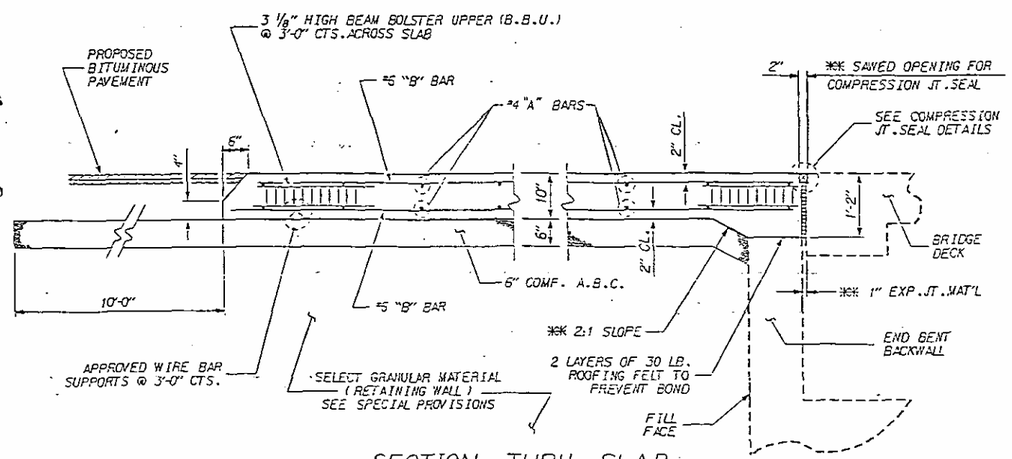

SECTION THRU SLAB

** NORMAL TO END BENT

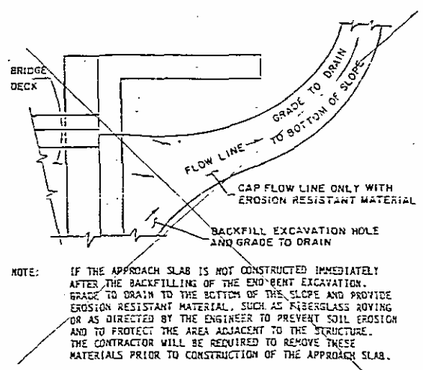

NOTE: IF THE APPROACH SLAB IS NOT CONSTRUCTED IMMEDIATELY AFTER THE BACKFILLING OF THE END BENT EXCAVATION, GRADE TO DRAIN TO THE BOTTOM OF THE SLOPE AND PROVIDE EROSION RESISTANT MATERIAL, SUCH AS FIBERGLASS ROVING OR AS DIRECTED BY THE ENGINEER TO PREVENT SOIL EROSION AND TO PROTECT THE AREA ADJACENT TO THE STRUCTURE. THE CONTRACTOR WILL BE REQUIRED TO REMOVE THESE MATERIALS PRIOR TO CONSTRUCTION OF THE APPROACH SLAB.

TEMPORARY DRAINAGE DETAILS

NOTES

FOR BRIDGE APPROACH SLABS. SEE SPECIAL PROVISIONS.

FOR PREFORMED COMPRESSION JOINT SEAL. SEE SPECIAL PROVISIONS.

THE PREFORMED COMPRESSION JOINT SEAL SHALL BE PAID FOR AT THE CONTRACT LUMP SUM PRICE BID. SEE GENERAL DRAWING.

THE OPENING SHOWN IS BASED ON A NOMINAL UNCOMPRESSED SEAL WIDTH OF 3".

THE JOINT SHALL BE SAWED PRIOR TO THE CASTING OF THE CONCRETE CURB TO THE CONSTRUCTION JOINT AND BARRIER RAIL. FOR LOCATION OF CONSTRUCTION JOINT SEE CURB DETAILS.

THE 6" COMP. A.B.C. IS TO EXTEND 10'- 0" BEYOND THE SLAB AS SHOWN AND 1'- 0" OUTSIDE OF EACH EDGE OF SLAB. IF SPECIAL DRAINAGE IS USED, THE 6" COMP. A.B.C. SHALL ALSO EXTEND UNDER THE CONCRETE FLUME AND 1'- 0" OUTSIDE OF EACH EDGE OF CURB.

SUBDRAIN FINE AGGREGATE IS TO BE CONTINUOUS ALONG FILL FACE OF BACKWALL AND END BENT FROM OUTSIDE EDGE TO OUTSIDE EDGE OF APPROACH SLAB.

~~THE CONTRACTOR, AT HIS OPTION, MAY USE 4" BITUMINOUS CONCRETE BASE COURSE, TYPE HB IN LIEU OF 5" A.B.C. ANY ADDITIONAL COST DUE TO THE USE OF THIS OPTION WILL BE PAID FOR BY THE CONTRACTOR.~~

THE 1" EXPANSION JOINT MATERIAL IS TO BE HELD IN PLACE WITH GALVANIZED NAILS.

DOWELS MAY BE PUSHED INTO GREEN CONCRETE AFTER THE SLAB HAS BEEN SCREENED AND FLOAT FINISHED EXCEPT AS NOTED ON THE PLANS.

NO DIRECT PAYMENT WILL BE MADE FOR THE TEMPORARY DRAINAGE AS SUCH WORK WILL BE CONSIDERED INCIDENTAL TO OTHER WORK BEING PAID FOR BY THE VARIOUS ITEMS IN THE CONTRACT.

AREA BETWEEN THE WINGWALL AND APPROACH SLAB SHALL BE GRADED TO DRAIN THE WATER AWAY FROM THE FILL FACE OF THE BRIDGE.

PROJECT NO. 8.1236903

JOHNSTON COUNTY

STATION: 536+91.47-L-

SHEET 1 OF 3

STATE OF NORTH CAROLINA

DEPARTMENT OF TRANSPORTATION

RALEIGH

BRIDGE APPROACH SLAB FOR FLEXIBLE PAVEMENT

REVISIONS						
NO.	BY	DATE	NO.	BY	DATE	SHEET NO. 2-15
1			3			TOTAL SHEETS ~~107~~
2			4			

DRAWN BY D. A. GLADDEN DATE 3-3-93

CHECKED BY S. D. COCK/CBS DATE 5-11-93

#10

260

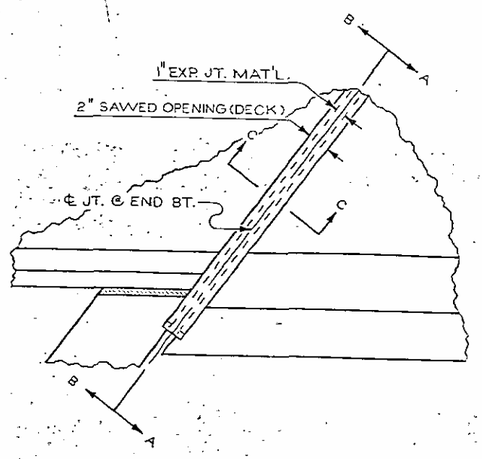

PLAN

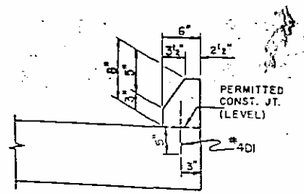

SECTION L-L

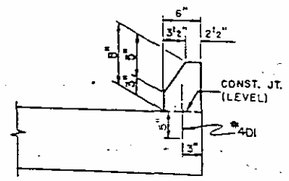

SECTION M-M

* THESE DOWELS ARE TO BE PLACED AFTER SAWING OF THE JOINT. THE HOLES SHALL BE DRILLED AND THE DOWELS GROUTED IN PLACE.

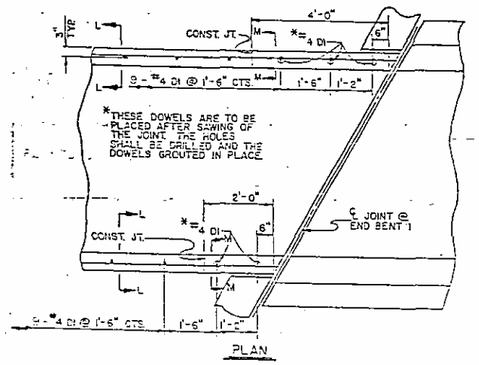

PLAN

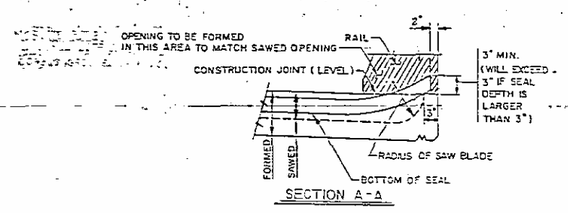

SECTION A-A

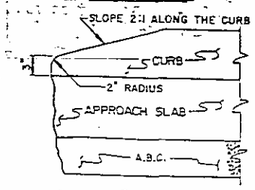

DETAIL @ END OF CURB

CURB DETAILS

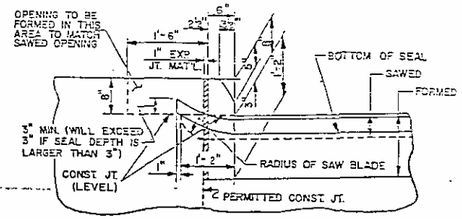

SECTION B-B

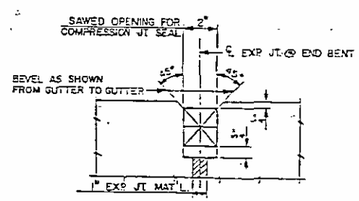

SECTION C-C

COMPRESSION JOINT SEAL DETAILS @ END BENT

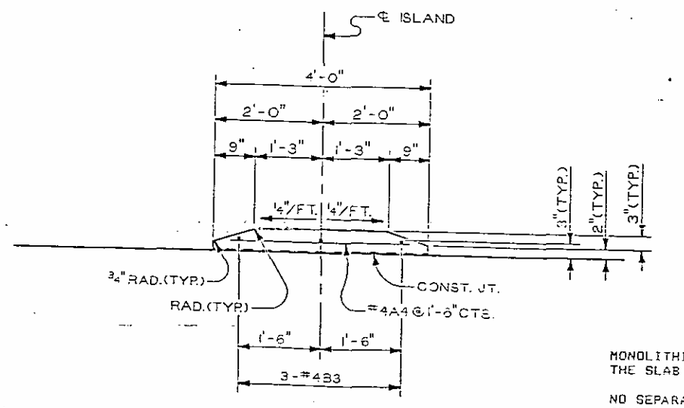

MONOLITHIC CONCRETE ISLAND DETAIL

BILL OF MATERIAL

APPROACH SLAB @ END BENT #1

BAR	NO.	SIZE	TYPE	LENGTH	WEIGHT
A1	120	4	STR	23- 5	1,877
B1	178	6	STR	15- 8	4,189
B2	178	6	STR	16- 8	4,456
D1	22	4	STR	0-10	12
CLASS "AA" CONCRETE				C.Y.	48.4
REINFORCING STEEL				LBS.	10,534

MONOLITHIC CONCRETE ISLAND

BAR	NO.	SIZE	TYPE	LENGTH	WEIGHT
A4	12	4	STR	4- 2	33
B3	3	4	STR	15-11	32
CLASS "AA" CONCRETE				C.Y.	0.9
REINFORCING STEEL				LBS.	65

FLUME (AT END BENT 1)

BAR	NO.	SIZE	TYPE	LENGTH	WEIGHT
F1	6	5	STR	13- 3	83
F2	8	4	STR	3- 9	20
CLASS "AA" CONCRETE				C.Y.	1.8
REINFORCING STEEL				LBS.	103

APPROACH SLAB @ END

BAR	NO.	SIZE	TYPE	LE
A3	96	4	STR	
B1	178	6	STR	
B2	178	6	STR	
D1	22	4	STR	
CLASS "AA" CONCRETE				
REINFORCING STEEL				

MONOLITHIC CONCRETE

BAR	NO.	SIZE	TYPE	LE
A4	12	4	STR	
B3	5	4	STR	
CLASS "AA" CONCRETE				
REINFORCING STEEL				

FLUME (AT END BE

BAR	NO.	SIZE	TYPE	LE
F1	6	5	STR	
F2	8	4	STR	
CLASS "AA" CONCRETE				
REINFORCING STEEL				

NOTES

MONOLITHIC CONCRETE ISLAND SHALL BE POURED AFTER THE SLAB HAS BEEN POURED.

NO SEPARATE MEASUREMENT OR PAYMENT WILL BE MADE FOR MATERIALS OR LABOR REQUIRED TO CONSTRUCT THE MONOLITHIC CONCRETE ISLAND. THE COST OF THIS WORK WILL BE INCLUDED IN THE LUMP SUM PRICE BID FOR THE BRIDGE APPROACH SLAB.

PROJECT NO. 8.12

JOHNSTON

STATION: 536+91

SHEET 3 OF 3

STATE OF NORTH CAROLINA
DEPARTMENT OF TRANS
RALEIGH

BRIDGE APPROACH SLA
DETAILS &
BILL OF MATERI

REVISIONS					
NO.	BY	DATE	NO.	BY	
1			3		
2			4		

DRAWN BY D. A. GLADDEN DATE 3-18-88
CHECKED BY S. J. Cook/Pcc DATE 5-11-88

262