PROJECT REFERENCE NO.	SHEET NO.
U-6018	Sig-11.1

18 CHANNEL IP CONFLICT MONITOR PROGRAMMING DETAIL

(remove jumpers and set switches as shown)

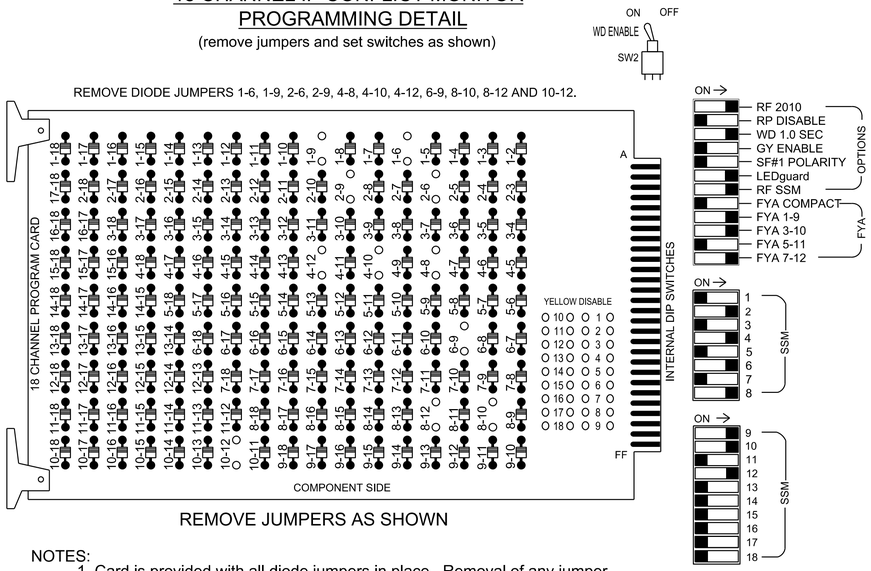

REMOVE JUMPERS AS SHOWN

NOTES:

1. Card is provided with all diode jumpers in place. Removal of any jumper allows its channels to run concurrently.
2. Ensure jumpers SEL2-SEL5 and SEL9 are present on the monitor board.
3. Ensure that the Red Enable is active at all times during normal operation.
4. Integrate monitor with Ethernet network in cabinet.

INPUT FILE POSITION LAYOUT

(front view)

		1	2	3	4	5	6	7	8	9	10	11	12	13	14
FILE "I"	U	Ø 1 1A	SLOT EMPTY	SLOT EMPTY	SLOT EMPTY	SLOT EMPTY	SLOT EMPTY	SLOT EMPTY	SLOT EMPTY	SLOT EMPTY	SLOT EMPTY	SLOT EMPTY	SLOT EMPTY	SLOT EMPTY	FS DC ISOLATOR
	L	NOT USED													ST DC ISOLATOR
FILE "J"	U	SLOT EMPTY	SLOT EMPTY	SLOT EMPTY	WIRED INPUT ⊗	SLOT EMPTY	SLOT EMPTY	SLOT EMPTY	SLOT EMPTY	SLOT EMPTY	SLOT EMPTY	SLOT EMPTY	SLOT EMPTY	SLOT EMPTY	SLOT EMPTY
	L														

EX.: 1A, 2A, ETC. = LOOP NO.'S

FS = FLASH SENSE
ST = STOP TIME

⊗ Wired Input - Do not populate slot with detector card

LOAD RESISTOR INSTALLATION DETAIL

(install resistor as shown)

ACCEPTABLE VALUES

VALUE (ohms)	WATTAGE
1.5K - 1.9K	25W (min)
2.0K - 3.0K	10W (min)

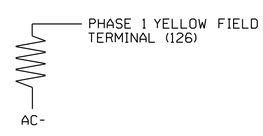

NOTES

1. To prevent "flash-conflict" problems, insert red flash program blocks for all vehicle load switches in the output file. The installer shall verify that signal heads flash in accordance with the Signal Plans.
2. Program phases 4 and 8 for Dual Entry.
3. Program controller to start up in phase 2 Green and 6 Green.
4. The cabinet and controller are part of the High Point Signal System.

EQUIPMENT INFORMATION

CONTROLLER.....2070LX
CABINET.....332 W/ AUX
SOFTWARE.....ECONOLITE ASC/3-2070
CABINET MOUNT.....BASE
OUTPUT FILE POSITIONS...18 WITH AUX. OUTPUT FILE
LOAD SWITCHES USED.....S1,S2,S5,S8,S11,
AUX S1,AUX S2,AUX S5
PHASES USED.....1,2,4,6,8
OVERLAP "A".....✳
OVERLAP "B".....✳
OVERLAP "C".....NOT USED
OVERLAP "D".....✳

✳ See overlap programming on sheet 2.

SIGNAL HEAD HOOK-UP CHART

LOAD SWITCH NO.	S1	S2	S3	S4	S5	S6	S7	S8	S9	S10	S11	S12	AUX S1	AUX S2	AUX S3	AUX S4	AUX S5	AUX S6
CMU CHANNEL NO.	1	2	13	3	4	14	5	6	15	7	8	16	9	10	17	11	12	18
PHASE	1	2	2 PED	3	4	4 PED	5	6	6 PED	7	8	8 PED	OLA	OLB	SPARE	OLC	OLD	SPARE
SIGNAL HEAD NO.	11★	21,22	NU	NU	42,43	NU	NU	61,62	NU	NU	82,83	NU	11★	81★	NU	NU	41★	NU
RED		128			101			134			107							
YELLOW	✳	129			102			135			108							
GREEN		130			103			136			109							
RED ARROW													A121	A124			A101	
YELLOW ARROW													A122	A125			A102	
FLASHING YELLOW ARROW													A123	A126			A103	
GREEN ARROW	127																	

NU = Not Used
★ See pictorial of head wiring in detail this sheet.
✳ Denotes install load resistor. See load resistor installation detail this sheet.

SPECIAL DETECTOR NOTE

For all loops, install a multizone microwave detection system for vehicle detection. Perform installation according to the manufacturer's directions and NCDOT engineer approved mounting locations to accomplish the detection schemes shown on the Signal Design Plans.

For Detection Zone 1A, the equipment and slot reserved for wired input is typical for an NCDOT installation.

INPUT FILE CONNECTION & PROGRAMMING CHART

LOOP NO.	LOOP TERMINAL	INPUT FILE POS.	PIN NO.	DETECTOR NO.	NEMA PHASE	CALL	EXTEND TIME	DELAY TIME	ADDED INITIAL	DETECTOR TYPE
1A [1]	TB2-1,2	I1U	56	1★	1	YES		15		N
	-	J4U	48	26★	6	YES		3		G

[1] Add jumper from I1-W to J4-W, on rear of input file.
★ See vehicle detector setup programming detail for alternate phasing on sheet 2.

FLASHER CIRCUIT MODIFICATION DETAIL

IN ORDER TO ENSURE THAT SIGNALS FLASH CONCURRENTLY ON THE SAME APPROACH, MAKE THE FOLLOWING FLASHER CIRCUIT CHANGES:

1. ON REAR OF PDA - REMOVE WIRE FROM TERM. T2-4 AND TERMINATE ON T2-2.
2. ON REAR OF PDA - REMOVE WIRE FROM TERM. T2-5 AND TERMINATE ON T2-3.
3. REMOVE FLASHER UNIT 2.

THE CHANGES LISTED ABOVE TIES ALL PHASES AND OVERLAPS TO FLASHER UNIT 1.

FYA SIGNAL WIRING DETAIL

(wire signal heads as shown)

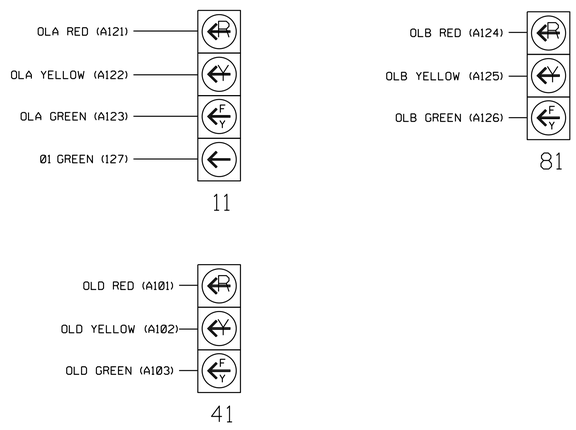

THIS ELECTRICAL DETAIL IS FOR
THE SIGNAL DESIGN: 07-2100T2
DESIGNED: Mar 2025
SEALED: 3/17/2025
REVISED: N/A

Electrical Detail - Sheet 1 of 4
Temporary Design 2 (TMP Phase 2, Step B and TMP Phase III)

DOCUMENT NOT CONSIDERED FINAL UNLESS ALL SIGNATURES COMPLETED

ELECTRICAL AND PROGRAMMING DETAILS FOR:

NC 62 (Liberty Road) at SR 1162 (Weant Road) / SR 4066 (Modlin Grove Road)

Division 7 Guilford County Archdale

PLAN DATE:	March 2025	REVIEWED BY:	ZM Esposito
PREPARED BY:	AW Poole	RKA PROJ. NO.:	17380 (040)

REVISIONS	INIT.	DATE

SEAL

NORTH CAROLINA PROFESSIONAL SEAL 054155 ENGINEER ZACHARY M. ESPOSITO

Signed by: Zachary M. Esposito 3/17/2025
DocuSigned by: 5647DD7D8B9B4AA... SIGNATURE DATE

SIG. INVENTORY NO. 07-2100T2

DRMP
DRMP INC.
8210 UNIVERSITY EXECUTIVE PARK DR.
SUITE 201
CHARLOTTE, NC 28262
PHONE: 704-549-4260
NC LICENSE NO. F-1524
www.drmp.com

750 N.Greenfield Pkwy,Garner,NC 27529