Docusign Envelope ID: 257291A4-2ADC-4248-B6F4-B7D389D3D7CF

8/17/99

PROJECT REFERENCE NO.	SHEET NO.
U-6018	2A-1

ROADWAY DESIGN ENGINEER
NORTH CAROLINA PROFESSIONAL SEAL 050515 ENGINEER KAYLA M. POULOS
5/5/2025

PAVEMENT DESIGN ENGINEER
NORTH CAROLINA PROFESSIONAL SEAL 028422 ENGINEER DONALD W. BROWN JR.
5/5/2025

DOCUMENT NOT CONSIDERED FINAL UNLESS ALL SIGNATURES COMPLETED

DRMP
DRMP, INC.
5808 FARRINGDON PLACE
RALEIGH, NC 27609
(919) 872-5115
NC LICENSE NO. F-1524
www.drmp.com

FINAL PAVEMENT SCHEDULE

A1	7" JOINTED CONCRETE TRUCK APRON	D1	PROP. APPROX. 4" ASPHALT CONCRETE INTERMEDIATE COURSE, TYPE I19.0C AT AN AVERAGE RATE OF 456 LBS. PER SQ. YD.	K	12" CLASS IV SUBGRADE STABILIZATION	S	4" CONCRETE SIDEWALK
C1	PROP. APPROX. 1.25" ASPHALT CONCRETE SURFACE COURSE, TYPE S9.5B, AT AN AVERAGE RATE OF 137.5 LBS. PER SQ. YD.	D2	PROP. VAR. DEPTH ASPHALT CONCRETE INTERMEDIATE COURSE, TYPE I19.0C, AT AN AVERAGE RATE OF 114 LBS. PER SQ. YD. PER 1" DEPTH TO BE PLACED IN LAYERS NO LESS THAN 2.5" IN DEPTH OR GREATER THAN 4" IN DEPTH.	N	GEOTEXTILE FOR SUBGRADE STABILIZATION	T	COMPACTED EARTH MATERIAL
C2	PROP. APPROX. 1.5" ASPHALT CONCRETE SURFACE COURSE, TYPE S9.5B, AT AN AVERAGE RATE OF 165 LBS. PER SQ. YD.	E1	PROP. APPROX. 4" ASPHALT CONCRETE BASE COURSE, TYPE B25.0C, AT AN AVERAGE RATE OF 456 LBS. PER SQ. YD.	R1	1-6" CURB AND GUTTER	U	EXISTING PAVEMENT
C3	PROP. APPROX. 2.5" ASPHALT CONCRETE SURFACE COURSE, TYPE S9.5B, AT AN AVERAGE RATE OF 137.5 LBS. PER SQ. YD. IN EACH OF TWO LAYERS.	E2	PROP. APPROX. 5" ASPHALT CONCRETE BASE COURSE, TYPE B25.0C, AT AN AVERAGE RATE OF 570 LBS. PER SQ. YD.	R2	2'-6" CURB AND GUTTER	V	INCIDENTAL MILLING (SEE DETAIL ON SHEET 2A-3)
C4	PROP. APPROX. 3" ASPHALT CONCRETE SURFACE COURSE, TYPE S9.5B, AT AN AVERAGE RATE OF 165 LBS. PER SQ. YD. IN EACH OF TWO LAYERS.	E3	PROP. VAR. DEPTH ASPHALT CONCRETE BASE COURSE, TYPE B25.0C, AT AN AVERAGE RATE OF 114 LBS. PER SQ. YD. PER 1" DEPTH TO BE PLACED IN LAYERS NOT LESS THAN 3" IN DEPTH OR GREATER THAN 5.5" IN DEPTH.	R3	SPILL CURB (SEE DETAIL ON SHEET 2A-5)	V1	1.5" MILLING
C5	PROP. VAR. DEPTH ASPHALT CONCRETE SURFACE COURSE, TYPE S9.5B, AT AN AVERAGE RATE OF 110 LBS. PER SQ. YD. PER 1" DEPTH TO BE PLACED IN LAYERS NOT TO EXCEED 1.5" IN DEPTH.	J1	6" AGGREGATE BASE COURSE	R4	5" MONOLITHIC CONCRETE ISLAND (SURFACE MOUNTED 4' OR GREATER / KEYED IN LESS THAN 4')	W1-W3	WEDGING (SEE DETAILS ON SHEET 2A-6)

NOTE: ALL PAVEMENT SLOPES ARE 1:1 UNLESS OTHERWISE SPECIFIED.

℄ -L- NC 62 (LIBERTY ROAD)

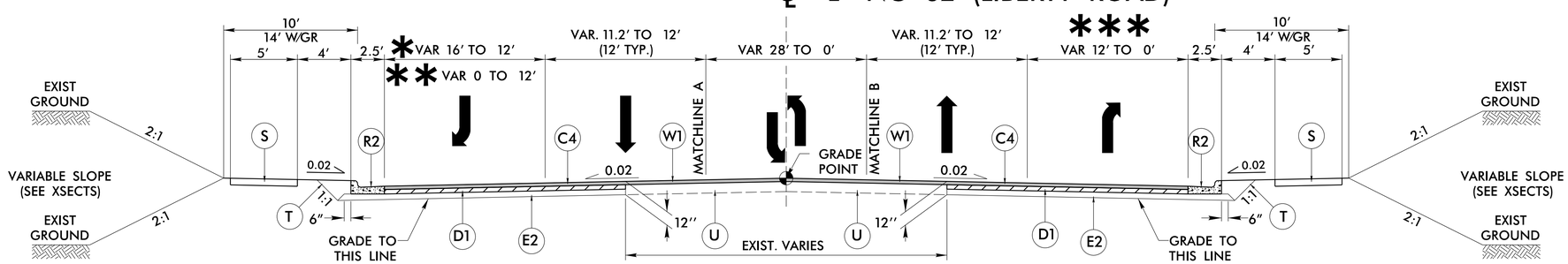

TYPICAL SECTION NO. 1

-L- STA. 26+70.00 TO -L- STA. 50+41.77
-L- STA. 59+19.32 TO -L- STA. 77+86.12
* -L- STA. 39+17.03 TO -L- STA. 48+66.94
** -L- STA. 60+96.82 TO -L- STA. 65+96.82
*** -L- STA. 44+05.07 TO -L- STA. 48+54.43

NOTE: SEE PLANS FOR LOCATION OF INTERSECTION TURNOUTS, TURN LANES, ISLANDS AND BULBOUT.

MEDIAN ISLAND
-L- STA. 46+33.95 TO -L- STA. 49+74.98
-L- STA. 59+92.00 TO -L- STA. 63+16.12

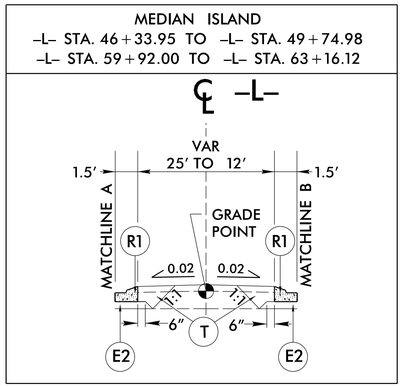

℄ -L- NC 62 (LIBERTY ROAD)

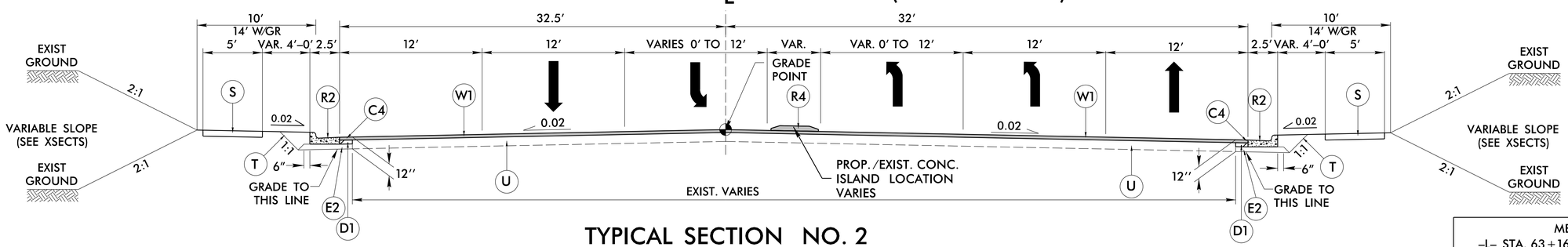

TYPICAL SECTION NO. 2

-L- STA. 50+41.77 TO -L- STA. 52+75.06
-L- STA. 56+71.20 TO -L- STA. 59+19.32
MAINTAIN EXIST. CONC. ISLAND AND GRADE FROM -L- STA. 52+33.96 TO -L- STA. 57+12.38 (EXISTING BRIDGE)
NOTE: SEE PLANS FOR LOCATION OF TURN LANES AND ISLANDS.

MEDIAN ISLAND
-L- STA. 63+16.12 TO -L- STA. 70+21.54

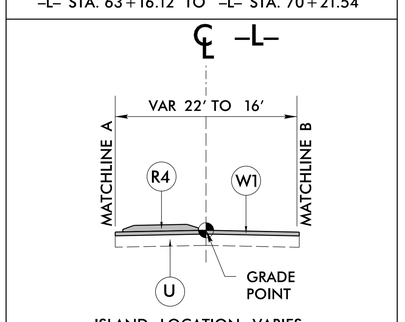

ISLAND LOCATION VARIES SEE PLANS

℄ -L- NC 62 (LIBERTY ROAD)

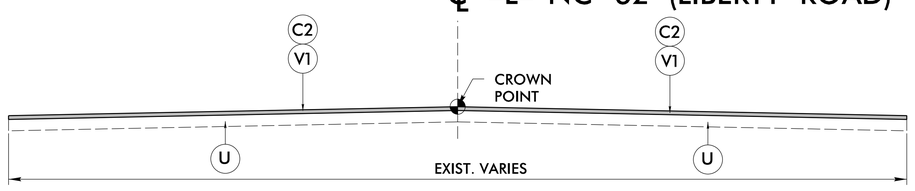

1.5" MILLING DETAIL

-L- STA. 51+75.00 TO -L- STA. 52+33.96
-L- STA. 57+12.38 TO -L- STA. 58+95.73

NOTE: USE IN CONJUNCTION WITH TYPICAL SECTION NO. 2

5/5/2025
...\Roadway\Proj\U6018_Rdy_typ.dgn
User: mlindsey