TIP PROJECT: U-5899

CONTRACT: C205041

STATE	STATE PROJECT REFERENCE NO.	SHEET NO.	TOTAL SHEETS
N.C.	U-5899	ST	

STATE PROJECT NO.	F.A. PROJ. NO.	DESCRIPTION
44689.1.1	N/A	PE
44689.2.1	N/A	ROW
44689.2.2	N/A	UTL.
44689.3.1	N/A	CONST.

STATE OF NORTH CAROLINA
DIVISION OF HIGHWAYS

FORSYTH COUNTY

LOCATION: FORUM PARKWAY CONNECTOR FROM SR 3955 (FORUM PARKWAY) TO NC 66 (UNIVERSITY PARKWAY) IN RURAL HALL

TYPE OF WORK: DRAINAGE, GRADING, PAVING AND STRUCTURES

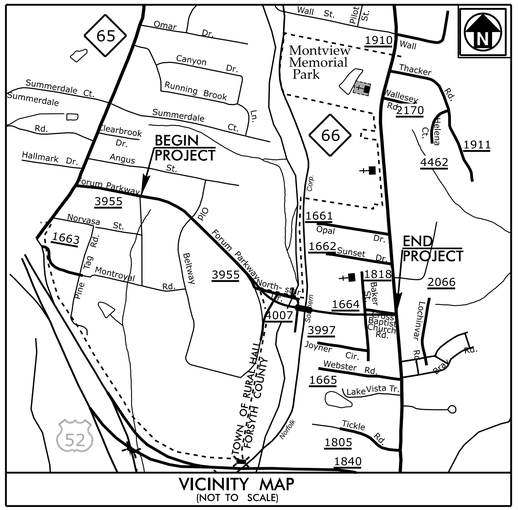

VICINITY MAP
(NOT TO SCALE)

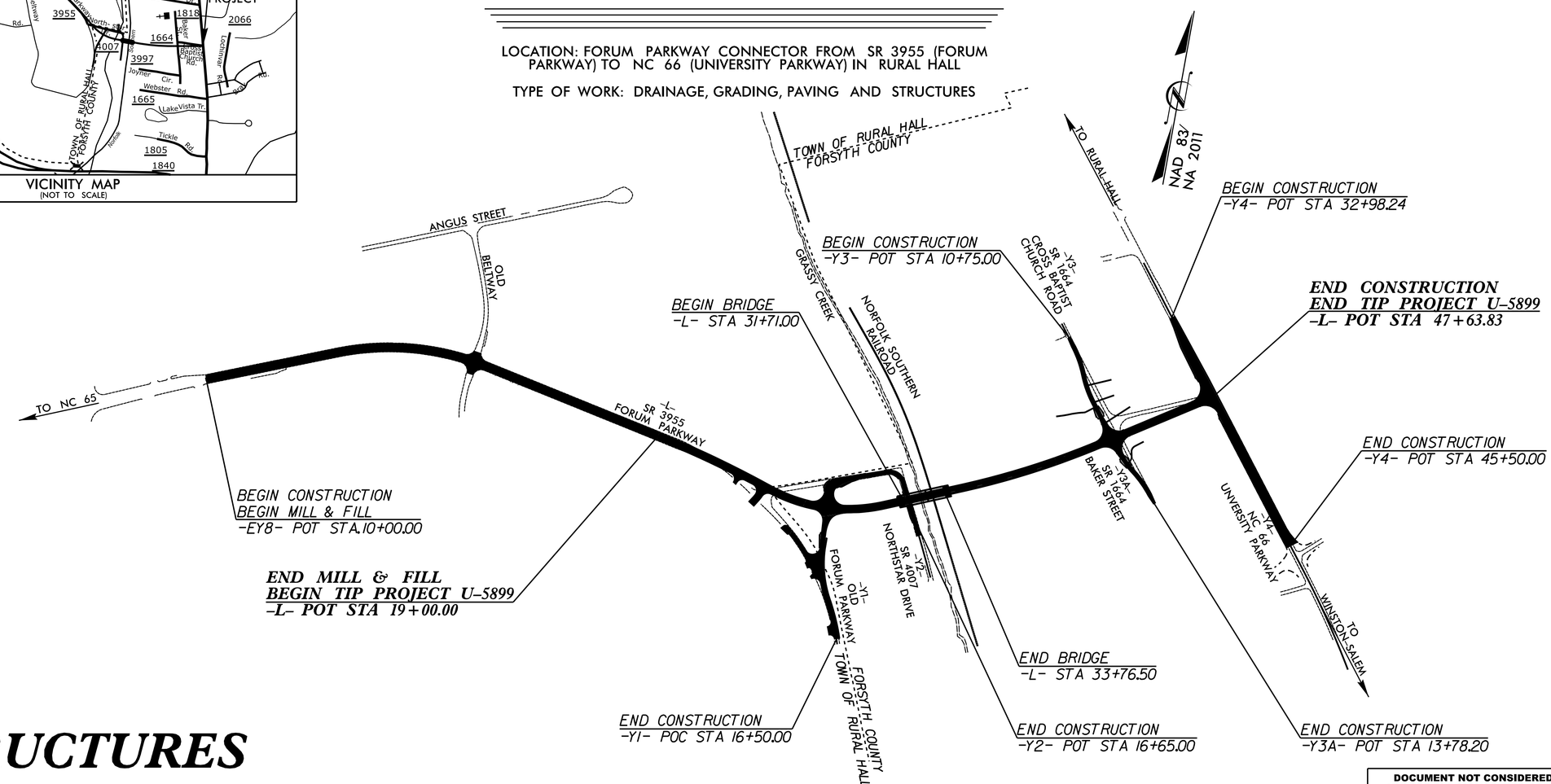

STRUCTURES

DOCUMENT NOT CONSIDERED FINAL UNLESS ALL SIGNATURES COMPLETED

STATE OF NORTH CAROLINA DEPARTMENT OF TRANSPORTATION

DESIGN DATA

ADT 2024 = 6,100
ADT 2044 = 7,300
D = 70%
T = 13%*
V = 40 MPH

*TTST = 8% DUAL = 5%

LOCAL DIVISION TIER

PROJECT LENGTH

LENGTH ROADWAY TIP PROJECT	=	0.503 MILES
LENGTH STRUCTURE TIP PROJECT	=	0.039 MILES
TOTAL LENGTH TIP PROJECT	=	0.542 MILES

Prepared in the Office of Matt MacDonald for

DIVISION 9

NORTH CAROLINA DEPARTMENT OF TRANSPORTATION

2024 STANDARD SPECIFICATIONS

RIGHT OF WAY DATE:
DECEMBER 17, 2021

LETTING DATE:
JUNE 17, 2025

NCDOT CONTACT: CONNIE JAMES, PE
NCDOT DIVISION PROJECT ENGINEER

PLANS PREPARED BY:

MOTT MACDONALD
930 Main Campus Drive, Suite 200
Raleigh, NC 27606
(919) 552-2253
www.mottmac.com

LICENSE NO. F-0669

5/8/2025
2:24:18 PM
c:\pwworking\rail transit\d0172438\400.000.U-5899_TSH.dgn
KAV106794

Docusign Envelope ID: 16E2D990-30DC-440F-9F27-F28A276FE772

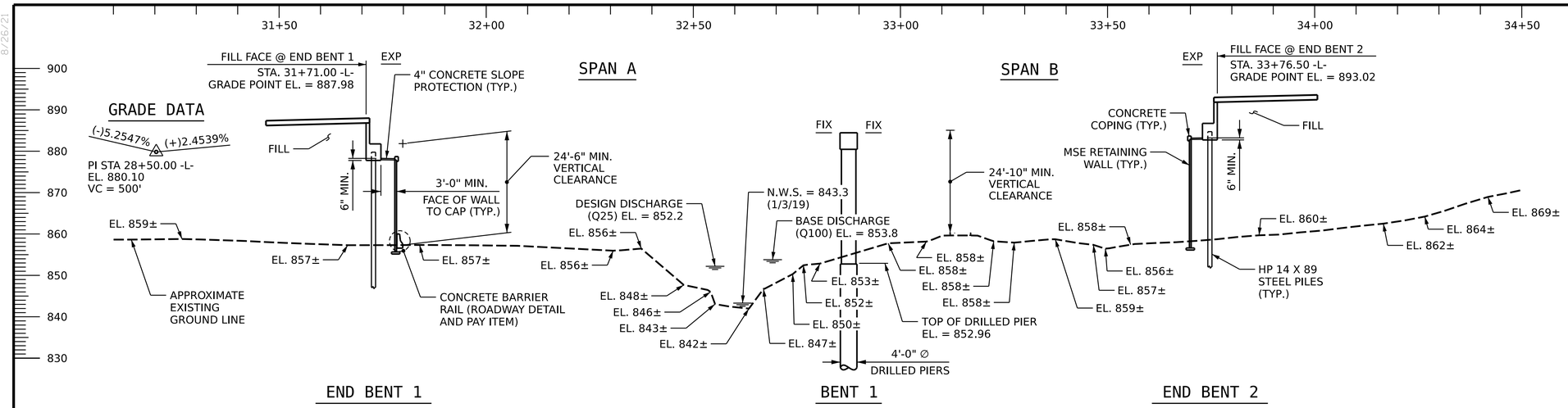

SECTION ALONG -L-

SECTIONS AT END BENTS AND BENT ARE TAKEN AT RIGHT ANGLES

TOP OF RAIL ELEVATIONS			
LEFT RAIL		RIGHT RAIL	
STATION	ELEVATION	STATION	ELEVATION
18+98.24	860.73	18+98.24	860.65
19+18.24	860.61	19+18.24	860.56
19+38.24	860.52	19+38.24	860.49
19+58.24	860.43	19+58.24	860.42
19+78.24	860.34	19+78.24	860.33
19+98.24	860.24	19+98.24	860.24
20+18.24	860.15	20+18.24	860.15
20+38.24	860.06	20+38.24	860.06
20+58.24	859.99	20+58.24	859.98
20+78.24	859.93	20+78.24	859.91
20+98.24	859.85	20+98.24	859.83

I HEREBY CERTIFY THESE PLANS ARE THE AS-BUILT PLANS

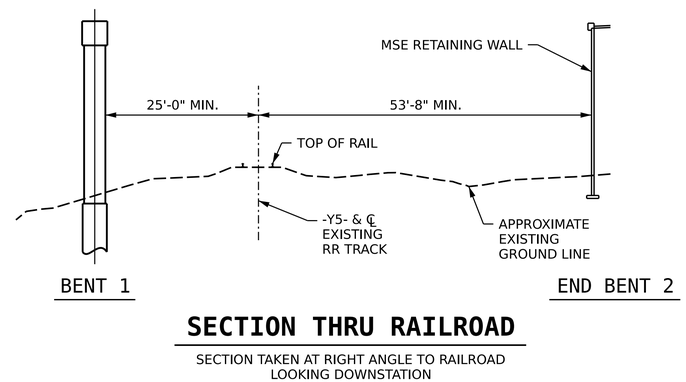

SECTION THRU RAILROAD

SECTION TAKEN AT RIGHT ANGLE TO RAILROAD LOOKING DOWNSTATION

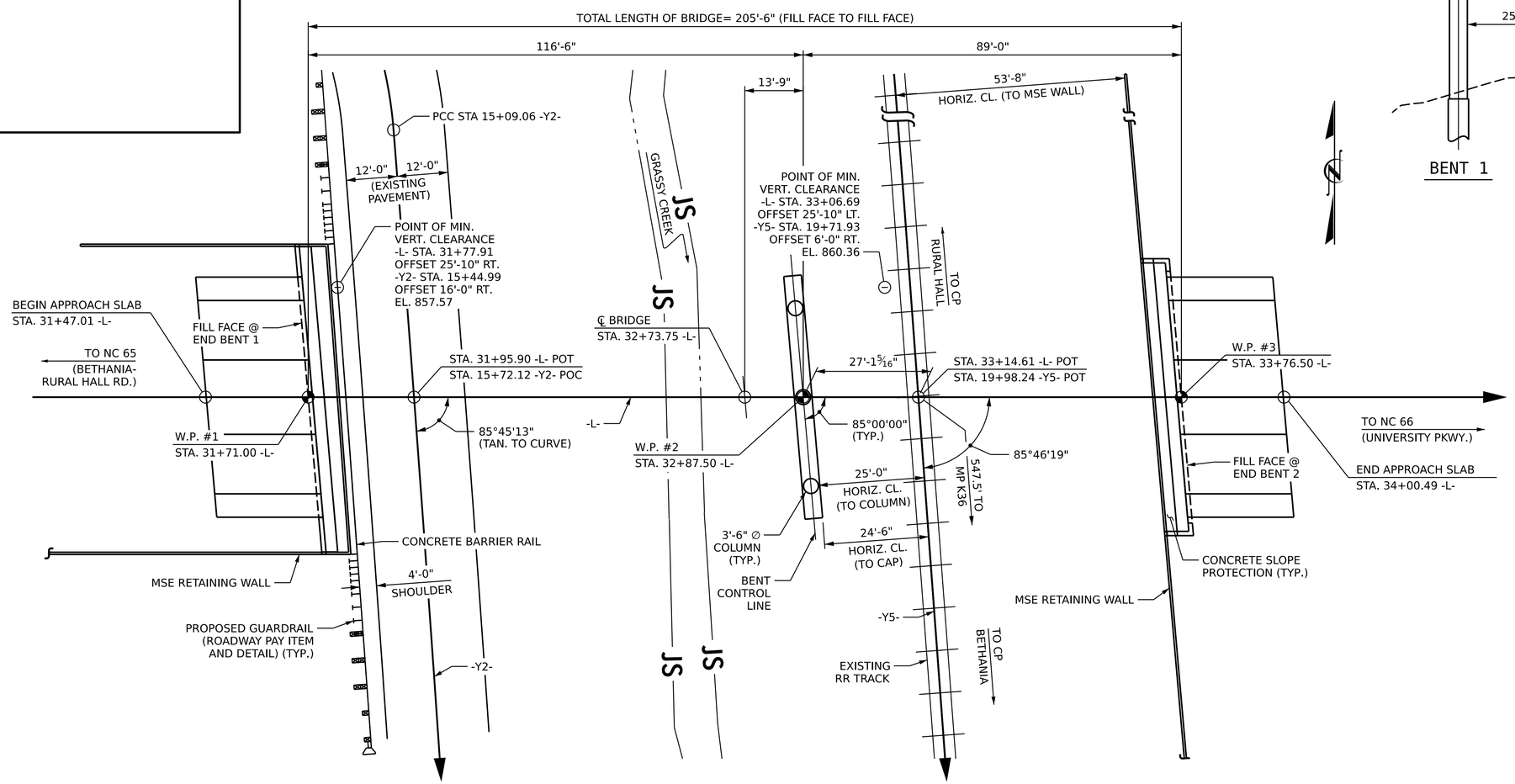

PLAN

PILES NOT SHOWN FOR CLARITY

PROJECT NO. U-5899

FORSYTH COUNTY

STATION: 32+73.75 -L-

BRIDGE NO. 330747
M.P. K36.1

SHEET 1 OF 4

PREPARED BY

MOTT MACDONALD
7621 Parfrey Rd., Suite 115
Fuquay-Varina, NC 27526
(919) 552-2353
License No. F-0669
www.mottmac.com

NORTH CAROLINA PROFESSIONAL SEAL 039313 ENGINEER JUSTIN M. ROBINSON
DocuSigned by: 31-Mar-2025

STATE OF NORTH CAROLINA
DEPARTMENT OF TRANSPORTATION
RALEIGH

GENERAL DRAWING

BRIDGE ON SR 3955
(FORUM PKWY.) OVER SR 4007
(NORTHSTAR DR.), GRASSY CREEK,
& NORFOLK SOUTHERN RAILROAD
BETWEEN NC 65 AND NC 66

REVISIONS						SHEET NO.
NO.	BY:	DATE:	NO.	BY:	DATE:	S01-01
1			3			TOTAL SHEETS
2			4			36

DOCUMENT NOT CONSIDERED FINAL UNLESS ALL SIGNATURES COMPLETED

DRAWN BY :	J. T. WILLIAMS/L. L. BLANKENSHIP	DATE :	10-2023
CHECKED BY :	J. M. ROBINSON	DATE :	10-2023
DESIGN ENGINEER OF RECORD:	J. T. WILLIAMS	DATE :	10-2023

8/26/21

1/27/2025 6:03:28 PM
R:\Structures\BRG_01_330747\Plans\401_001_U-5899_SMU_GD_S01-01_330747.dgn
WILS7077

Docusign Envelope ID: 16E2D990-30DC-440F-9F27-F28A276FE772

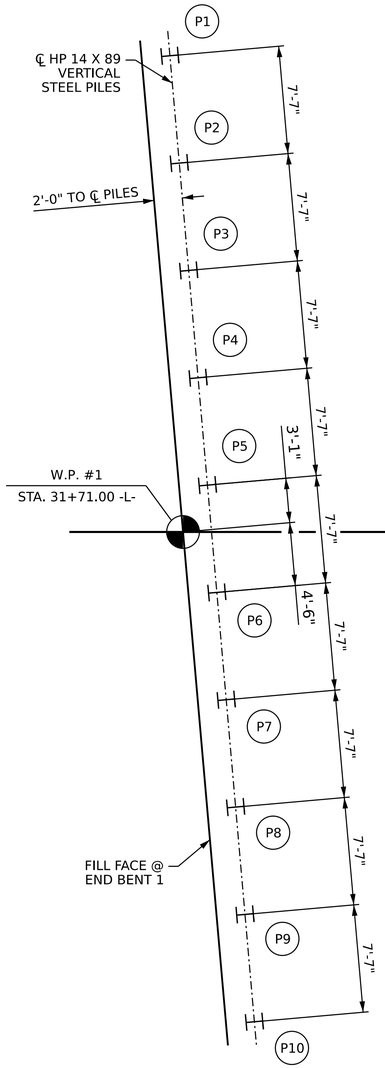

END BENT 1

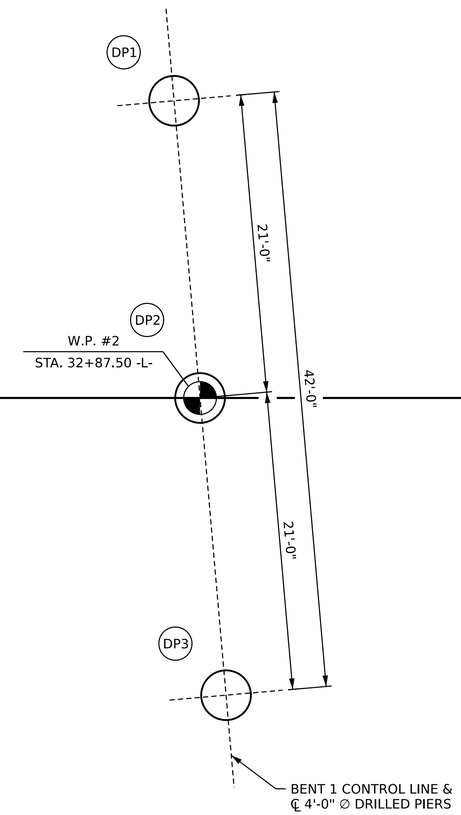

BENT 1

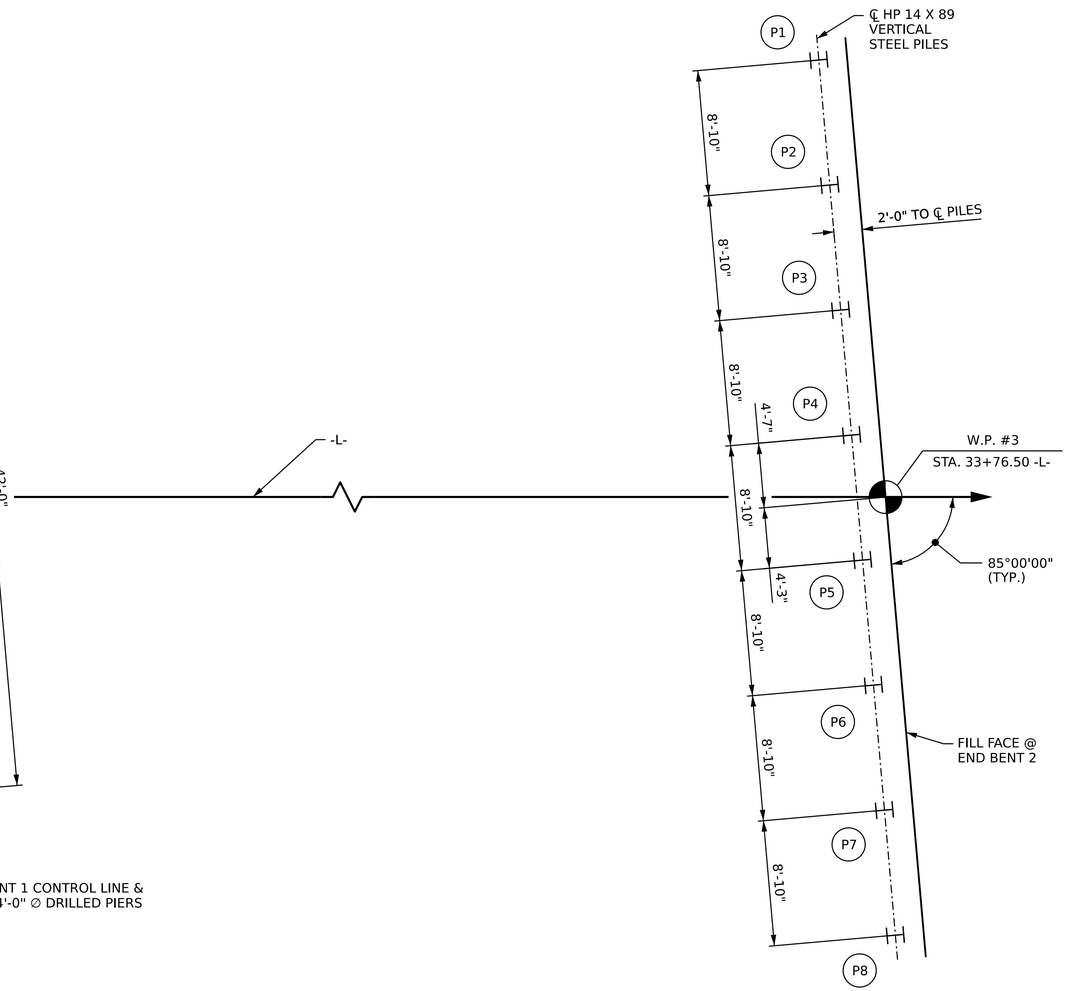

END BENT 2

NOTES:

FOR PILES, SEE PILES PROVISION AND SECTION 450 OF THE STANDARD SPECIFICATIONS.

OBSERVE A 3 MONTH WAITING PERIOD AFTER CONSTRUCTING THE EMBANKMENT, END BENT AND BRIDGE APPROACH FILL BEFORE BEGINNING APPROACH SLAB CONSTRUCTION AT END BENT NOS. 1 AND 2. FOR BRIDGE WAITING PERIODS, SEE ROADWAY PLANS AND SECTION 235 OF THE STANDARD SPECIFICATIONS. BEFORE BEGINNING THE WAITING PERIOD, INSTALL HUBS IN THE SUBGRADE AT LOCATIONS CORRESPONDING TO THE CENTER OF THE APPROACH SLAB AND AT EACH CORNER OF THE END OF THE APPROACH SLAB. SURVEY THE HUBS INITIALLY AND EVERY 3 TO 4 DAYS THEREAFTER FOR RELATIVE MOVEMENT AND SUBMIT THE DATA TO THE ENGINEER WEEKLY. THE ENGINEER WILL DETERMINE WHEN THE WAITING PERIOD ENDS AND BRIDGE APPROACH SLAB CONSTRUCTION CAN BEGIN.

FOR DRILLED PIERS, SEE SECTION 411 OF THE STANDARD SPECIFICATIONS.

POLYMER SLURRY IS REQUIRED FOR DRILLED PIERS AT BENT NO. 1.

FOUNDATION LAYOUT

DIMENSIONS LOCATING PILES AND DRILLED PIERS ARE SHOWN TO PILE AND DRILLED PIER CENTERLINES.

ORIENT PILES AS SHOWN.

(##) - PILE OR DRILLED PIER NUMBER

PROJECT NO. U-5899
FORSYTH COUNTY
STATION: 32+73.75 -L-

SHEET 2 OF 4

PREPARED BY
MOTT MACDONALD
7621 Parfey Rd., Suite 115
Fuquay-Varina, NC 27526
(919) 552-2353
License No. F-0669
www.mottmac.com

NORTH CAROLINA PROFESSIONAL SEAL 039313 ENGINEER JOSHUA M. ROBINSON
DocuSigned by: Joshua M. Robinson
D66A6B2B2B2B4E0...
31-Mar-2025

DOCUMENT NOT CONSIDERED FINAL UNLESS ALL SIGNATURES COMPLETED

STATE OF NORTH CAROLINA
DEPARTMENT OF TRANSPORTATION
RALEIGH

GENERAL DRAWING

BRIDGE ON SR 3955 (FORUM PKWY.) OVER SR 4007 (NORTHSTAR DR.), GRASSY CREEK, & NORFOLK SOUTHERN RAILROAD BETWEEN NC 65 AND NC 66

REVISIONS						SHEET NO.
NO.	BY:	DATE:	NO.	BY:	DATE:	S01-02
1			3			TOTAL SHEETS
2			4			36

DRAWN BY : L. L. BLANKENSHIP DATE : 8-2023
CHECKED BY : J. M. ROBINSON DATE : 10-2023
DESIGN ENGINEER OF RECORD: R. L. DICKE DATE : 10-2023

1/27/2025 6:08:30 PM
R:\Structures\BRO_01_330747\Plans\401_003_U-5899_SMU_FL_S01-02_330747.dgn
WIL57077

Docusign Envelope ID: 16E2D990-30DC-440F-9F27-F28A276FE772

SUMMARY OF PILE INFORMATION/INSTALLATION

(Blank entries indicate item is not applicable to structure)

End Bent / Bent No, Pile(s) #(-#) (e.g., "Bent 1, Piles 1-5")	Number of Piles per Line	Factored Resistance per Pile KIPS	Pile Cut-Off (Top of Pile) Elevation FT	Estimated Pile Length per Pile FT	Scour Critical Elevation FT	Driven Piles			Predrilling for Piles **			Drilled-In Piles		
						Minimum Pile Tip (Tip No Higher Than) Elevation FT	Required Driving Resistance (RDR)* per pile KIPS	Pile Redrives Quantity EACH	Predrilling Length per Pile LIN FT	Predrilling Elevation (Elevation Not To Predrill Below) FT	Maximum Predrilling Diameter INCHES	Pile Excavation (Bottom of Hole) Elevation FT	Pile Excavation Not In Soil per Pile LIN FT	Pile Excavation In Soil per Pile LIN FT
End Bent 1, Piles 1-5	5	288		40			600							
End Bent 1, Piles 6-10	5	288		45			600							
End Bent 2, Piles 1-4	4	300		60			728							
End Bent 2, Piles 5-8	4	300		65			728							
TOTAL QUANTITY:														

$$* \; RDR = \frac{Factored\ Resistance\ +\ Factored\ Drag\ Load\ +\ Factored\ Dead\ Load}{Dynamic\ Resistance\ Factor} + Nominal\ Drag\ Load\ Resistance + \ Nominal\ Resistance\ from\ Scourable\ Material$$

** Predrilling for Piles is required for end bents/bents with a predrilling length and at the Contractor's option for end bents/bents with predrilling information but no predrilling length.

PILE DESIGN INFORMATION

(Blank entries indicate item is not applicable to structure)

End Bent / Bent No, Pile(s) #(-#) (e.g., "Bent 1, Piles 1-5")	Factored Axial Load per Pile KIPS	Factored Drag Load per Pile KIPS	Factored Dead Load * per Pile KIPS	Dynamic Resistance Factor	Nominal Drag Resistance per Pile KIPS	Nominal Scour Resistance per Pile KIPS
End Bent 1, Piles 1-10	285	50		0.6	38	1
End Bent21, Piles 1-8	300	92		0.6	74	1

* Factored Dead Load is factored weight of pile above the ground line.

SUMMARY OF PILE ACCESSORIES

(Blank entries indicate item is not applicable to structure)

End Bent / Bent No, Pile(s) #(-#) (e.g., "Bent 1, Piles 1-5")	Pipe Pile Plates EACH	Steel Pile Points		
		Pipe Pile Cutting Shoes EACH	Pipe Pile Conical Points EACH	H-Pile Points EACH
End Bent 1, Piles 1-10				10
End Bent21, Piles 1-8				8
TOTAL QUANTITY:				18

SUMMARY OF DRILLED PIER TESTING

(Blank entries indicate item is not applicable to structure)

End Bent / Bent No, Pier(s) #(-#) (e.g., "Bent 1, Piers 1-3")	Standard Penetration Test (SPT) EACH	Crosshole Sonic Logging (CSL) EACH	Thermal Integrity Profiler (TIP) EACH	Shaft Inspection Device (SID) EACH	Pile Integrity Test (PIT) EACH
TOTAL QUANTITY:					

SUMMARY OF DRILLED PIER INFORMATION/INSTALLATION

(Blank entries indicate item is not applicable to structure)

End Bent / Bent No, Pier(s) #(-#) (e.g., "Bent 1, Piers 1-3")	Number of Piers per Line	Factored Resistance per Pier KIPS	Required Drilled Pier Tip Elevation FT	Required Tip Resistance per Pier KSF	Scour Critical Elevation FT	Minimum Drilled Pier Penetration Into Rock/ Weathered Rock per Pier LIN FT	Drilled Pier Length* per Pier LIN FT	Drilled Pier Length Not In Soil* per Pier LIN FT	Drilled Pier Length In Soil* per Pier LIN FT	Permanent Steel Casing Required? YES	Permanent Steel Casing Tip Elevation (Elevation Not To Extend Casing Below) FT	Permanent Steel Casing Length** per Pier LIN FT
Bent 1, Piers 1-3	3	1358	815	40	837	24		24	14	YES	840	13
TOTAL QUANTITY:								72	42			39

* Drilled Pier Length, Drilled Pier Length Not in Soil and Drilled Pier Length in Soil represent estimated drilled pier quantities and are measured and paid for as either "____ Dia. Drilled Piers" or "____ Dia. Drilled Piers Not in Soil" and "____ Dia. Drilled Piers in Soil" in accordance with Article 411-7 of the NCDOT Standard Specifications. For bents with a not in soil pay item, drilled piers through air or water will be paid at the contract unit price for "__Dia. Drilled Piers in Soil."

** Permanent Steel Casing Length equals the difference between the ground line or top of drilled pier elevation, whichever is higher, and the permanent casing tip elevation and is measured and paid for as "Permanent Steel Casing for ____ Dia. Drilled Pier" in accordance with Article 411-7 of the NCDOT Standard Specifications.

NOTES:

1. The Pile Foundation Tables are based on the bridge substructure design and foundation recommendations sealed by a North Carolina Professional Engineer (Shiping Yang, #031361) on 01-22-2025.
2. Total Pile Driving Equipment Setup quantity (not shown in Pile Foundation Tables) equals the number of driven piles, i.e., the number of piles with a Required Driving Resistance.
3. The Engineer may adjust the quantity for DPT Testing, Pipe Pile Plates, Permanent Steel Casing, SPTs, TIPs, CSL Testing, SID Inspections and PITs when necessary.

PROJECT NO. U-5899

FORSYTH COUNTY

STATION: 32+73.75 -L-

SHEET 3 OF 4 Bridge #747

NORTH CAROLINA PROFESSIONAL SEAL 039313 ENGINEER JUSTIN M. ROBINSON

DocuSigned by: Justin M. Robinson
C95AAB0D0A7B4A0...
31-Mar-2023

SIGNATURE DATE

DOCUMENT NOT CONSIDERED FINAL UNLESS ALL SIGNATURES COMPLETED

STATE OF NORTH CAROLINA
DEPARTMENT OF TRANSPORTATION
RALEIGH

PILE AND DRILLED PIER FOUNDATION TABLES

REVISIONS						SHEET NO. S01-03
NO.	BY:	DATE:	NO.	BY:	DATE:	TOTAL SHEETS 36
1			3			
2			4			

Docusign Envelope ID: 16E2D990-30DC-440F-9F27-F28A276FE772

BM4: RR SPIKE SET IN 16" PINE, -L- STA. 33+79.33, 255.17' RT., ELEV.= 861.31

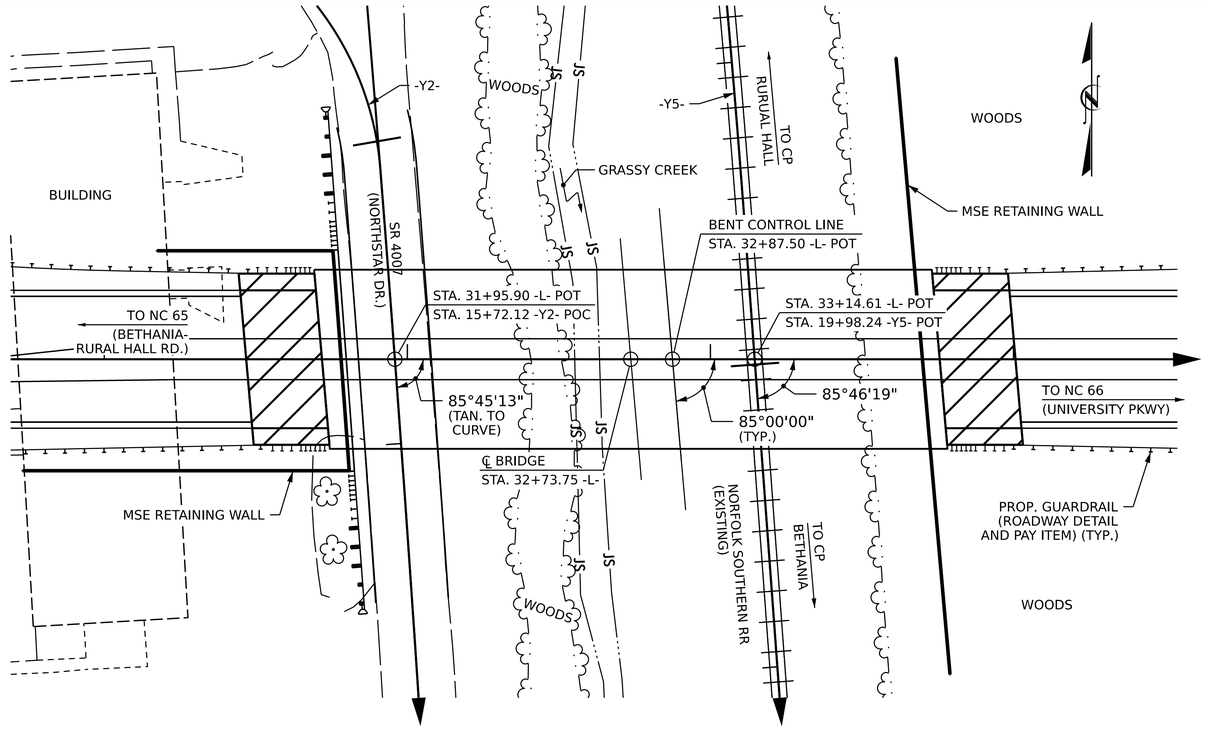

FOR UTILITY INFORMATION, SEE UTILITY PLANS AND SPECIAL PROVISIONS.

LOCATION SKETCH

HYDRAULIC DATA:

DESIGN DISCHARGE	= 990 CFS
FREQUENCY OF DESIGN FLOOD	= 25 YEAR
DESIGN HIGH WATER ELEVATION	= 852.2
DRAINAGE AREA	= 1.34 SQ. MI.
BASE DISCHARGE (Q 100)	= 1,470 CFS
BASE HIGH WATER ELEVATION	= 853.8

OVERTOPPING FLOOD DATA:

OVERTOPPING DISCHARGE	= 44,000 CFS
FREQUENCY OF OVERTOPPING FLOOD	= 500+ YEAR
OVERTOPPING FLOOD ELEVATION	= 885.6 *

* OT OCCURS AT -L- STA. 29+40 RT. DUE TO SUPERELEVATION.

NOTES:

ASSUMED LIVE LOAD = HL-93 OR ALTERNATE LOADING.

THIS BRIDGE HAS BEEN DESIGNED IN ACCORDANCE WITH THE REQUIREMENTS OF THE AASHTO LRFD BRIDGE DESIGN SPECIFICATIONS.

THIS BRIDGE IS LOCATED IN SEISMIC ZONE 1.

FOR OTHER DESIGN DATA AND GENERAL NOTES, SEE SHEET SN.

FOR SUBMITTAL OF WORKING DRAWINGS, SEE SPECIAL PROVISIONS.

FOR FALSEWORK AND FORMWORK, SEE SPECIAL PROVISIONS.

FOR CRANE SAFETY, SEE SPECIAL PROVISIONS.

FOR GROUT FOR STRUCTURES, SEE SPECIAL PROVISIONS.

FOR MAINTENANCE AND PROTECTION OF TRAFFIC BENEATH PROPOSED STRUCTURE, SEE SPECIAL PROVISIONS.

REMOVABLE FORMS MAY BE USED IN LIEU OF METAL STAY-IN-PLACE FORMS IN ACCORDANCE WITH ARTICLE 420-3 OF THE STANDARD SPECIFICATIONS.

THE RAILROAD TRACK TOP OF RAIL ELEVATIONS ON THE PLANS ARE FROM THE BEST INFORMATION AVAILABLE. PRIOR TO BEGINNING BRIDGE CONSTRUCTION, VERIFY THE TOP OF RAIL ELEVATIONS AND REPORT ANY VARIATIONS TO THE ENGINEER. ANY PLAN REVISIONS NECESSARY TO ACHIEVE THE REQUIRED MINIMUM CLEARANCE WILL BE PROVIDED BY THE DEPARTMENT.

NEEDLE BEAMS WILL NOT BE ALLOWED UNLESS OTHERWISE CALLED FOR ON THE PLANS OR APPROVED BY THE ENGINEER.

THE CLASS AA CONCRETE IN THE BRIDGE DECK SHALL CONTAIN FLY ASH OR GROUND GRANULATED BLAST FURNACE SLAG AT THE SUBSTITUTION RATE SPECIFIED IN ARTICLE 1024-1 AND IN ACCORDANCE WITH ARTICLES 1024-5 AND 1024-6 OF THE STANDARD SPECIFICATIONS. NO PAYMENT WILL BE MADE FOR THIS SUBSTITUTION AS IT IS CONSIDERED INCIDENTAL TO THE COST OF THE REINFORCED CONCRETE DECK SLAB.

FOR EROSION CONTROL MEASURES, SEE EROSION CONTROL PLANS.

THIS STRUCTURE HAS BEEN DESIGNED IN ACCORDANCE WITH "HEC 18-EVALUATING SCOUR AT BRIDGES."

TOTAL BILL OF MATERIAL

	4'-0" DIA DRILLED PIERS IN SOIL	4'-0" DIA DRILLED PIERS NOT IN SOIL	PERMANENT STEEL CASING FOR 4'-0" DIA DRILLED PIER	REINFORCED CONCRETE DECK SLAB	GROOVING BRIDGE FLOORS	CLASS A CONCRETE	BRIDGE APPROACH SLABS STA. 32+73.75 -L-	REINFORCING STEEL	SPIRAL COLUMN REINFORCING STEEL	FIB 54" PRESTRESSED CONCRETE GIRDERS	
	LIN. FT.	LIN. FT.	LIN. FT.	SQ. FT.	SQ. FT.	CU. YDS.	LUMP SUM	LBS.	LBS.	NO.	LIN. FT.
SUPERSTRUCTURE				12,018	11,729		LUMP SUM			12	1213.0
END BENT 1						59.0		8,091			
BENT 1	42	72	39			85.1		22,004	4,861		
END BENT 2						56.9		7,746			
TOTAL	42	72	39	12,018	11,729	201.0	LUMP SUM	37,841	4,861	12	1213.0

	PILE DRIVING EQUIPMENT SETUP FOR HP 14 X 89 STEEL PILES	HP 14 X 89 STEEL PILES		STEEL PILE POINTS	THREE BAR METAL RAIL	122" CHAIN LINK FENCE	4" SLOPE PROTECTION	ELASTOMERIC BEARINGS	FOAM JOINT SEALS
	EA.	NO.	LIN. FT.	EA.	LIN. FT.	LIN. FT.	SQ. YDS.	LUMP SUM	LUMP SUM
SUPERSTRUCTURE					391.5	403		LUMP SUM	LUMP SUM
END BENT 1	10	10	425	10			24		
BENT 1									
END BENT 2	8	8	500	8			63		
TOTAL	18	18	925	18	391.5	403	87	LUMP SUM	LUMP SUM

PROJECT NO. U-5899
FORSYTH COUNTY
STATION: 32+73.75 -L-

SHEET 4 OF 4

PREPARED BY
MOTT MACDONALD
7621 Parkway Rd., Suite 115
Fuquay-Varina, NC 27526
(919) 552-2353
License No. F-0669
www.mottmac.com

NORTH CAROLINA PROFESSIONAL SEAL 039313 ENGINEER JUSTINA M. ROBINSON
DocuSigned by: Justina M. Robinson
31-Mar-2023

STATE OF NORTH CAROLINA
DEPARTMENT OF TRANSPORTATION
RALEIGH

GENERAL DRAWING

BRIDGE ON SR 3955 (FORUM PKWY.) OVER SR 4007 (NORTHSTAR DR.), GRASSY CREEK, & NORFOLK SOUTHERN RAILROAD BETWEEN NC 65 AND NC 66

REVISIONS						SHEET NO.
NO.	BY:	DATE:	NO.	BY:	DATE:	S01-04
1			3			TOTAL SHEETS
2			4			36

DRAWN BY : L. L. BLANKENSHIP DATE : 10-2023
CHECKED BY : J. M. ROBINSON DATE : 10-2023
DESIGN ENGINEER OF RECORD: R. L. DICKE DATE : 10-2023

DOCUMENT NOT CONSIDERED FINAL UNLESS ALL SIGNATURES COMPLETED

1/29/2025 5:34:55 PM
C:\Users\kring\mmm-onl.r-onsit\wil57077\d0172438\401_007_U-5899_SMU_GD_S01-04_330747.dgn
WIL57077

Docusign Envelope ID: 16E2D990-30DC-440F-9F27-F28A276FE772

8/26/21

LOAD AND RESISTANCE FACTOR RATING (LRFR) SUMMARY FOR PRESTRESSED CONCRETE GIRDERS

LOAD TYPE		VEHICLE	WEIGHT (W) (TONS)	CONTROLLING LOAD RATING (#)	MINIMUM RATING FACTORS (RF)	TONS = W x RF	STRENGTH I LIMIT STATE											SERVICE III LIMIT STATE						COMMENT NUMBER
								MOMENT					SHEAR						MOMENT					
							LIVE-LOAD FACTORS (γ_{LL})	DISTRIBUTION FACTORS (DF)	RATING FACTOR	SPAN	GIRDER LOCATION	DISTANCE FROM LEFT END OF SPAN (ft)	DISTRIBUTION FACTORS (DF)	RATING FACTOR	SPAN	GIRDER LOCATION	DISTANCE FROM LEFT END OF SPAN (ft)	LIVE-LOAD FACTORS (γ_{LL})	DISTRIBUTION FACTORS (DF)	RATING FACTOR	SPAN	GIRDER LOCATION	DISTANCE FROM LEFT END OF SPAN (ft)	
DESIGN LOAD		HL-93 (INVENTORY)	N/A	1	1.05	--	1.75	0.855	1.44	A	EL	56.6	1.002	1.16	A	I	33.7	0.80	0.782	1.05	A	I	56.6	
		HL-93 (OPERATING)	N/A		1.79	--	1.35	0.855	1.87	A	EL	56.6	1.002	1.79	A	I	10.8	N/A	--	--	--	--	--	
		HS-20 (INVENTORY)	36.000	2	1.51	54.360	1.75	0.855	2.08	A	EL	56.6	1.002	1.86	A	I	22.2	0.80	0.782	1.51	A	I	56.6	
		HS-20 (OPERATING)	36.000		2.46	88.560	1.35	0.855	2.69	A	EL	56.6	1.002	2.46	A	I	22.2	N/A	--	--	--	--	--	
LEGAL LOAD	SINGLE VEHICLE (SV)	SNSH	13.500		3.64	49.140	1.40	0.855	6.26	A	EL	56.6	1.002	6.07	A	I	22.2	0.80	0.782	3.64	A	I	56.6	
		SNGARBS2	20.000		2.61	52.200	1.40	0.855	4.49	A	EL	56.6	1.002	4.20	A	I	22.2	0.80	0.782	2.61	A	I	56.6	
		SNAGRIS2	22.000		2.43	53.460	1.40	0.855	4.18	A	EL	56.6	1.002	3.86	A	I	22.2	0.80	0.782	2.43	A	I	56.6	
		SNCOTTS3	27.250		1.81	49.323	1.40	0.855	3.11	A	EL	56.6	1.002	2.94	A	I	22.2	0.80	0.782	1.81	A	I	56.6	
		SNAGGRS4	34.925		1.47	51.340	1.40	0.855	2.53	A	EL	56.6	1.002	2.37	A	I	22.2	0.80	0.782	1.47	A	I	56.6	
		SNS5A	35.550		1.44	51.192	1.40	0.855	2.48	A	EL	56.6	1.002	2.37	A	I	22.2	0.80	0.782	1.44	A	I	56.6	
		SNS6A	39.950		1.31	52.335	1.40	0.855	2.25	A	EL	56.6	1.002	2.13	A	I	22.2	0.80	0.782	1.31	A	I	56.6	
		SNS7B	42.000		1.24	52.080	1.40	0.855	2.14	A	EL	56.6	1.002	2.07	A	I	22.2	0.80	0.782	1.24	A	I	56.6	
	TRUCK TRACTOR SEMI-TRAILER (TTST)	TNAGRIT3	33.000		1.59	52.470	1.40	0.855	2.73	A	EL	56.6	1.002	2.59	A	I	22.2	0.80	0.782	1.59	A	I	56.6	
		TNT4A	33.075		1.59	52.589	1.40	0.855	2.74	A	EL	56.6	1.002	2.53	A	I	22.2	0.80	0.782	1.59	A	I	56.6	
		TNT6A	41.600		1.29	53.664	1.40	0.855	2.21	A	EL	56.6	1.002	2.18	A	I	22.2	0.80	0.782	1.29	A	I	56.6	
		TNT7A	42.000		1.29	54.180	1.40	0.855	2.21	A	EL	56.6	1.002	2.14	A	I	22.2	0.80	0.782	1.29	A	I	56.6	
		TNT7B	42.000		1.31	55.020	1.40	0.855	2.25	A	EL	56.6	1.002	2.04	A	I	22.2	0.80	0.782	1.31	A	I	56.6	
		TNAGRIT4	43.000		1.26	54.180	1.40	0.855	2.17	A	EL	56.6	1.002	1.97	A	I	22.2	0.80	0.782	1.26	A	I	56.6	
		TNAGT5A	45.000		1.20	54.000	1.40	0.855	2.06	A	EL	56.6	1.002	1.93	A	I	22.2	0.80	0.782	1.20	A	I	56.6	
		TNAGT5B	45.000	3	1.19	53.550	1.40	0.855	2.04	A	EL	56.6	1.002	1.87	A	I	22.2	0.80	0.782	1.19	A	I	56.6	
EMERGENCY VEHICLE (EV)		EV2	28.750		1.83	52.613	1.30	0.855	3.15	A	EL	56.6	1.002	2.89	A	I	22.2	0.80	0.782	1.83	A	I	56.6	
		EV3	43.000	4	1.21	52.030	1.30	0.855	2.08	A	EL	56.6	1.002	1.89	A	I	22.2	0.80	0.782	1.21	A	I	56.6	

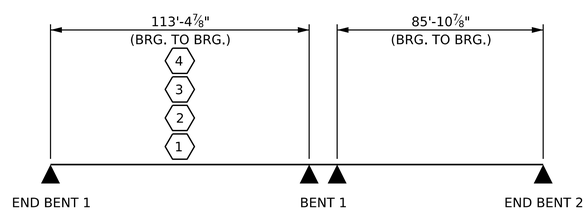

LRFR SUMMARY

LOAD FACTORS:

DESIGN LOAD RATING FACTORS	LIMIT STATE	γ_{DC}	γ_{DW}
	STRENGTH I	1.25	1.50
	SERVICE III	1.00	1.00

NOTES:

MINIMUM RATING FACTORS ARE BASED ON THE STRENGTH I AND SERVICE III LIMIT STATES.

ALLOWABLE STRESSES FOR SERVICE III LIMIT STATE ARE AS REQUIRED FOR DESIGN.

COMMENTS:

1.
2.
3.
4.

#	CONTROLLING LOAD RATING
1	DESIGN LOAD RATING (HL-93)
2	DESIGN LOAD RATING (HS-20)
3	LEGAL LOAD RATING * *
4	EMERGENCY VEHICLE LOAD RATING * *

* * SEE CHART FOR VEHICLE TYPE

GIRDER LOCATION

I - INTERIOR GIRDER
EL - EXTERIOR LEFT GIRDER
ER - EXTERIOR RIGHT GIRDER

PROJECT NO. U-5899
FORSYTH COUNTY
STATION: 32+73.75 -L-

PREPARED BY
MOTT MACDONALD
7401 Parkway Rd., Suite 115
Fuquay-Varina, NC 27526
(919) 552-2353
License No. F-0669
www.mottmac.com

NORTH CAROLINA PROFESSIONAL SEAL 039313 ENGINEER JOSHUA M. ROBINSON
31-Mar-2023

STATE OF NORTH CAROLINA
DEPARTMENT OF TRANSPORTATION
RALEIGH

LRFR SUMMARY FOR PRESTRESSED CONCRETE GIRDERS
(NON-INTERSTATE TRAFFIC)

REVISIONS						SHEET NO.
NO.	BY:	DATE:	NO.	BY:	DATE:	S01-05
1			3			TOTAL SHEETS
2			4			36

DOCUMENT NOT CONSIDERED FINAL UNLESS ALL SIGNATURES COMPLETED

DRAWN BY :	N. K. KAVANI	DATE :	10-2023
CHECKED BY :	J. M. ROBINSON	DATE :	10-2023
DESIGN ENGINEER OF RECORD:	R. L. DICKE	DATE :	10-2023

1/27/2025 6:03:32 PM
R:\Structures\Bridge\01_330747\Plans\401_009_U-5899_SMU_LRFR_S01-05_330747.dgn
WILS7077

Docusign Envelope ID: 16E2D990-30DC-440F-9F27-F28A276FE772

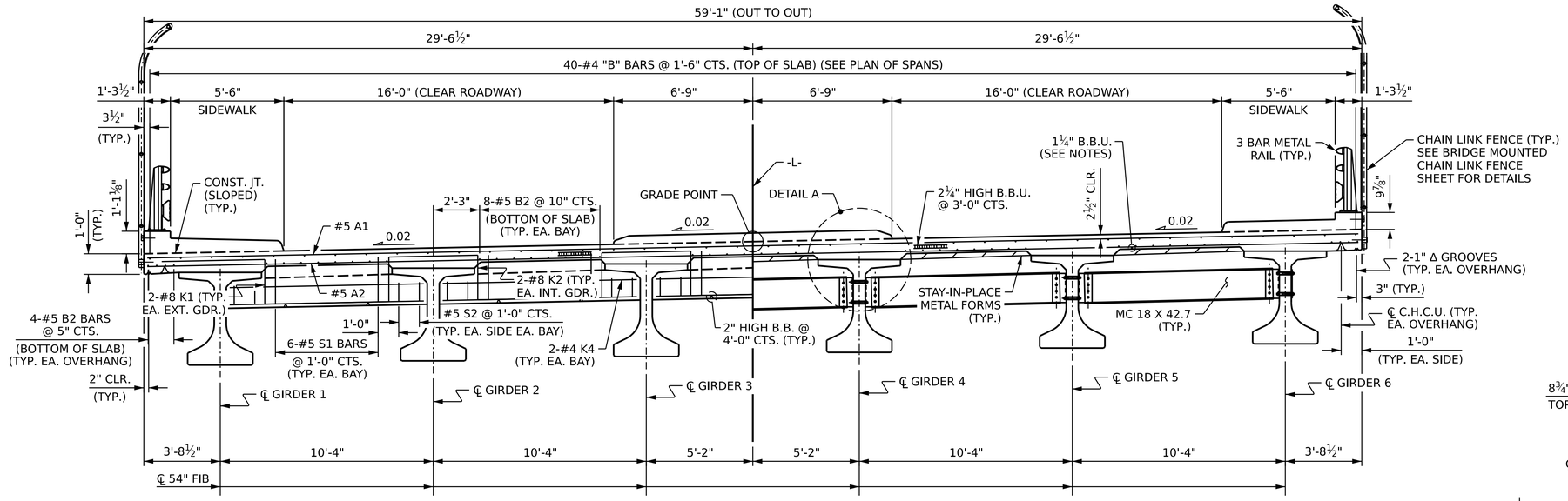

HALF TYPICAL SECTION

SHOWING END BENT DIAPHRAGMS

HALF TYPICAL SECTION

SHOWING INTERMEDIATE DIAPHRAGMS

TYPICAL SECTION

NOTES:

FOR NOTES, SEE SHEET 2 OF 2.

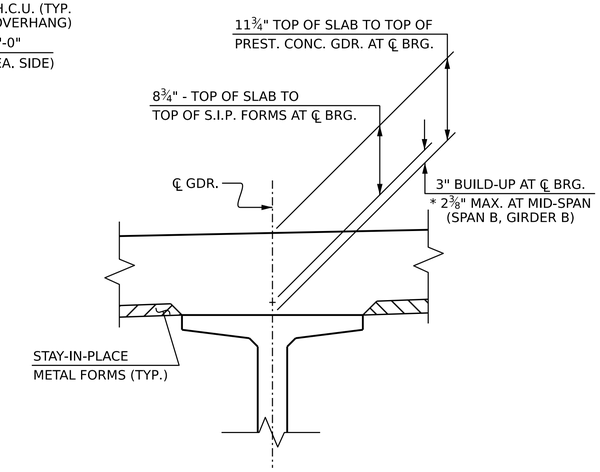

DETAIL A

* BASED ON PREDICTED FINAL CAMBER AND THEORETICAL GRADE LINE ELEVATIONS.

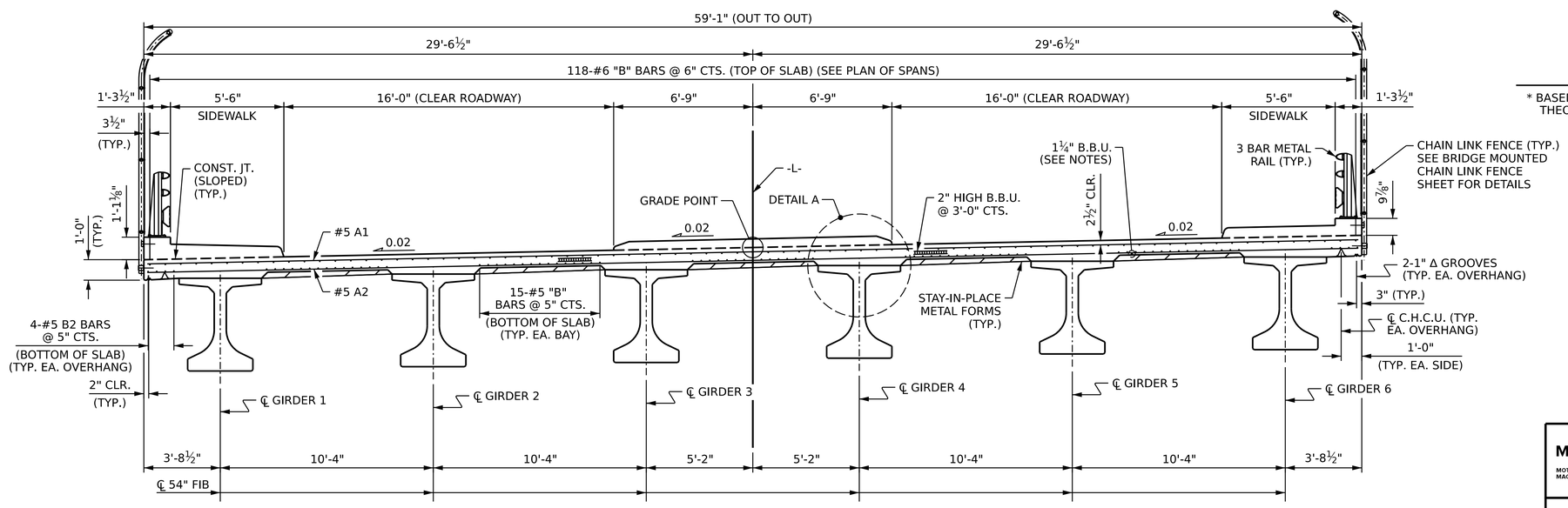

TYPICAL SECTION

SHOWING LINK SLAB SECTION AT BENT

PROJECT NO. U-5899

FORSYTH COUNTY

STATION: 32+73.75 -L-

SHEET 1 OF 2

PREPARED BY

MOTT MACDONALD

7601 Parkway Rd., Suite 115
Fuquay-Varina, NC 27526
(919) 552-2253
License No. F-0669
www.mottmac.com

NORTH CAROLINA PROFESSIONAL SEAL 039313 ENGINEER JOHN M. ROBINSON

DocuSigned by: John M. Robinson
31-Mar-2025

STATE OF NORTH CAROLINA
DEPARTMENT OF TRANSPORTATION
RALEIGH

SUPERSTRUCTURE

TYPICAL SECTION

REVISIONS							SHEET NO.
NO.	BY:	DATE:	NO.	BY:	DATE:		S01-06
1			3				TOTAL SHEETS
2			4				36

DOCUMENT NOT CONSIDERED FINAL UNLESS ALL SIGNATURES COMPLETED

DRAWN BY :	L. L. BLANKENSHIP	DATE :	9-2023
CHECKED BY :	J. M. ROBINSON	DATE :	10-2023
DESIGN ENGINEER OF RECORD:	R. L. DICKE	DATE :	10-2023

1/27/2025 6:03:32 PM
R:\Structures\BRG_01_330747\Plans\401_011_U-5899_SMU_TS_S01-06_330747.dgn
W11570T7

Docusign Envelope ID: 16E2D990-30DC-440F-9F27-F28A276FE772

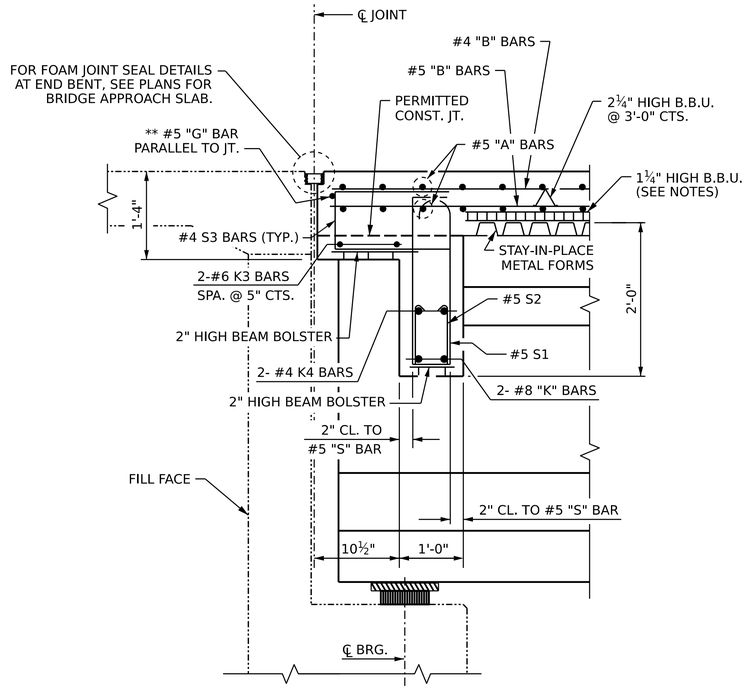

SECTION THRU END BENT DIAPHRAGM

** #5 "G" BAR MAY BE SHIFTED SLIGHTLY, AS NECESSARY, TO CLEAR REINFORCING STEEL AND STIRRUPS.

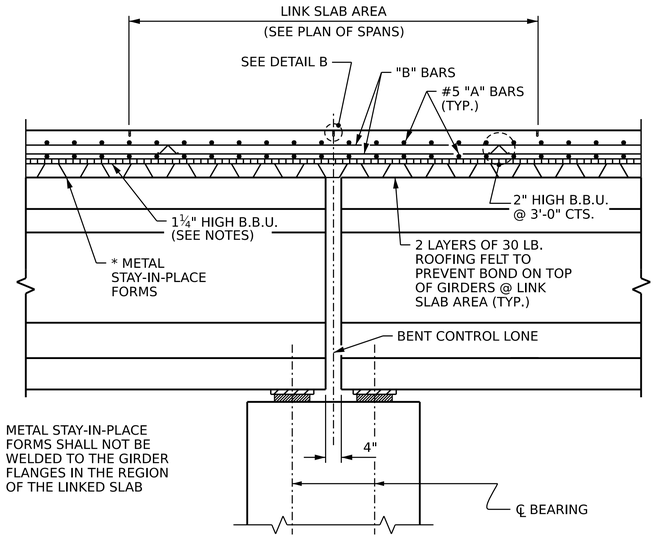

* METAL STAY-IN-PLACE FORMS SHALL NOT BE WELDED TO THE GIRDER FLANGES IN THE REGION OF THE LINKED SLAB

SECTION @ LINK SLAB

NOTES:

PROVIDE 1¼" HIGH BEAM BOLSTERS UPPER AT 4'-0" CTS. ATOP THE METAL STAY-IN-PLACE FORMS TO SUPPORT THE BOTTOM MAT OF "A'' BARS. WHEN USING REMOVABLE FORMS, PROVIDE CONTINUOUS HIGH CHAIRS FOR METAL DECK (C.H.C.M) @ 4'-0" CTS. WITH A HEIGHT TO SUPPORT THE BOTTOM MAT OF "A'' BARS A CLEAR DISTANCE OF 2½" ABOVE THE REMOVABLE FORM.

LONGITUDINAL STEEL MAY BE SHIFTED SLIGHTLY, AS NECESSARY, TO AVOID INTERFERENCE WITH STIRRUPS IN PRESTRESSED CONCRETE GIRDERS.

PREVIOUSLY CAST CONCRETE IN A CONTINUOUS UNIT SHALL HAVE ATTAINED A MINIMUM COMPRESSIVE STRENGTH OF 3,000 PSI BEFORE ADDITIONAL CONCRETE IS CAST IN THE UNIT.

CONCRETE SIDEWALK IN A CONTINUOUS UNIT SHALL NOT BE CAST UNTIL ALL SLAB CONCRETE IN THE UNIT HAS BEEN CAST AND HAS REACHED A MINIMUM COMPRESSIVE STRENGTH OF 3,000 PSI.

FOR INTERMEDIATE STEEL DIAPHRAGMS DETAILS, SEE "INTERMEDIATE STEEL DIAPHRAGMS FOR 54" FIB" SHEET.

METAL STAY-IN-PLACE FORMS SHALL NOT BE WELDED TO THE SUPPORT ANGLES WITHIN THE LINK SLAB AREAS. SEE "PLAN OF SPANS'' SHEETS FOR LOCATION.

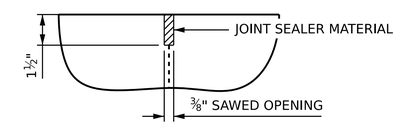

DETAIL B

A 1½" DEEP ⅜" WIDE CONTRACTION JOINT AT BENT CONROL LINE SHALL BE SAWN WITHIN 24 HOURS OF POURING THE DECK. THE JOINT SHALL BE FILLED WITH JOINT SEALER MATERIAL. THE JOINT SEALER MATERIAL SHALL CONFORM TO THE REQUIREMENTS OF SECTION 1028-3 OF THE STANDARD SPECIFICATIONS.

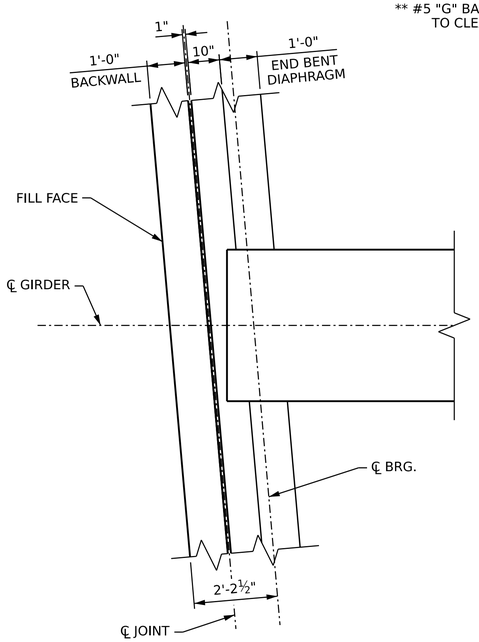

PLAN VIEW OF DIAPHRAGM @ END BENT 1

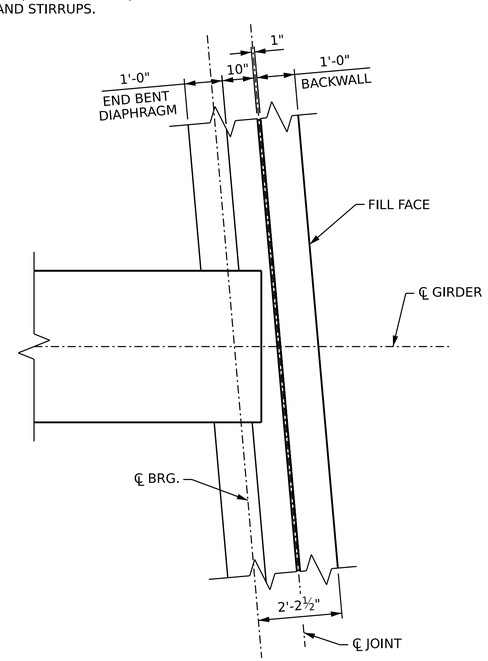

PLAN VIEW OF DIAPHRAGM @ END BENT 2

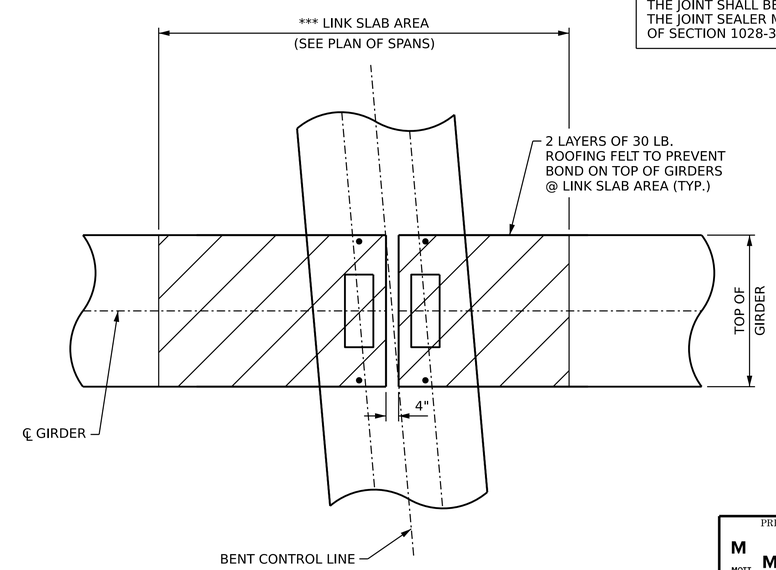

PLAN @ BENT

*** THE TOP OF THE GIRDER IN THE LINK SLAB AREA SHALL BE SMOOTH (NOT RAKED) AND FREE OF STIRRUPS, ANCHOR STUDS, DECK FORMWORK ATTACHMENTS, AND OVERHANG FALSEWORK/FORMWORK ATTACHMENTS.

PROJECT NO. U-5899
FORSYTH COUNTY
STATION: 32+73.75 -L-

SHEET 2 OF 2

PREPARED BY
MOTT MACDONALD
7621 Parfey Rd., Suite 115
Fuquay-Varina, NC 27526
(919) 552-2353
License No. F-0669
www.mottmac.com

NORTH CAROLINA PROFESSIONAL SEAL 039313 ENGINEER JOSHUA M. ROBINSON
DocuSigned by: Joshua M. Robinson
31-Mar-2023

STATE OF NORTH CAROLINA
DEPARTMENT OF TRANSPORTATION
RALEIGH

SUPERSTRUCTURE

TYPICAL SECTION DETAILS

REVISIONS						SHEET NO.
NO.	BY:	DATE:	NO.	BY:	DATE:	S01-07
1			3			TOTAL SHEETS
2			4			36

DRAWN BY : L. L. BLANKENSHIP DATE : 10-2023
CHECKED BY : J. M. ROBINSON DATE : 10-2023
DESIGN ENGINEER OF RECORD: R. L. DICKE DATE : 10-2023

DOCUMENT NOT CONSIDERED FINAL UNLESS ALL SIGNATURES COMPLETED

I:\272025 60833 PM
R:\Structures\BRG_01_330747\Plans\401_013_U-5899_SMU_TS_S01-07_330747.dgn
WIL5707T

Docusign Envelope ID: 16E2D990-30DC-440F-9F27-F28A276FE772

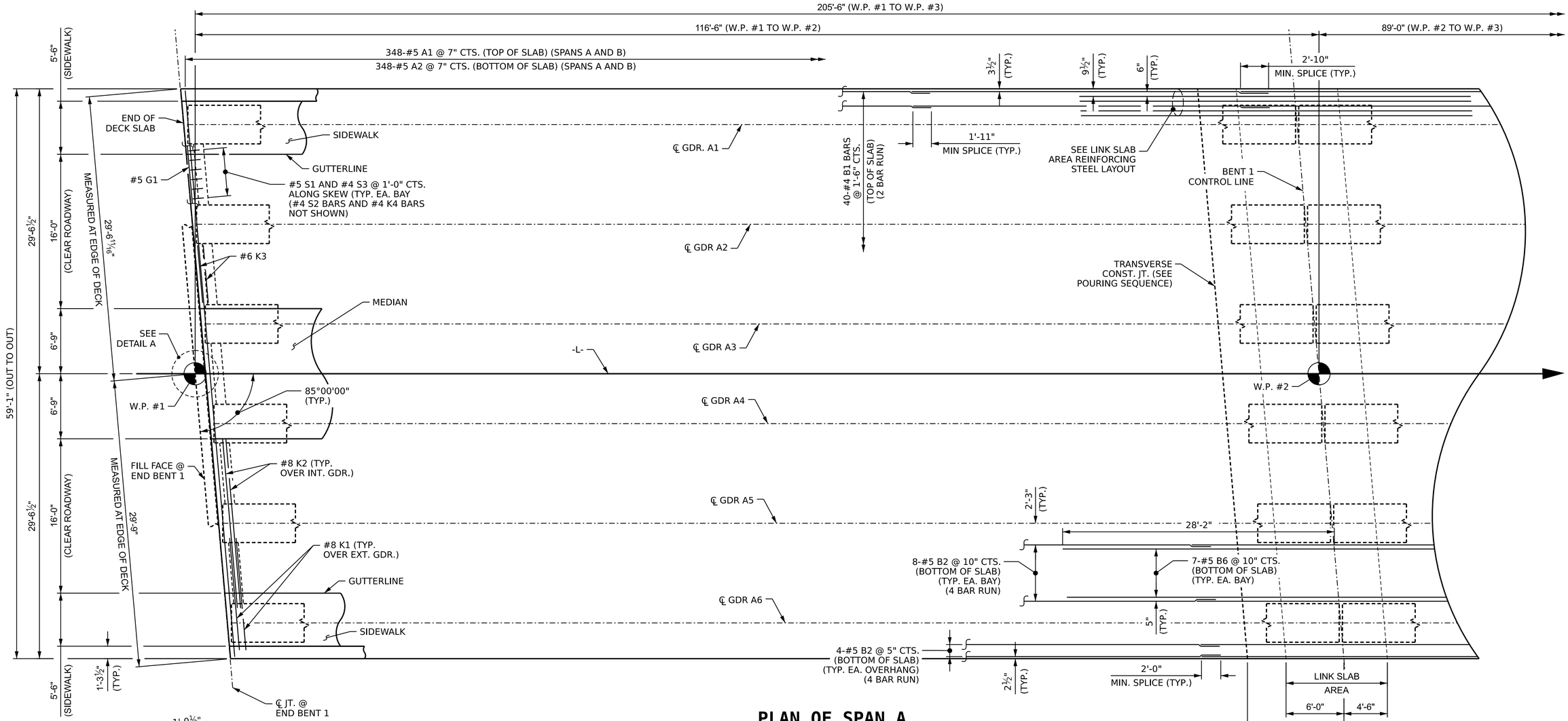

PLAN OF SPAN A

FOR POURING SEQUENCE AND TRANSVERSE CONSTRUCTION JOINT DETAIL, SEE "SUPERSTRUCTURE BILL OF MATERIAL" SHEET.

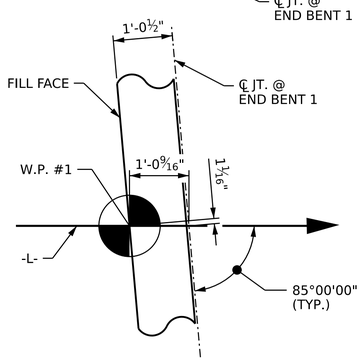

DETAIL A

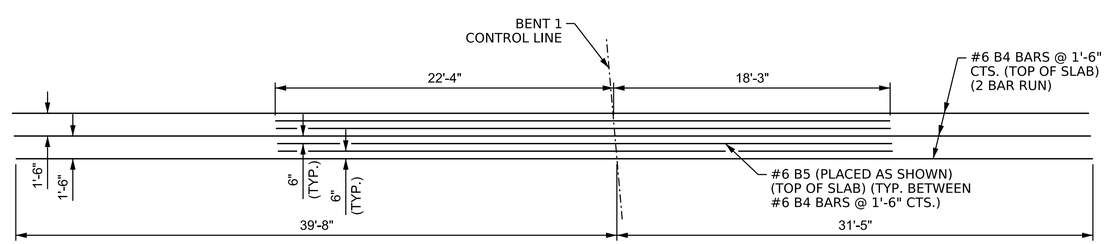

LINK SLAB AREA REINFORCING STEEL LAYOUT

TOP OF SLAB "B" BARS SHOWN
BAR SPLICES NOT SHOWN

PROJECT NO. U-5899
FORSYTH COUNTY
STATION: 32+73.75 -L-

SHEET 1 OF 2

PREPARED BY
MOTT MACDONALD
7621 Parkway Rd., Suite 115
Fuquay-Varina, NC 27526
(919) 552-2253
License No. F-0649
www.mottmac.com

NORTH CAROLINA PROFESSIONAL SEAL 039313 ENGINEER
DocuSigned by: Kathryn M. Robinson
31-Mar-2025

STATE OF NORTH CAROLINA
DEPARTMENT OF TRANSPORTATION
RALEIGH

SUPERSTRUCTURE

PLAN OF SPAN A

REVISIONS							SHEET NO.
NO.	BY:	DATE:	NO.	BY:	DATE:		S01-08
1			3				TOTAL SHEETS
2			4				36

DOCUMENT NOT CONSIDERED FINAL UNLESS ALL SIGNATURES COMPLETED

DRAWN BY :	L. L. BLANKENSHIP	DATE :	8-2023
CHECKED BY :	J. M. ROBINSON	DATE :	10-2023
DESIGN ENGINEER OF RECORD:	R. L. DICKE	DATE :	10-2023

1/27/2025 6:03:34 PM
R:\Structures\BRG_01_330747\Plans\401_015_U-5899_SMU_S_S01-08_330747.dgn
WILS7077

Docusign Envelope ID: 16E2D990-30DC-440F-9F27-F28A276FE772

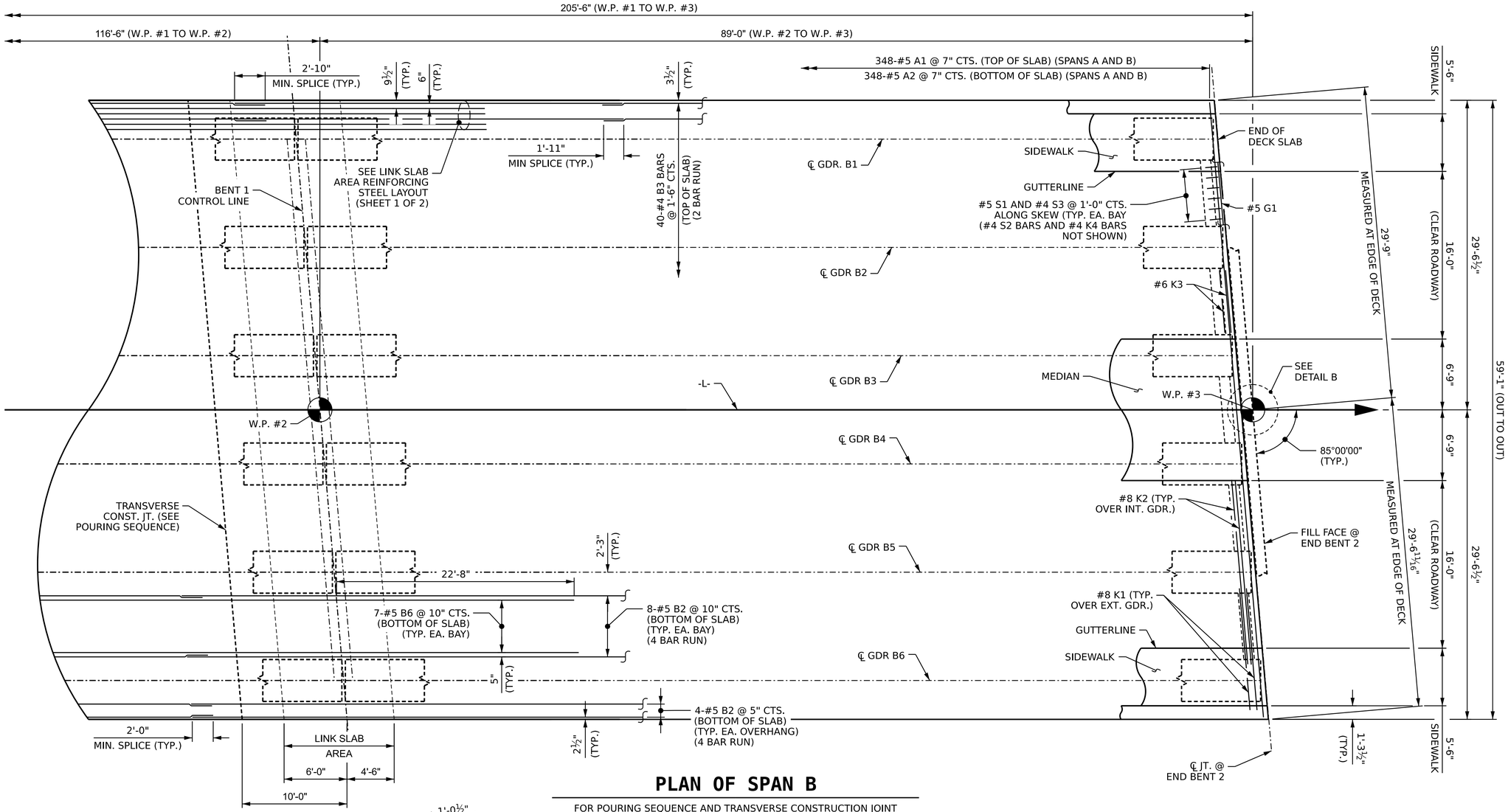

PLAN OF SPAN B

FOR POURING SEQUENCE AND TRANSVERSE CONSTRUCTION JOINT DETAIL, SEE "SUPERSTRUCTURE BILL OF MATERIAL" SHEET.

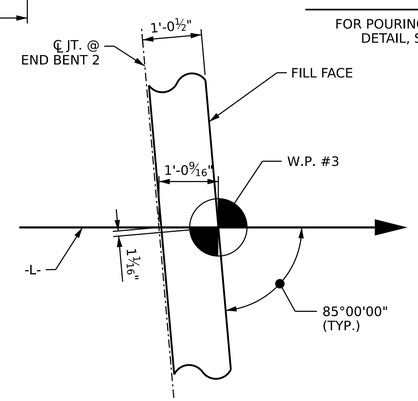

DETAIL B

PROJECT NO. U-5899

FORSYTH COUNTY

STATION: 32+73.75 -L-

SHEET 2 OF 2

PREPARED BY

MOTT MACDONALD

7621 Parfey Rd., Suite 115
Fuquay-Varina, NC 27526
(919) 552-2253
License No. F-0669
www.mottmac.com

NORTH CAROLINA PROFESSIONAL SEAL 039313 ENGINEER JOSHUA M. ROBINSON

DocuSigned by:
31-Mar-2023

STATE OF NORTH CAROLINA
DEPARTMENT OF TRANSPORTATION
RALEIGH

SUPERSTRUCTURE

PLAN OF SPAN B

REVISIONS							SHEET NO.
NO.	BY:	DATE:	NO.	BY:	DATE:		S01-09
1			3				TOTAL SHEETS
2			4				36

DOCUMENT NOT CONSIDERED FINAL UNLESS ALL SIGNATURES COMPLETED

DRAWN BY :	L. L. BLANKENSHIP	DATE :	10-2023
CHECKED BY :	J. M. ROBINSON	DATE :	10-2023
DESIGN ENGINEER OF RECORD:	R. L. DICKE	DATE :	10-2023

1/27/2025 6:03:34 PM
R:\Structures\BRG_01_330747\Plans\401_017_U-5899_SMU_S_S01-09_330747.dgn
W157077

Docusign Envelope ID: 16E2D990-30DC-440F-9F27-F28A276FE772

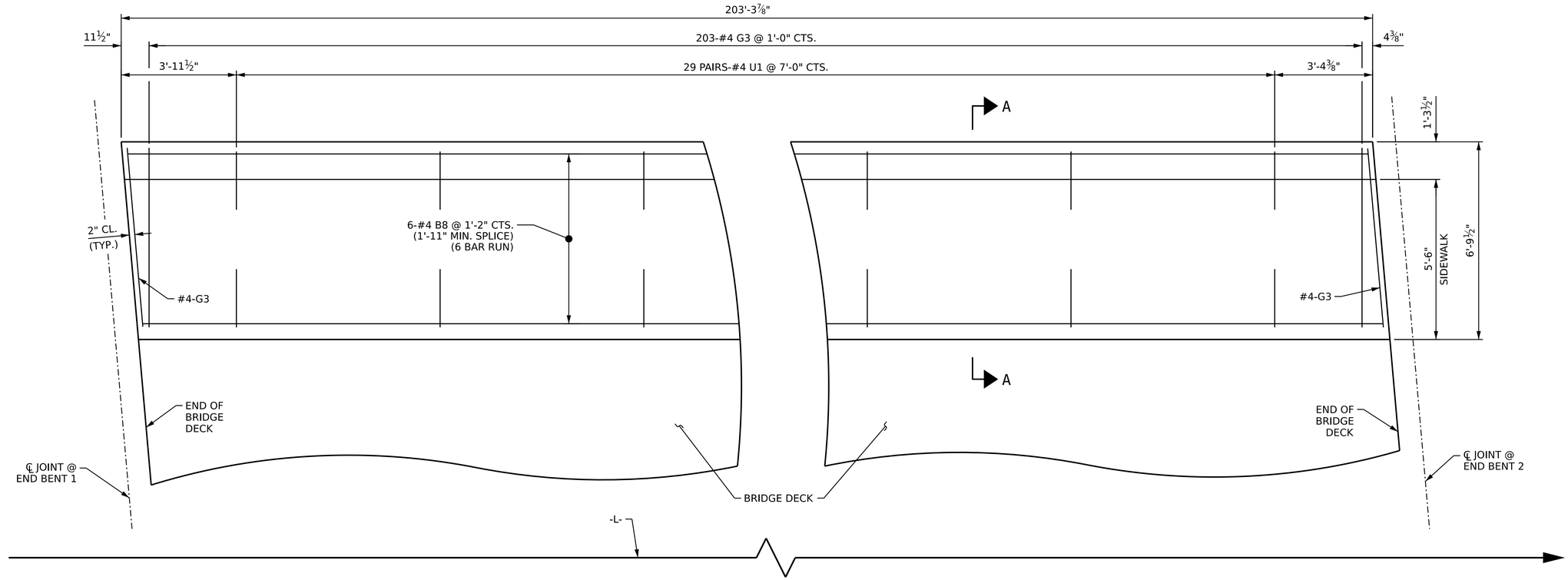

PLAN OF SIDEWALK

LEFT SIDE SHOWN, RIGHT SIDE SIMILAR

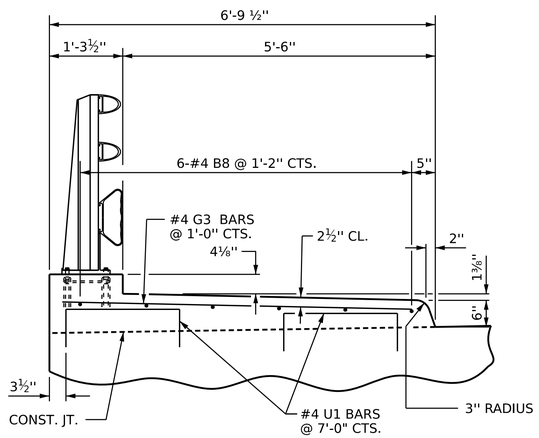

SECTION A-A

NOTES:

GROOVED CONTRACTION JOINTS, ½" IN DEPTH, SHALL BE TOOLED IN ALL EXPOSED FACES OF SIDEWALKS IN ACCORDANCE WITH ARTICLE 825-10(B) OF THE STANDARD SPECIFICATIONS. THE CONTRACTION JOINTS SHALL BE LOCATED AT A SPACING OF 8 FEET TO 10 FEET BETWEEN EXPANSION JOINTS. NO CONTRACTION JOINTS WILL BE REQUIRED FOR SEGMENTS LESS THAN 10 FEET IN LENGTH.

THE SIDEWALKS IN THE CONTINUOUS UNIT SHALL NOT BE CAST UNTIL ALL SLAB CONCRETE IN THE UNIT HAS BEEN CAST AND HAS REACHED A MINIMUM COMPRESSIVE STRENGTH OF 3000 PSI.

ALL REINFORCING STEEL FOR THE SIDEWALKS SHALL BE EPOXY COATED.

PAYMENT FOR THE SIDEWALKS LOCATED ON BRIDGE DECK SHALL BE INCLUDED IN PAY ITEMS FOR "REINFORCED CONCRETE DECK SLAB". FOR SIDEWALK QUANTITIES LOCATED ON BRIDGE DECK, SEE SUPERSTRUCTURE BILL OF MATERIAL SHEET.

PAYMENT FOR SIDEWALKS LOCATED ON APPROACH SLABS SHALL BE INCLUDED IN PAY ITEM FOR "BRIDGE APPROACH SLABS". FOR SIDEWALK QUANTITIES LOCATED ON APPROACH SLABS, SEE APPROACH SLAB SHEET.

THE #4 "U" BARS MAY BE PUSHED INTO GREEN CONCRETE AFTER SPAN HAS BEEN SCREEDED OFF.

PROJECT NO. U-5899
FORSYTH COUNTY
STATION: 32+73.75 -L-

PREPARED BY
MOTT MACDONALD
7621 Parfey Rd., Suite 115
Fuquay-Varina, NC 27526
(919) 552-2353
License No. F-0669
www.mottmac.com

NORTH CAROLINA PROFESSIONAL SEAL 039313 ENGINEER JOHN M. ROBINSON
DocuSigned by: 4E2D1A4A8E7E4D0...
31-Mar-2025

STATE OF NORTH CAROLINA
DEPARTMENT OF TRANSPORTATION
RALEIGH

SUPERSTRUCTURE

SIDEWALK DETAILS

REVISIONS						SHEET NO.
NO.	BY:	DATE:	NO.	BY:	DATE:	S01-10
1			3			TOTAL SHEETS
2			4			36

DOCUMENT NOT CONSIDERED FINAL UNLESS ALL SIGNATURES COMPLETED

DRAWN BY :	L. L. BLANKENSHIP	DATE :	10-2023
CHECKED BY :	J. M. ROBINSON	DATE :	10-2023
DESIGN ENGINEER OF RECORD:	R. L. DICKE	DATE :	10-2023

1/27/2025 6:03:35 PM
R:\Structures\BRG_01_330747\Plans\401_019_U-5899_SMU_SW_S01-10_330747.dgn
W115707T

Docusign Envelope ID: 16E2D990-30DC-440F-9F27-F28A276FE772

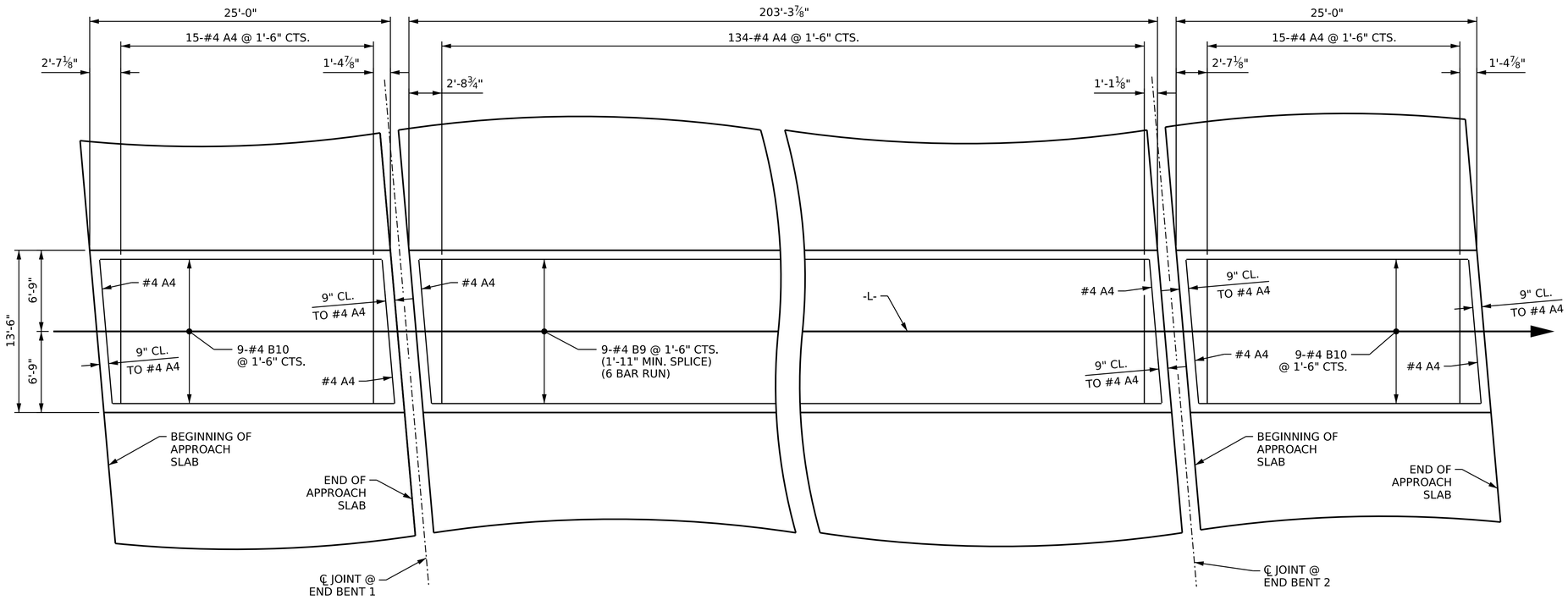

PLAN OF CONCRETE MEDIAN

NOTES:

THE CONCRETE MEDIAN ON A CONTINUOUS UNIT SHALL NOT BE CAST UNTIL ALL CONCRETE IN THE UNIT HAS BEEN CAST AND HAS REACHED A MINIMUM COMPRESSIVE STRENGTH OF 3,000 PSI.

PAYMENT FOR MEDIAN LOCATED ON BRIDGE DECK SHALL BE INCLUDED IN PAY ITEMS FOR "REINFORCED CONCRETE DECK SLAB". FOR MEDIAN QUANTITIES LOCATED ON BRIDGE DECK, SEE SUPERSTRUCTURE BILL OF MATERIAL SHEET.

PAYMENT FOR MEDIAN LOCATED ON APPROACH SLABS SHALL BE INCLUDED IN PAY ITEM FOR "BRIDGE APPROACH SLABS". FOR MEDIAN QUANTITIES LOCATED ON APPROACH SLABS, SEE APPROACH SLAB SHEET.

ALL REINFORCING STEEL IN CONCRETE MEDIAN SHALL BE EPOXY COATED.

GROOVED CONTRACTION JOINTS, ½" IN DEPTH, SHALL BE TOOLED IN ALL EXPOSED FACES OF THE MEDIAN STRIP IN ACCORDANCE WITH ATRICLE 825-10(B) OF THE STANDARD SPECIFICATIONS. THE CONTRACTION JOINTS SHALL BE LOCATED AT A SPACING OF 8' TO 10' BETWEEN EXPANSION JOINTS. NO CONTRACTION JOINTS WILL BE REQUIRED FOR SEGMENTS LESS THAN 10' IN LENGTH.

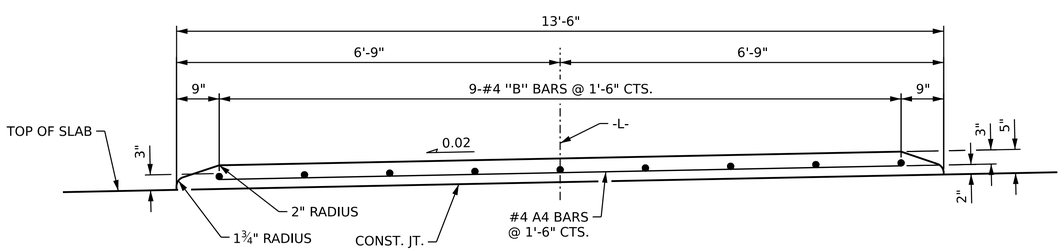

SECTION THRU CONCRETE MEDIAN

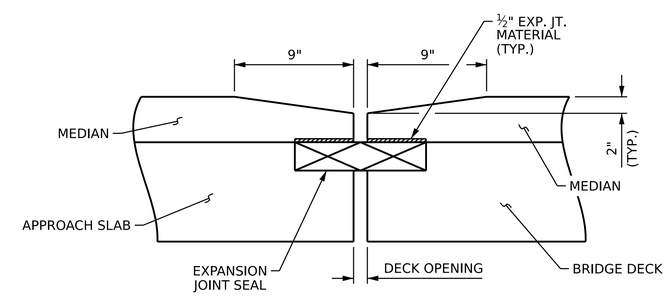

DETAILS AT EXPANSION JOINT SEAL

PROJECT NO. U-5899

FORSYTH COUNTY

STATION: 32+73.75 -L-

PREPARED BY

MOTT MACDONALD

7621 Parfey Rd., Suite 115
Fuquay-Varina, NC 27526
(919) 552-2253
License No. F-0669
www.mottmac.com

NORTH CAROLINA PROFESSIONAL SEAL 039313 ENGINEER

DocuSigned by: Jessica M. Robinson
DBAAAB7E0A0A4F0...
31-Mar-2025

STATE OF NORTH CAROLINA
DEPARTMENT OF TRANSPORTATION
RALEIGH

SUPERSTRUCTURE

CONCRETE MEDIAN DETAILS

REVISIONS						SHEET NO.
NO.	BY:	DATE:	NO.	BY:	DATE:	S01-11
1			3			TOTAL SHEETS
2			4			36

DOCUMENT NOT CONSIDERED FINAL UNLESS ALL SIGNATURES COMPLETED

DRAWN BY :	L. L. BLANKENSHIP	DATE :	10-2023
CHECKED BY :	J. M. ROBINSON	DATE :	10-2023
DESIGN ENGINEER OF RECORD:	R. L. DICKE	DATE :	10-2023

1/27/2025 6:03:36 PM
R:\Structures\BRC_01_330747\Plans\401_021_U-5899_SMU_MD_S01-11_330747.dgn
WILSTOTT

Docusign Envelope ID: 16E2D990-30DC-440F-9F27-F28A276FE772

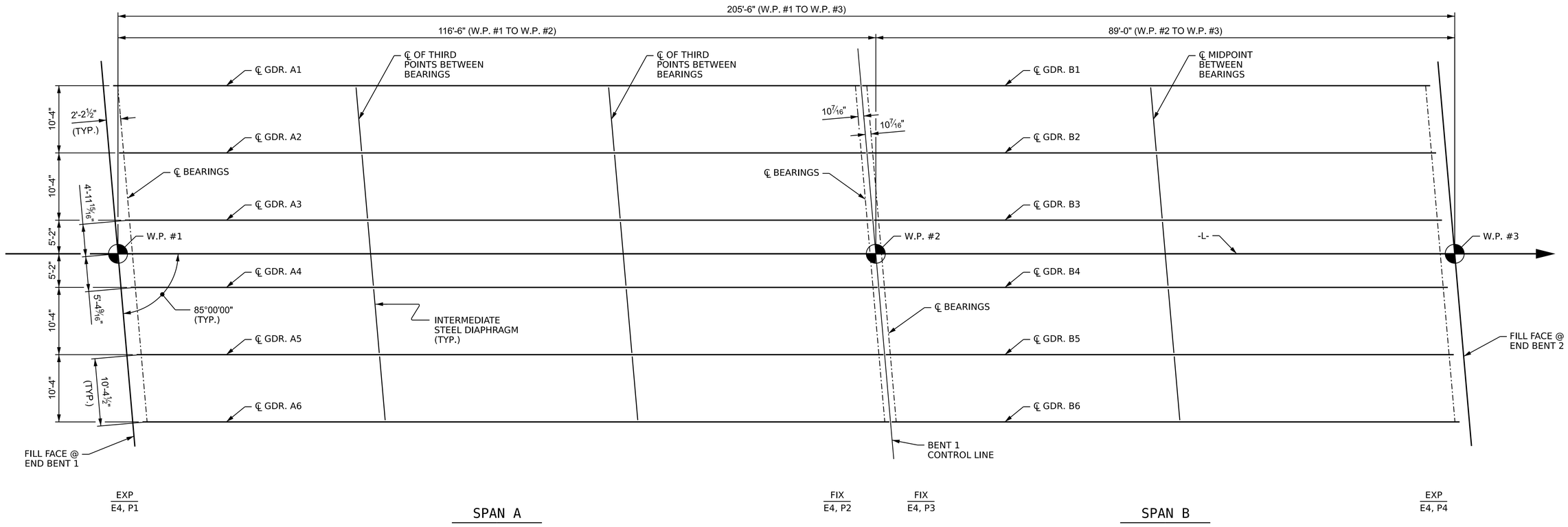

FRAMING PLAN

PROJECT NO. U-5899

FORSYTH COUNTY

STATION: 32+73.75 -L-

PREPARED BY

MOTT MACDONALD

7621 Parkway Rd., Suite 115
Fuquay-Varina, NC 27526
(919) 552-2353
License No. F-0669
www.mottmac.com

NORTH CAROLINA PROFESSIONAL SEAL 039313 ENGINEER KEVIN M. KORNSON

31-Mar-2025

STATE OF NORTH CAROLINA
DEPARTMENT OF TRANSPORTATION
RALEIGH

SUPERSTRUCTURE

FRAMING PLAN

REVISIONS						SHEET NO.
NO.	BY:	DATE:	NO.	BY:	DATE:	S01-12
1			3			TOTAL SHEETS
2			4			36

DOCUMENT NOT CONSIDERED FINAL UNLESS ALL SIGNATURES COMPLETED

DRAWN BY :	L. L. BLANKENSHIP	DATE :	8-2023
CHECKED BY :	J. M. ROBINSON	DATE :	10-2023
DESIGN ENGINEER OF RECORD:	R. L. DICKE	DATE :	10-2023

1/27/2025 6:03:36 PM
R:\Structures\BRC_01_330747\Plans\401_023_U-5899_SMU_FP_S01-12_330747.dgn
WILSTOTT

Docusign Envelope ID: 16E2D990-30DC-440F-9F27-F28A276FE772

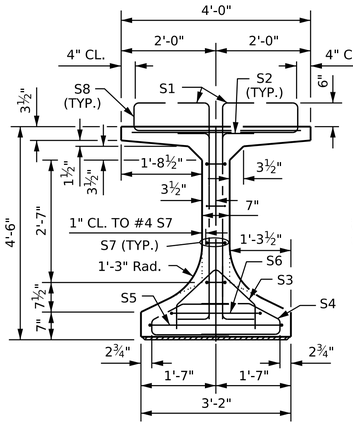

SECTION A-A

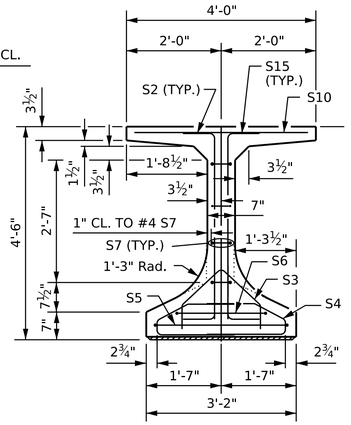

SECTION B-B

DEBONDING LEGEND

- ● FULLY BONDED STRANDS
- ◬ STRANDS DEBONDED FOR 4'-0" FROM END OF GIRDER

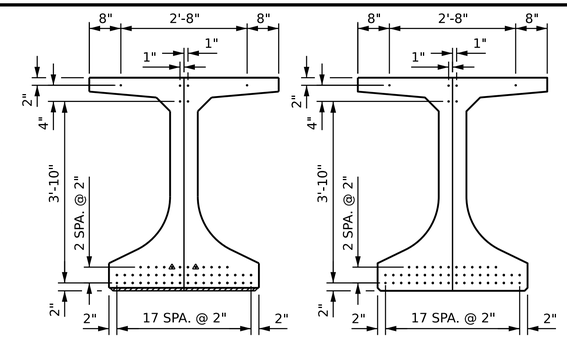

0.6" ⌀ LOW RELAXATION STRAND LAYOUT

0.6"⌀ L. R. GRADE 270 STRANDS

AREA (SQUARE INCHES)	ULTIMATE STRENGTH (LBS. PER STRAND)	APPLIED PRESTRESS (LBS. PER STRAND)
0.217	58,600	43,950

REINFORCING STEEL FOR ONE GDR

BAR	NUMBER	SIZE	TYPE	LENGTH	WEIGHT
S1	41	#5	5	5'-4"	228
S2	30	#5	4	5'-4"	167
S3	52	#3	2	3'-4"	65
S4	104	#3	1	4'-3"	166
S5	2	#5	3	10'-9"	22
S6	2	#5	3	9'-9"	20
S7	8	#4	3	8'-5"	45
S8	209	#5	7	4'-8"	1017
S9	168	#4	5	5'-4"	599
S10	56	#5	STR	3'-8"	214
S12	8	#5	6	8'-6"	71
S14	10	#4	STR	8'-0"	53
S15	29	#5	5	4'-8"	141

BAR TYPES

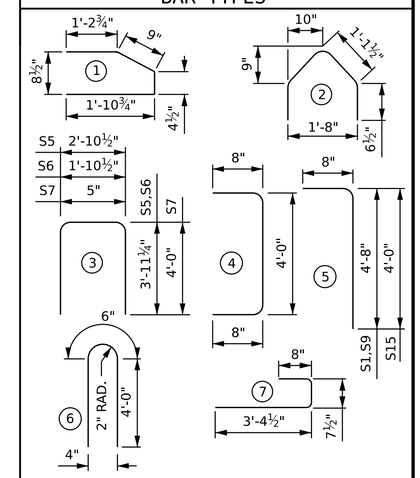

ALL BAR DIMENSIONS ARE OUT-TO-OUT

QUANTITIES FOR ONE GIRDER

REINFORCING STEEL	9000 PSI CONCRETE	0.6" ⌀ L.R. STRANDS
LB.	C.Y.	No.
2808	27.5	54

GIRDERS REQUIRED

NUMBER	LENGTH	TOTAL LENGTH
6	114'-10"	689'-0"

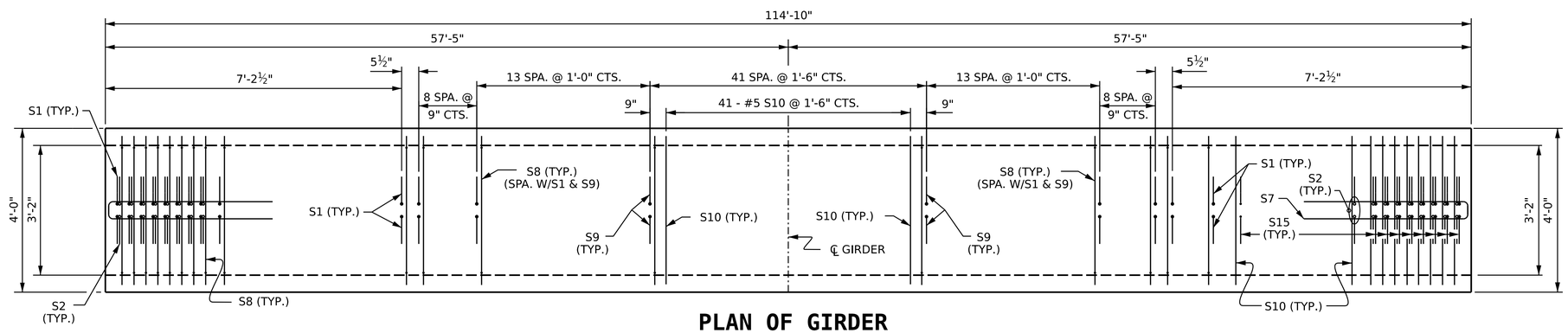

PLAN OF GIRDER

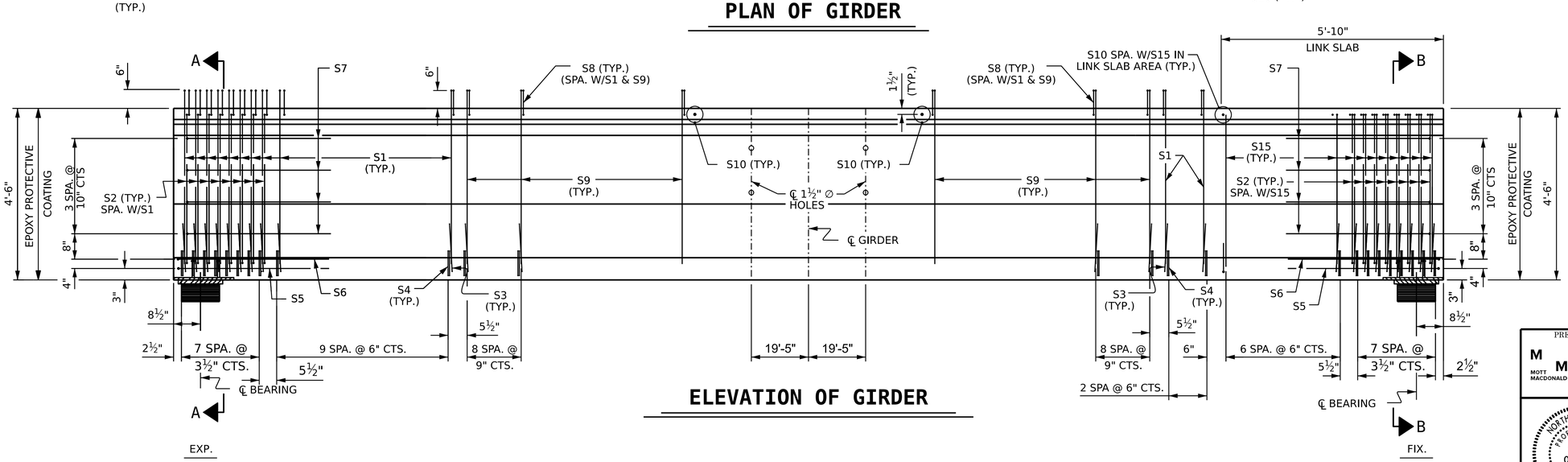

ELEVATION OF GIRDER

ALL BAR DIMENSIONS ARE OUT-TO-OUT

PROJECT NO. U-5899

FORSYTH COUNTY

STATION: 32+73.75 -L-

SHEET 1 OF 4

PREPARED BY

MOTT MACDONALD
7621 Parfrey Rd., Suite 115
Fuquay-Varina, NC 27526
(919) 552-2353
License No. F-0669
www.mottmac.com

NORTH CAROLINA PROFESSIONAL SEAL 039313 ENGINEER JOHN M. ROBINSON
DocuSigned by: John M. Robinson
31-MAR-2023

STATE OF NORTH CAROLINA
DEPARTMENT OF TRANSPORTATION
RALEIGH

54" FIB PRESTRESSED CONCRETE GIRDER LINK SLAB SPAN A

REVISIONS							SHEET NO.
NO.	BY:	DATE:	NO.	BY:	DATE:		S01-13
1			3				TOTAL SHEETS
2			4				36

DRAWN BY : L. L. BLANKENSHIP DATE : 9-2023
CHECKED BY : J. M. ROBINSON DATE : 10-2023
DESIGN ENGINEER OF RECORD: R. L. DICKE DATE : 10-2023

DOCUMENT NOT CONSIDERED FINAL UNLESS ALL SIGNATURES COMPLETED

1/27/2025 6:03:37 PM
R:\Structures\BRG_01_330747\Plans\401_025_U-5899_SMU_01_S01-13_330747.dgn
WILS7077

Docusign Envelope ID: 16E2D990-30DC-440F-9F27-F28A276FE772

8/26/21

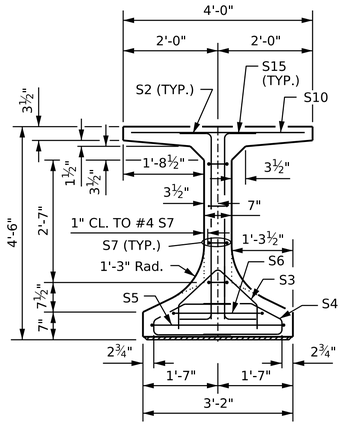

SECTION A-A

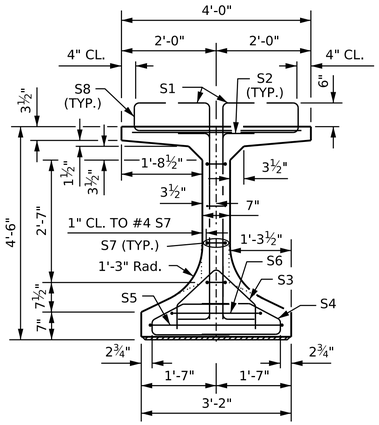

SECTION B-B

*

DEBONDING LEGEND

- FULLY BONDED STRANDS

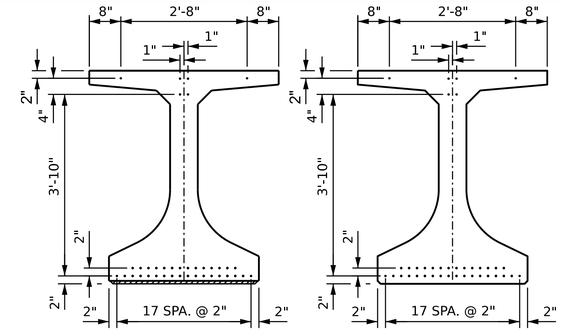

0.6" ø LOW RELAXATION STRAND LAYOUT

0.6"ø L. R. GRADE 270 STRANDS

AREA (SQUARE INCHES)	ULTIMATE STRENGTH (LBS. PER STRAND)	APPLIED PRESTRESS (LBS. PER STRAND)
0.217	58,600	43,950

REINFORCING STEEL FOR ONE GDR

BAR	NUMBER	SIZE	TYPE	LENGTH	WEIGHT
S1	46	#5	5	5'-4"	256
S2	28	#5	4	5'-4"	156
S3	42	#3	2	3'-4"	53
S4	84	#3	1	4'-3"	134
S5	2	#5	3	10'-9"	22
S6	2	#5	3	9'-9"	20
S7	8	#4	3	8'-5"	45
S8	172	#5	7	4'-8"	837
S9	126	#4	5	5'-4"	449
S10	33	#5	STR	3'-8"	126
S12	4	#5	6	8'-6"	35
S14	5	#4	STR	8'-0"	27
S15	22	#5	5	4'-8"	107

BAR TYPES

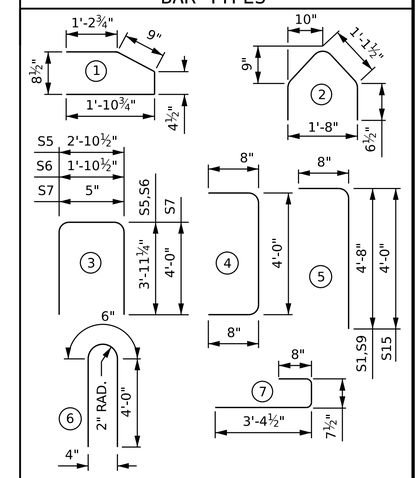

ALL BAR DIMENSIONS ARE OUT-TO-OUT

QUANTITIES FOR ONE GIRDER

REINFORCING STEEL	8000 PSI CONCRETE	0.6" ∅ L.R. STRANDS
LB.	C.Y.	No.
2267	20.9	38

GIRDERS REQUIRED

NUMBER	LENGTH	TOTAL LENGTH
6	87'-4"	524'-0"

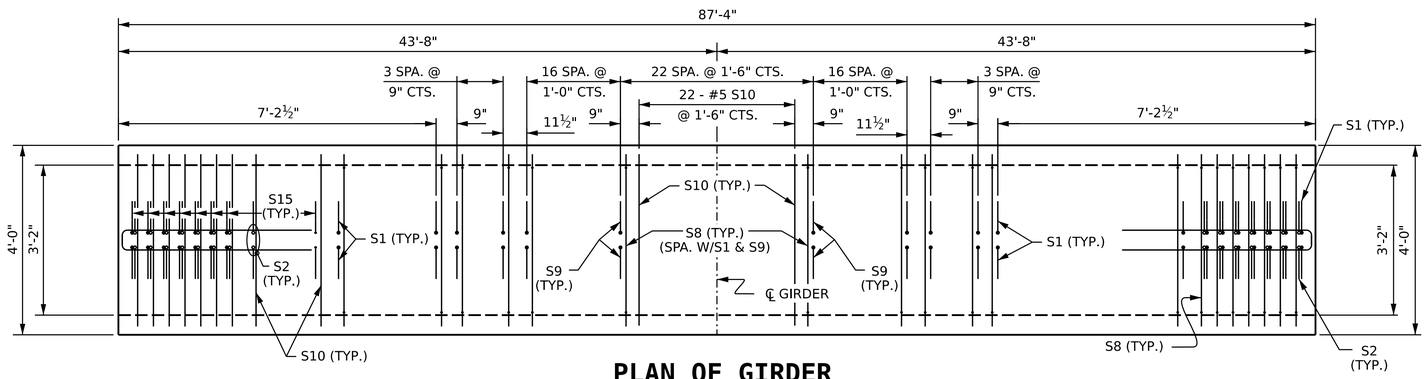

PLAN OF GIRDER

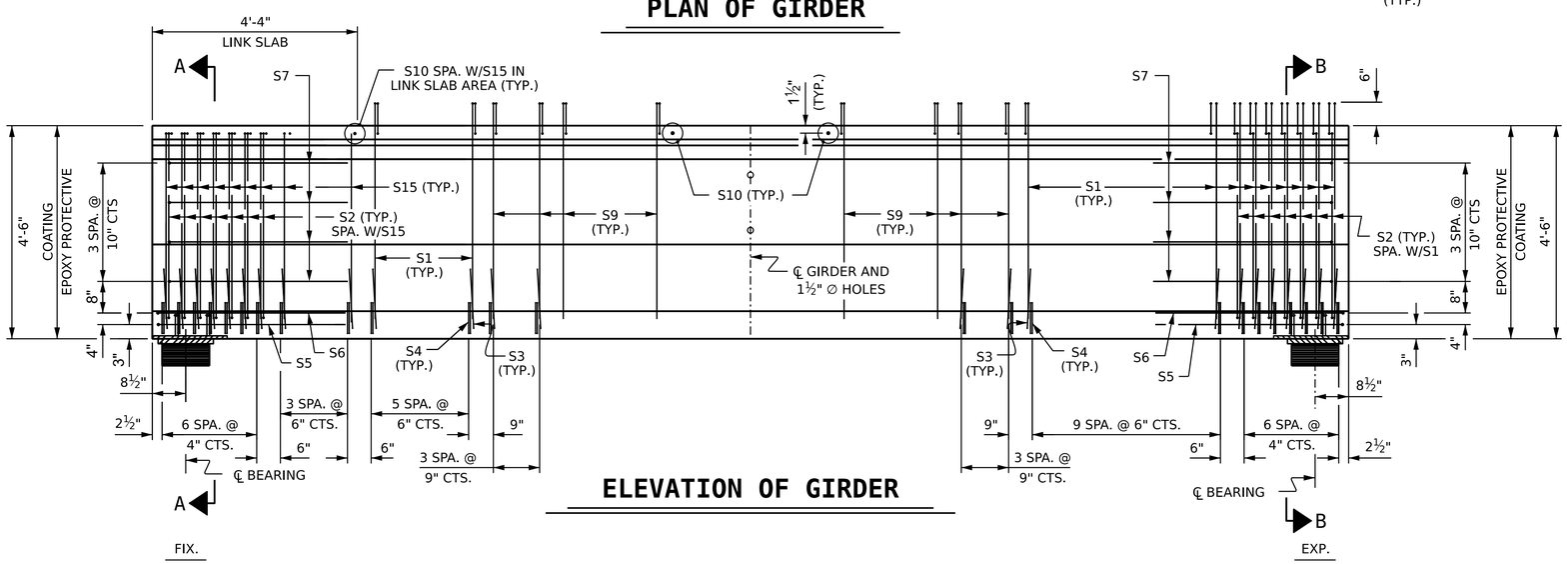

ELEVATION OF GIRDER

PROJECT NO. U-5899

FORSYTH COUNTY

STATION: 32+73.75 -L-

SHEET 2 OF 4

PREPARED BY

MOTT MACDONALD
7621 Parfrey Rd., Suite 115
Fuquay-Varina, NC 27526
(919) 552-2353
License No. F-0669
www.mottmac.com

NORTH CAROLINA PROFESSIONAL SEAL 039313 ENGINEER JUSTIN M. ROBINSON
DocuSigned by: Justin M. Robinson
31-MAY-2023

STATE OF NORTH CAROLINA
DEPARTMENT OF TRANSPORTATION
RALEIGH

54" FIB PRESTRESSED CONCRETE GIRDER LINK SLAB SPAN B

REVISIONS							SHEET NO.
NO.	BY:	DATE:	NO.	BY:	DATE:		S01-14
1			3				TOTAL SHEETS
2			4				36

DRAWN BY :	L. L. BLANKENSHIP	DATE :	9-2023
CHECKED BY :	J. M. ROBINSON	DATE :	10-2023
DESIGN ENGINEER OF RECORD:	R. L. DICKE	DATE :	10-2023

DOCUMENT NOT CONSIDERED FINAL UNLESS ALL SIGNATURES COMPLETED

1/27/2025 6:03:38 PM
R:\Structures\BRG_01_330747\Plans\401_027_U-5899_SMU_02_S01-14_330747.dgn
WILSTOTT

Docusign Envelope ID: 16E2D990-30DC-440F-9F27-F28A276FE772

DEAD LOAD DEFLECTION TABLE

0.6" ⌀ LOW RELAXATION	SPAN A																					
	EXTERIOR LEFT GIRDER																					
FOURTIETH POINTS	0.000	0.025	0.050	0.075	0.100	0.125	0.150	0.175	0.200	0.225	0.250	0.275	0.300	0.325	0.350	0.375	0.400	0.425	0.450	0.475	0.500	
CAMBER (GIRDER ALONE IN PLACE) ↑	0.000	0.026	0.051	0.076	0.101	0.125	0.148	0.171	0.190	0.211	0.230	0.247	0.262	0.276	0.288	0.299	0.307	0.314	0.319	0.322	0.323	
* DEFLECTION DUE TO D.L. ↓	0.000	-0.018	-0.036	-0.053	-0.071	-0.087	-0.103	-0.119	-0.133	-0.147	-0.160	-0.172	-0.183	-0.192	-0.201	-0.208	-0.214	-0.219	-0.222	-0.224	-0.225	
FINAL CAMBER ↑	0"	1/8"	3/16"	1/4"	3/8"	7/16"	9/16"	5/8"	11/16"	3/4"	13/16"	7/8"	15/16"	1"	1 1/16"	1 1/16"	1 1/8"	1 1/8"	1 3/16"	1 3/16"	1 3/16"	
FOURTIETH POINTS ↑	0.525	0.550	0.575	0.600	0.625	0.650	0.675	0.700	0.725	0.750	0.775	0.800	0.825	0.850	0.875	0.900	0.925	0.950	0.975	1.000		
CAMBER (GIRDER ALONE IN PLACE) ↓	0.322	0.319	0.314	0.307	0.299	0.288	0.276	0.262	0.247	0.230	0.211	0.190	0.171	0.148	0.125	0.101	0.076	0.051	0.026	0.000		
* DEFLECTION DUE TO D.L. ↑	-0.224	-0.222	-0.219	-0.214	-0.208	-0.201	-0.192	-0.183	-0.172	-0.160	-0.147	-0.133	-0.119	-0.103	-0.087	-0.071	-0.053	-0.036	-0.018	0.000		
FINAL CAMBER	1 3/16"	1 3/16"	1 1/8"	1 1/8"	1 1/16"	1 1/16"	1"	15/16"	7/8"	13/16"	3/4"	11/16"	5/8"	9/16"	7/16"	3/8"	1/4"	3/16"	1/8"	0"		
	INTERIOR GIRDERS																					
FOURTIETH POINTS	0.000	0.025	0.050	0.075	0.100	0.125	0.150	0.175	0.200	0.225	0.250	0.275	0.300	0.325	0.350	0.375	0.400	0.425	0.450	0.475	0.500	
CAMBER (GIRDER ALONE IN PLACE) ↑	0.000	0.026	0.051	0.076	0.101	0.125	0.148	0.171	0.190	0.211	0.230	0.247	0.262	0.276	0.288	0.299	0.307	0.314	0.319	0.322	0.323	
* DEFLECTION DUE TO D.L. ↓	0.000	-0.020	-0.040	-0.059	-0.078	-0.097	-0.115	-0.132	-0.147	-0.163	-0.178	-0.191	-0.203	-0.213	-0.223	-0.231	-0.237	-0.242	-0.246	-0.248	-0.249	
FINAL CAMBER ↑	0"	1/16"	1/8"	3/16"	1/4"	5/16"	3/8"	7/16"	1/2"	9/16"	5/8"	11/16"	11/16"	3/4"	13/16"	13/16"	13/16"	7/8"	7/8"	7/8"	7/8"	
FOURTIETH POINTS	0.525	0.550	0.575	0.600	0.625	0.650	0.675	0.700	0.725	0.750	0.775	0.800	0.825	0.850	0.875	0.900	0.925	0.950	0.975	1.000		
CAMBER (GIRDER ALONE IN PLACE) ↓	0.322	0.319	0.314	0.307	0.299	0.288	0.276	0.262	0.247	0.230	0.211	0.190	0.171	0.148	0.125	0.101	0.076	0.051	0.026	0.000		
* DEFLECTION DUE TO D.L. ↑	-0.248	-0.246	-0.242	-0.237	-0.231	-0.223	-0.213	-0.203	-0.191	-0.178	-0.163	-0.147	-0.132	-0.115	-0.097	-0.078	-0.059	-0.040	-0.020	0.000		
FINAL CAMBER ↑	7/8"	7/8"	7/8"	13/16"	13/16"	13/16"	3/4"	11/16"	11/16"	5/8"	9/16"	1/2"	7/16"	3/8"	5/16"	1/4"	3/16"	1/8"	1/16"	0"		
	EXTERIOR RIGHT GIRDER																					
FOURTIETH POINTS	0.000	0.025	0.050	0.075	0.100	0.125	0.150	0.175	0.200	0.225	0.250	0.275	0.300	0.325	0.350	0.375	0.400	0.425	0.450	0.475	0.500	
CAMBER (GIRDER ALONE IN PLACE) ↑	0.000	0.026	0.051	0.076	0.101	0.125	0.148	0.171	0.190	0.211	0.230	0.247	0.262	0.276	0.288	0.299	0.307	0.314	0.319	0.322	0.323	
* DEFLECTION DUE TO D.L. ↓	0.000	-0.018	-0.035	-0.053	-0.070	-0.086	-0.102	-0.117	-0.131	-0.145	-0.158	-0.170	-0.181	-0.190	-0.199	-0.206	-0.211	-0.216	-0.219	-0.221	-0.222	
FINAL CAMBER ↑	0"	1/8"	3/16"	5/16"	3/8"	7/16"	9/16"	5/8"	11/16"	13/16"	7/8"	15/16"	1"	1 1/16"	1 1/16"	1 1/8"	1 1/8"	1 3/16"	1 3/16"	1 3/16"	1 3/16"	
FOURTIETH POINTS	0.525	0.550	0.575	0.600	0.625	0.650	0.675	0.700	0.725	0.750	0.775	0.800	0.825	0.850	0.875	0.900	0.925	0.950	0.975	1.000		
CAMBER (GIRDER ALONE IN PLACE) ↓	0.322	0.319	0.314	0.307	0.299	0.288	0.276	0.262	0.247	0.230	0.211	0.190	0.171	0.148	0.125	0.101	0.076	0.051	0.026	0.000		
* DEFLECTION DUE TO D.L. ↑	-0.221	-0.219	-0.216	-0.211	-0.206	-0.199	-0.190	-0.181	-0.170	-0.158	-0.145	-0.131	-0.117	-0.102	-0.086	-0.070	-0.053	-0.035	-0.018	0.000		
FINAL CAMBER ↑	1 3/16"	1 3/16"	1 3/16"	1 1/8"	1 1/8"	1 1/16"	1 1/16"	1"	15/16"	7/8"	13/16"	11/16"	5/8"	9/16"	7/16"	3/8"	5/16"	3/16"	1/8"	0"		

0.6" ⌀ LOW RELAXATION	SPAN B																					
	EXTERIOR LEFT GIRDER																					
TWENTIETH POINTS	0.000	0.050	0.100	0.150	0.200	0.250	0.300	0.350	0.400	0.450	0.500	0.550	0.600	0.650	0.700	0.750	0.800	0.850	0.900	0.950	1.000	
CAMBER (GIRDER ALONE IN PLACE) ↑	0.000	0.022	0.043	0.064	0.082	0.099	0.113	0.124	0.132	0.137	0.139	0.137	0.132	0.124	0.113	0.099	0.082	0.064	0.043	0.022	0.000	
* DEFLECTION DUE TO D.L. ↓	0.000	-0.012	-0.024	-0.036	-0.046	-0.055	-0.063	-0.069	-0.074	-0.076	-0.077	-0.076	-0.074	-0.069	-0.063	-0.055	-0.046	-0.036	-0.024	-0.012	0.000	
FINAL CAMBER ↑	0"	1/8"	1/4"	5/16"	7/16"	1/2"	5/8"	11/16"	11/16"	3/4"	3/4"	3/4"	11/16"	11/16"	5/8"	1/2"	7/16"	5/16"	1/4"	1/8"	0"	
	INTERIOR GIRDERS																					
TWENTIETH POINTS	0.000	0.050	0.100	0.150	0.200	0.250	0.300	0.350	0.400	0.450	0.500	0.550	0.600	0.650	0.700	0.750	0.800	0.850	0.900	0.950	1.000	
CAMBER (GIRDER ALONE IN PLACE) ↑	0.000	0.022	0.053	0.064	0.082	0.099	0.113	0.124	0.132	0.137	0.139	0.137	0.132	0.124	0.113	0.099	0.082	0.064	0.043	0.022	0.000	
* DEFLECTION DUE TO D.L. ↓	0.000	-0.019	-0.027	-0.039	-0.051	-0.061	-0.070	-0.077	-0.082	-0.085	-0.086	-0.085	-0.082	-0.077	-0.070	-0.061	-0.051	-0.039	-0.027	-0.014	0.000	
FINAL CAMBER ↑	0"	1/8"	3/16"	5/16"	3/8"	7/16"	1/2"	9/16"	5/8"	5/8"	5/8"	5/8"	5/8"	9/16"	1/2"	7/16"	3/8"	5/16"	3/16"	1/8"	0"	
	EXTERIOR RIGHT GIRDER																					
TWENTIETH POINTS	0.000	0.050	0.100	0.150	0.200	0.250	0.300	0.350	0.400	0.450	0.500	0.550	0.600	0.650	0.700	0.750	0.800	0.850	0.900	0.950	1.000	
CAMBER (GIRDER ALONE IN PLACE) ↑	0.000	0.022	0.043	0.064	0.082	0.099	0.113	0.124	0.132	0.137	0.139	0.137	0.132	0.124	0.113	0.099	0.082	0.064	0.043	0.022	0.000	
* DEFLECTION DUE TO D.L. ↓	0.000	-0.012	-0.024	-0.035	-0.045	-0.054	-0.062	-0.068	-0.073	-0.075	-0.076	-0.075	-0.073	-0.068	-0.062	-0.054	-0.045	-0.035	-0.024	-0.012	0.000	
FINAL CAMBER ↑	0"	1/8"	1/4"	5/16"	7/16"	9/16"	5/8"	11/16"	11/16"	3/4"	3/4"	3/4"	11/16"	11/16"	5/8"	9/16"	7/16"	5/16"	1/4"	1/8"	0"	

* INCLUDES FUTURE WEARING SURFACE

ALL VALUES ARE SHOWN IN FEET (DECIMAL FORM), EXCEPT " FINAL CAMBER ", WHICH IS GIVEN IN INCHES (FRACTION FORM).

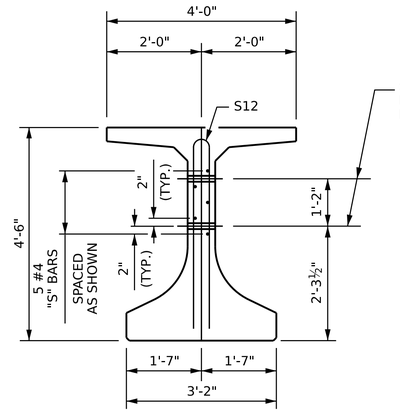

SECTION C-C

(S8, S9 AND S10 BARS NOT SHOWN)

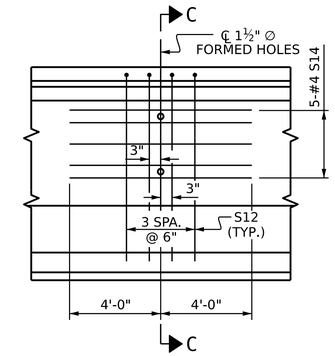

PARTIAL ELEVATION

SHOWING INTERMEDIATE STEEL DIAPHRAGM REINFORCING STEEL FOR GIRDERS

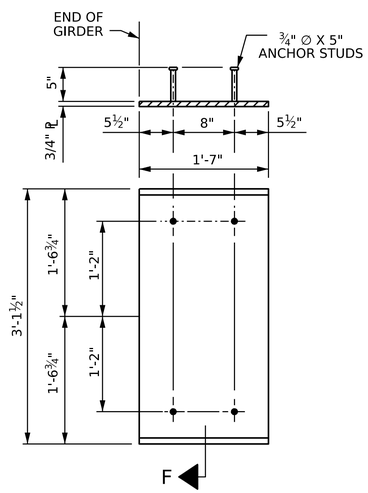

SECTION "F"

(SEE NOTES)

EMBEDDED PLATE "B-1" DETAILS FOR FIB GIRDER

(2 REQ'D PER GIRDER)

NOTES:

ALL PRESTRESSING STRANDS SHALL BE 7-WIRE LOW-RELAXATION GRADE 270 STRANDS AND SHALL CONFORM TO AASHTO M203 EXCEPT FOR SAMPLING REQUIREMENTS WHICHSHALL BE IN ACCORDANCE WITH THE STANDARD SPECIFICATIONS.

EMBEDDED PLATE "B-1" SHALL BE GALVANIZED IN ACCORDANCE WITH THE STANDARD SPECIFICATIONS.

ANCHOR STUDS SHALL CONFORM TO AASHTO M169 GRADES 1010 THROUGH 1020 OR APPROVED EQUAL, AND SHALL MEET THE TYPE "B" REQUIREMENTS OF SUBSECTION 7.3 OF THE ANSI/AASHTO/AWS D1.5 BRIDGE WELDING CODE.

AT ENDS OF GIRDERS TO BE EMBEDDED IN CONCRETE DIAPHRAGMS OR END WALLS, PRESTRESSING STRANDS MAY EXTEND A MAXIMUM OF 2" BEYOND THE GIRDER ENDS. OTHERWISE, PRESTRESSING STRANDS SHALL BE CUT FLUSH WITH THE GIRDER ENDS.

ALL PRESTRESSING STRANDS SHALL BE 7-WIRE LOW-RELAXATION GRADE 270
THE TRANSFER OF LOAD FROM THE ANCHORAGES TO THE GIRDER SHALL BE DONE WHEN CONCRETE HAS REACHED A COMPRESSIVE STRENGTH OF NOT LESS THAN 6500 PSI FOR SPAN A AND 6000 PSI FOR SPAN B.

DEPENDING ON THE TYPE OF SYSTEM USED TO SUPPORT THE DECK SLAB FORMS, PRESET ANCHORS MAY BE NECESSARY IN THE PRESTRESSED CONCRETE GIRDER.

THE TOP SURFACE OF THE GIRDER, EXCLUDING THE OUTSIDE 4" AND WHERE INDICATED IN THE ELEVATION VIEW, SHALL BE RAKED TO A DEPTH OF ¼".

ALL REINFORCING STEEL SHALL BE GRADE 60.

PROJECT NO. U-5899
FORSYTH COUNTY
STATION: 32+73.75 -L-

SHEET 3 OF 4

PREPARED BY
MOTT MACDONALD
7621 Parfrey Rd., Suite 115
Fuquay-Varina, NC 27526
(919) 552-2253
License No. F-0669
www.mottmac.com

NORTH CAROLINA PROFESSIONAL SEAL 039313 ENGINEER
31-Mar-2026

DOCUMENT NOT CONSIDERED FINAL UNLESS ALL SIGNATURES COMPLETED

STATE OF NORTH CAROLINA
DEPARTMENT OF TRANSPORTATION
RALEIGH

DEAD LOAD DEFELCTION TABLES AND PRESTRESSED CONCRETE GIRDER DETAILS

REVISIONS						SHEET NO.
NO.	BY:	DATE:	NO.	BY:	DATE:	S01-15
1			3			TOTAL SHEETS
2			4			36

DRAWN BY : L. L. BLANKENSHIP DATE : 10-2023
CHECKED BY : J. M. ROBINSON DATE : 10-2023
DESIGN ENGINEER OF RECORD: R. L. DICKE DATE : 10-2023

1/27/2025 6:03:38 PM
R:\Structures\Bridge\Structures\BRC_01_330747\Plans\401_029_U-5899_SMU_03_S01-15_330747.dgn
WILSTOTT

Docusign Envelope ID: 16E2D990-30DC-440F-9F27-F28A276FE772

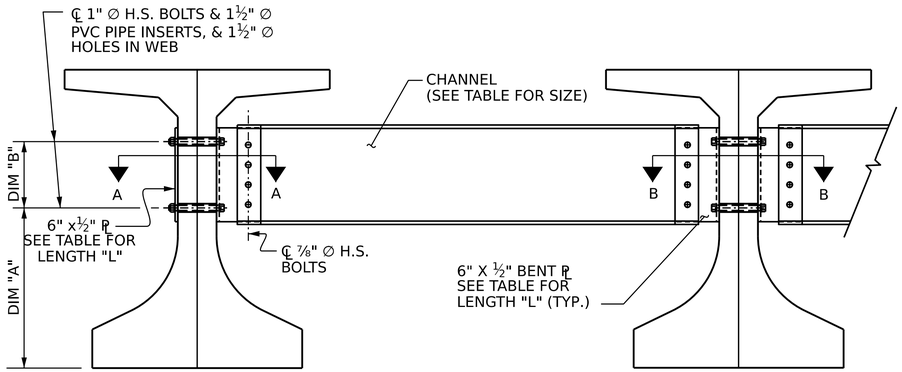

EXTERIOR GIRDER

INTERIOR GIRDER

PART SECTION AT INTERMEDIATE DIAPHRAGM

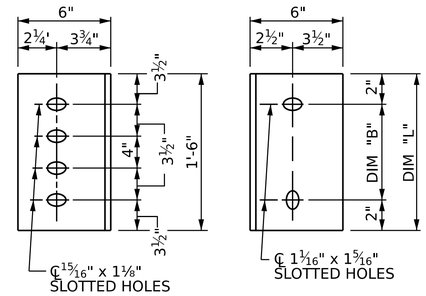

DIAPHRAGM FACE

WEB FACE

CONNECTOR PLATE DETAILS

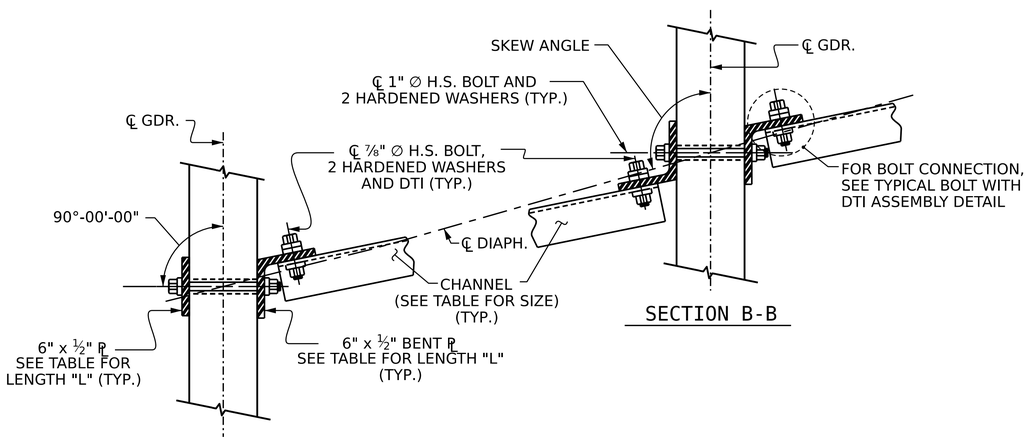

SECTION B-B

SECTION A-A

CONNECTOR DETAILS

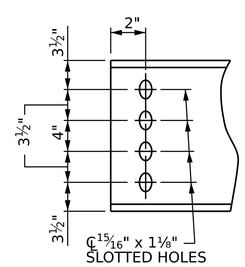

CHANNEL END

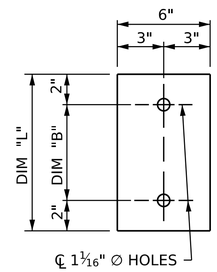

PLATE DETAILS

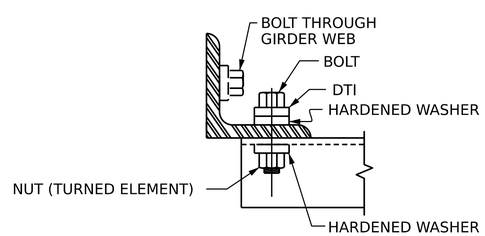

BOLT WITH DTI ASSEMBLY DETAIL

STRUCTURAL STEEL NOTES:

ALL INTERMEDIATE DIAPHRAGM STEEL AND CONNECTOR PLATES SHALL BE AASHTO M270 GRADE 50 OR APPROVED EQUAL.

TENSION ON THE ASTM A325 BOLTS THROUGH THE ANGLE MEMBER SHALL BE CALIBRATED USING DIRECT TENSION INDICATOR WASHERS IN ACCORDANCE WITH THE STANDARD SPECIFICATIONS.

TENSION ON THE ASTM A449 BOLTS THROUGH THE GIRDER WEB SHALL BE SNUG TIGHTENED FOLLOWED BY AN ADDITIONAL ¼ TURN.

THE PLATES, BENT PLATES, AND ANGLES SHALL BE GALVANIZED OR METALLIZED IN ACCORDANCE WITH THE STANDARD SPECIFICATIONS. FOR THERMAL SPRAYED COATINGS (METALLIZATION), SEE SPECIAL PROVISIONS.

FOR METALLIZATION, APPLY A THERMAL SPRAYED COATING WITH A SEAL COAT TO ALL STEEL DIAPHRAGM SURFACES IN ACCORDANCE WITH THE DEPARTMENTS THERMAL SPRAYED COATINGS (METALLIZATION) PROGRAM, THERMAL SPRAYED COATINGS SPECIAL PROVISION AND SECTION 442 OF THE STANDARD SPECIFICATIONS.

GALVANIZE THE HIGH STRENGTH BOLTS, NUTS, WASHERS AND DIRECT TENSION INDICATORS IN ACCORDANCE WITH THE STANDARD SPECIFICATIONS.

USE AN ASTM F436 HARDENED WASHER WITH STANDARD AND SLOTTED HOLES UNDER EACH BOLT HEAD AND NUT.

FOR BOLTS THROUGH THE GIRDER WEB, PROVIDE SUFFICIENT LENGTH OF THREADS ON ALL BOLTS TO ACCOMMODATE WASHERS AND THE THICKNESS OF CONNECTING MEMBER PLUS AT LEAST ¼" PROJECTION BEYOND THE NUT.

INTERMEDIATE DIAPHRAGM ASSEMBLY SHALL COMPLY WITH SECTION 1072 OF THE STANDARD SPECIFICATIONS.

SUBMIT TWO SETS OF WORKING DRAWINGS FOR THE INTERMEDIATE DIAPHRAGM ASSEMBLY FOR REVIEW, COMMENTS AND ACCEPTANCE. AFTER REVIEW, COMMENTS, AND ACCEPTANCE, SUBMIT SEVEN SETS FOR DISTRIBUTION.

IN THE EXTERIOR BAYS, PLACE TEMPORARY STRUTS BETWEEN PRESTRESSED GIRDERS ADJACENT TO THE STEEL DIAPHRAGMS. STRUTS SHALL REMAIN IN PLACE 3 DAYS AFTER CONCRETE IS PLACED.

THE COST OF THE STEEL DIAPHRAGMS AND ASSEMBLIES SHALL BE INCLUDED IN THE UNIT PRICE BID FOR PRESTRESSED CONCRETE GIRDERS.

TABLE

GIRDER TYPE	CHANNEL SIZE	DIM "A"	DIM "B"	DIM "L"
54" FIB	MC 18 x 42.7	2'-3½"	1'-2"	1'-6"

PROJECT NO. U-5899

FORSYTH COUNTY

STATION: 32+73.75 -L-

SHEET 4 OF 4

PREPARED BY

MOTT MACDONALD

7621 Parfey Rd., Suite 115
Fuquay-Varina, NC 27526
(919) 552-2353
License No. F-0669
www.mottmac.com

NORTH CAROLINA PROFESSIONAL SEAL 039313 ENGINEER JOHNNY M. ROBINSON

DocuSigned by:
Johnny M. Robinson
31-Mar-2023

STATE OF NORTH CAROLINA
DEPARTMENT OF TRANSPORTATION
RALEIGH

INTERMEDIATE STEEL DIAPHRAGMS FOR 54" FIB

REVISIONS							SHEET NO.
NO.	BY:	DATE:	NO.	BY:	DATE:		S01-16
1			3				TOTAL SHEETS
2			4				36

DRAWN BY : L. L. BLANKENSHIP DATE : 10-2023
CHECKED BY : J. M. ROBINSON DATE : 10-2023
DESIGN ENGINEER OF RECORD: R. L. DICKE DATE : 10-2023

DOCUMENT NOT CONSIDERED FINAL UNLESS ALL SIGNATURES COMPLETED

1/27/2025 6:03:39 PM
R:\Structures\BRG_01_330747\Plans\401_031_U-5899_SMU_C4_S01-16_330747.dgn
W115707

Docusign Envelope ID: 16E2D990-30DC-440F-9F27-F28A276FE772

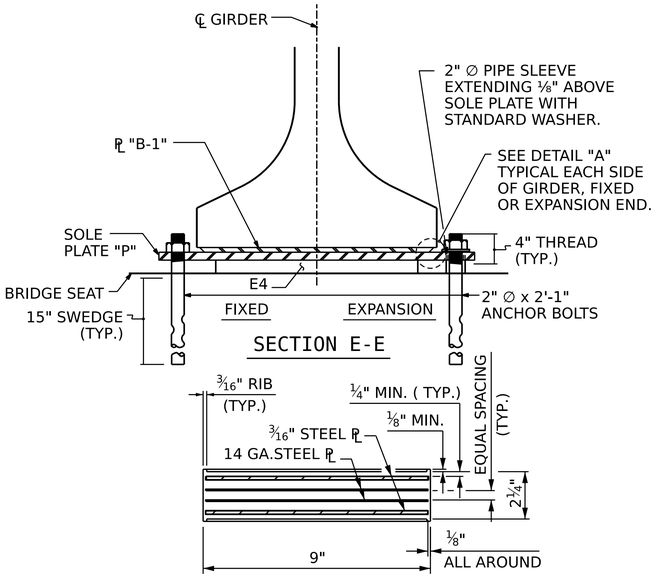

TYPICAL SECTION OF ELASTOMERIC BEARINGS

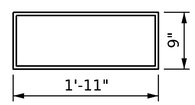

E4 (24 REQ'D)

PLAN VIEW OF ELASTOMERIC BEARING

TYPE V

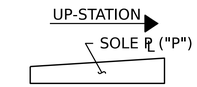

SOLE PL PLACEMENT DETAIL

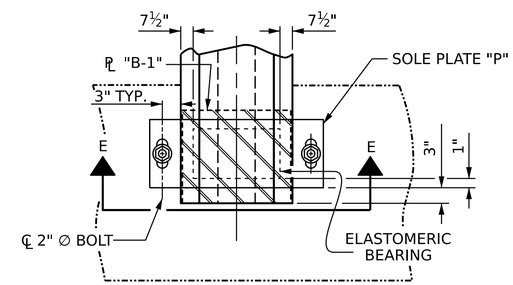

BEARING PLATE AT END BENTS

(EXPANSION)

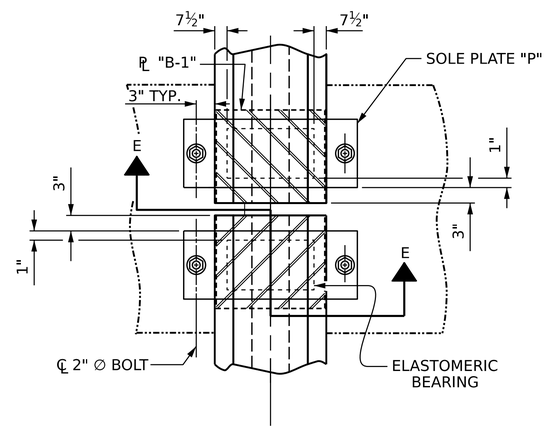

BEARING PLATE AT BENTS

(FIXED)

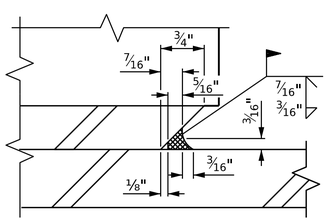

DETAIL "A"

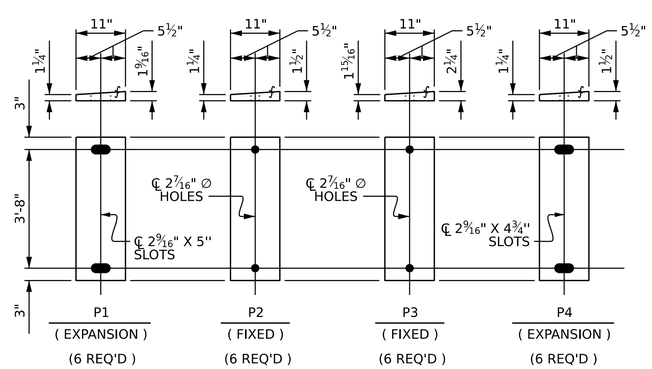

SOLE PLATE DETAILS ("P")

NOTES:

AT ALL FIXED POINTS OF SUPPORT, NUTS FOR ANCHOR BOLTS ARE TO BE TIGHTENED FINGER TIGHT AND THEN BACKED OFF ½ TURN. THE THREAD OF THE NUT AND BOLT SHALL THEN BE BURRED WITH A SHARP POINTED TOOL.

THE 2" ∅ PIPE SLEEVE SHALL BE CUT FROM SCHEDULE 40 PVC PLASTIC PIPE. THE PVC PLASTIC PIPE SHALL MEET THE REQUIREMENTS OF ASTM D1785.

STEEL SOLE PLATES, ANCHOR BOLTS, NUTS, AND WASHERS SHALL BE GALVANIZED IN ACCORDANCE WITH THE STANDARD SPECIFICATIONS.

PRIOR TO WELDING, GRIND THE GALVANIZED SURFACE OF THE PORTION OF THE EMBEDDED PLATE AND SOLE PLATE THAT ARE TO BE WELDED. AFTER WELDING, DAMAGED GALVANIZED SURFACES SHALL BE REPAIRED IN ACCORDANCE WITH THE STANDARD SPECIFICATIONS.

WHEN WELDING THE SOLE PLATE TO THE EMBEDDED PLATE IN THE GIRDER, USE TEMPERATURE INDICATING WAX PENS, OR OTHER SUITABLE MEANS, TO ENSURE THAT THE TEMPERATURE OF THE SOLE PLATE DOES NOT EXCEED 300°F. TEMPERATURES ABOVE THIS MAY DAMAGE THE ELASTOMER.

SOLE PLATE "P", BOLTS, NUTS, WASHERS, AND PIPE SLEEVE SHALL BE INCLUDED IN THE PAY ITEM FOR PRESTRESSED CONCRETE GIRDERS.

ANCHOR BOLTS SHALL MEET THE REQUIREMENTS OF ASTM A449. NUTS SHALL MEET THE REQUIREMENTS OF AASHTO M291-DH OR AASHTO M292-2H. WASHERS SHALL MEET THE REQUIREMENTS OF AASHTO M293. SHOP DRAWINGS ARE NOT REQUIRED FOR ANCHOR BOLT, NUTS AND WASHERS. SHOP INSPECTION IS REQUIRED.

ALL SURFACES OF BEARING PLATES SHALL BE SMOOTH AND STRAIGHT.

THE ELASTOMER IN THE STEEL REINFORCED BEARINGS SHALL HAVE A SHEAR MODULUS OF 0.160 KSI, IN ACCORDANCE WITH AASHTO M251.

FOR STEEL REINFORCED ELASTOMERIC BEARINGS, SEE STANDARD SPECIFICATIONS.

ALL SOLE PLATES SHALL BE AASHTO M270 GRADE 36.

MAXIMUM ALLOWABLE SERVICE LOADS	
D.L.+L.L. (NO IMPACT)	
TYPE V	365 K

PROJECT NO. U-5899
FORSYTH COUNTY
STATION: 32+73.75 -L-

PREPARED BY
MOTT MACDONALD
7621 Parfey Rd., Suite 115
Fuquay-Varina, NC 27526
(919) 552-2575
License No. F-0669
www.mottmac.com

NORTH CAROLINA PROFESSIONAL SEAL 039313 ENGINEER
Kelly M. Robinson
31-Mar-2026

STATE OF NORTH CAROLINA
DEPARTMENT OF TRANSPORTATION
RALEIGH

ELASTOMERIC BEARING DETAILS

REVISIONS							SHEET NO.
NO.	BY:	DATE:	NO.	BY:	DATE:		S01-17
1			3				TOTAL SHEETS
2			4				36

DOCUMENT NOT CONSIDERED FINAL UNLESS ALL SIGNATURES COMPLETED

DRAWN BY :	L. L. BLANKENSHIP	DATE :	10-2023
CHECKED BY :	J. M. ROBINSON	DATE :	10-2023
DESIGN ENGINEER OF RECORD:	R. L. DICKE	DATE :	10-2023

8/26/21

1/29/2025 2:34:25 PM
R:\Structures\BRG_01_330747\Plans\401_033_U-5899_SMU_BG_S01-17_330747.dgn
WILSTOTT

Docusign Envelope ID: 16E2D990-30DC-440F-9F27-F28A276FE772

NOTES:

ALL REINFORCING STEEL IN END POSTS SHALL BE EPOXY COATED.

FOR DETAIL OF CONCRETE INSERT AND METAL RAIL ANCHOR ASSEMBLY, SEE "3 BAR METAL RAIL'' SHEET 4 OF 4.

FOR END POST QUANTITIES, SEE SUPERSTRUCTURE BILL OF MATERIALS.

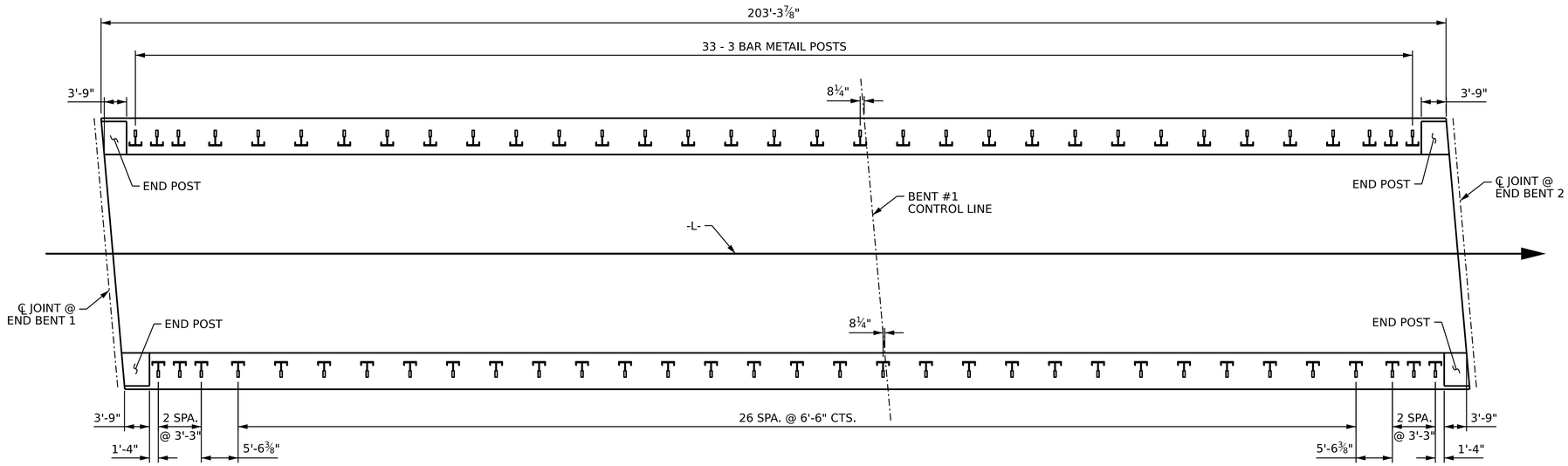

PLAN OF RAIL POST SPACINGS

(DIMENSIONS ARE TYPICAL EACH SIDE, EXCEPT AS NOTED)

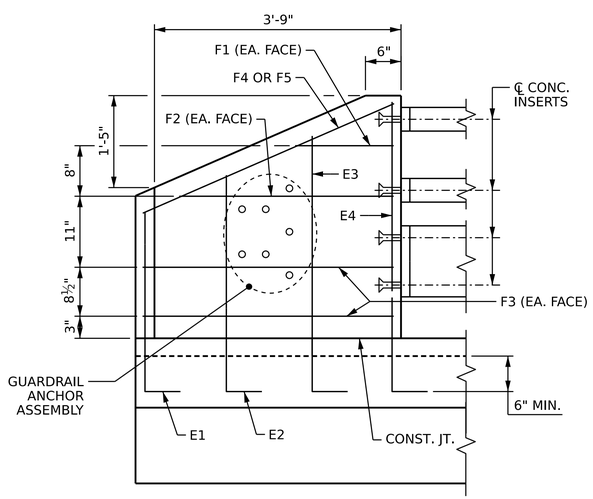

ELEVATION

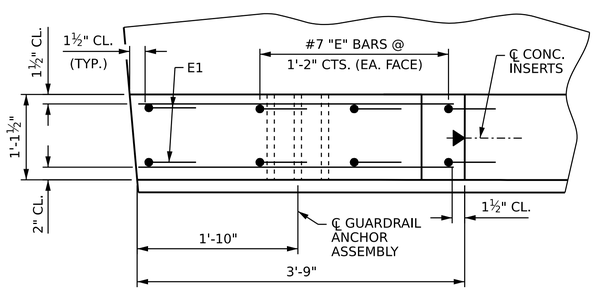

PLAN OF END POST

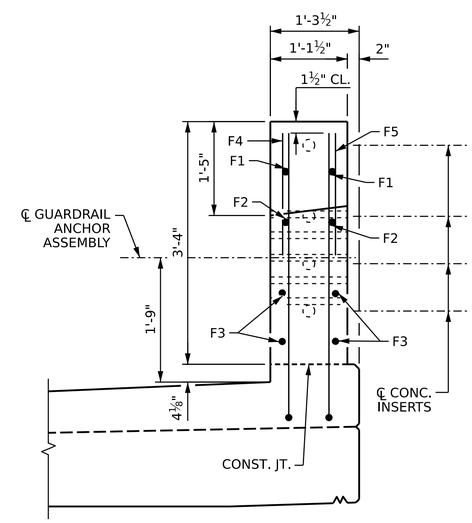

END VIEW

END POST DETAILS

PROJECT NO. U-5899

FORSYTH COUNTY

STATION: 32+73.75 -L-

SHEET 1 OF 4

PREPARED BY

MOTT MACDONALD
7621 Parfey Rd., Suite 115
Fuquay-Varina, NC 27526
(919) 552-2353
License No. F-0669
www.mottmac.com

NORTH CAROLINA PROFESSIONAL SEAL 039313 ENGINEER JOSHUA M. ROBINSON
DocuSigned by: Joshua M. Robinson
31-Mar-2025

STATE OF NORTH CAROLINA
DEPARTMENT OF TRANSPORTATION
RALEIGH

RAIL POST SPACING AND END POST DETAILS

REVISIONS						SHEET NO.
NO.	BY:	DATE:	NO.	BY:	DATE:	S01-18
1			3			TOTAL SHEETS
2			4			36

DOCUMENT NOT CONSIDERED FINAL UNLESS ALL SIGNATURES COMPLETED

DRAWN BY :	L. L. BLANKENSHIP	DATE :	10-2023
CHECKED BY :	J. . ROBINSON	DATE :	10-2023
DESIGN ENGINEER OF RECORD:	R. L. DICKE	DATE :	10-2023

1/27/2025 6:03:40 PM
R:\Structures\BRG_01_330747\Plans\401_035_U-5899_SMU_3MR_S01-18_330747.dgn
WI157077

Docusign Envelope ID: 16E2D990-30DC-440F-9F27-F28A276FE772

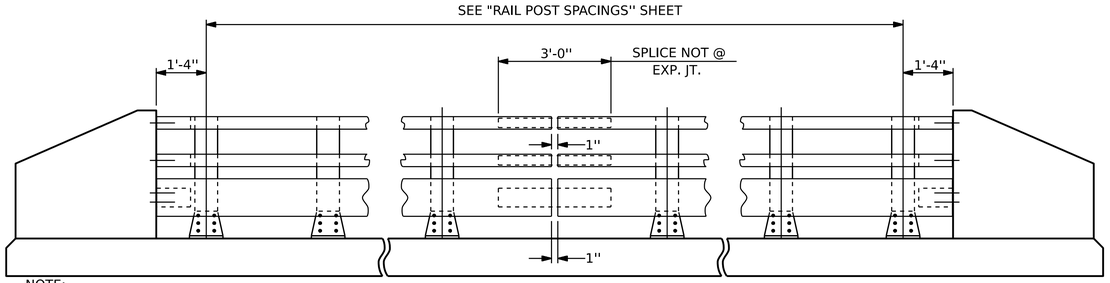

NOTE:
FOR ATTACHMENT OF METAL RAIL TO END POST, SEE STANDARD NO. BMR7.

ELEVATION

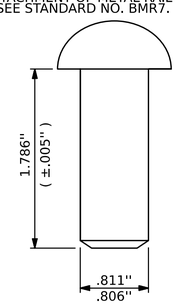

RIVET DETAIL

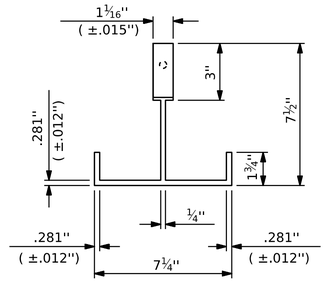

PLAN

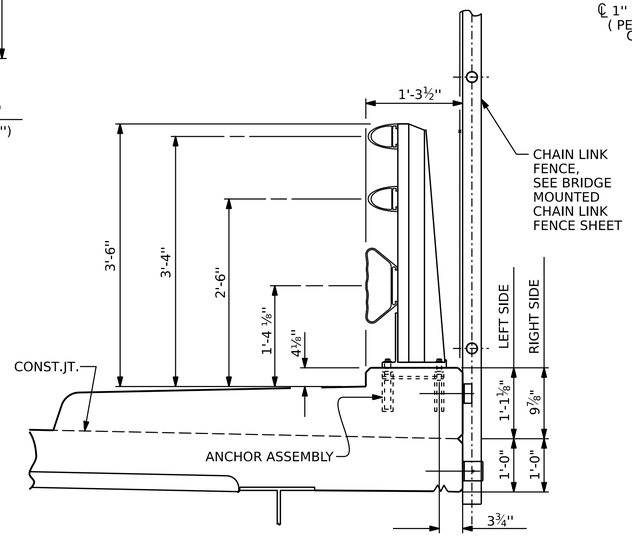

SECTION THRU RAIL

FOR ANCHOR ASSEMBLY, SEE "3 BAR METAL RAIL" STD.No.BMR6

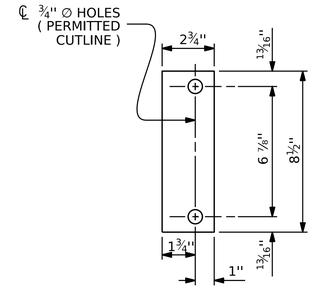

REAR PLATE

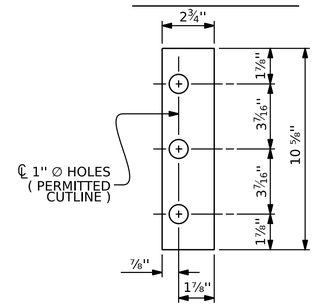

FRONT PLATE

SHIM DETAILS

NOTE : SHIMS MAY BE CUT ALONG PERMITTED CUTLINE OR SLOTTED TO EDGE OF PLATE TO FACILITATE PLACEMENT.

NOTES:

AT THE CONTRACTOR'S OPTION, METAL RAIL MAY BE EITHER ALUMINUM OR GALVANIZED STEEL IN ACCORDANCE WITH THE REQUIREMENTS OF THE GENERAL NOTES AND THE FOLLOWING SPECIFICATIONS FOR THE ALTERNATE MATERIALS; HOWEVER, THE CONTRACTOR WILL BE REQUIRED TO USE THE SAME RAIL MATERIAL ON ALL STRUCTURES ON THE PROJECT FOR WHICH METAL RAIL IS DESIGNATED.

ALUMINUM RAILS

MATERIAL FOR POSTS, BASES AND RAILS, EXPANSION BARS AND CLAMP BARS SHALL BE ASTM B221 ALLOY 6061-T6.

MATERIAL FOR RIVETS SHALL BE ASTM B316 ALLOY 6061-T6. RIVETS SHALL BE STANDARD BUTTON HEAD AND CONE POINT COLD DRIVEN AS PER DRAWING.

THE BASE OF RAIL POSTS, OR ANY OTHER ALUMINUM SURFACE IN CONTACT WITH CONCRETE SHALL BE THOROUGHLY COATED WITH AN ALUMINUM IMPREGNATED CAULKING COMPOUND OF APPROVED QUALITY.

MATERIAL FOR SHIMS TO BE ASTM B209 ALLOY 6061-T6.

GALVANIZED STEEL RAILS

MATERIAL AND GALVANIZING ARE TO CONFORM TO THE FOLLOWING SPECIFICATIONS:

POST, POST BASES, RAILS, EXPANSION BARS AND CLAMP BARS : AASHTO M270 GRADE 36 STRUCTURAL STEEL - GALVANIZED TO AASHTO M111.

RIVETS: RIVETS SHALL MEET THE REQUIREMENTS OF ASTM A502 FOR GRADE 1 RIVETS.

THE CUT ENDS OF GALVANIZED STEEL RAILING, AFTER GRINDING SMOOTH SHALL BE GIVEN TWO COATS OF ZINC RICH PAINT MEETING THE REQUIREMENTS OF FEDERAL SPECIFICATION MIL-P-26915 USAF TYPE 1, OR OF FEDERAL SPECIFICATIONS TT-P-641.

SHIMS: SHIMS SHALL MEET THE REQUIREMENTS OF ASTM A570 FOR GRADE 33 OR A611 FOR GRADE C AND SHALL BE GALVANIZED IN ACCORDANCE WITH AASHTO M111.

RAIL CAPS: RAIL CAPS SHALL MEET THE REQUIREMENTS OF ASTM A570 FOR GRADE 33 OR A611 FOR GRADE C AND SHALL BE GALVANIZED IN ACCORDANCE WITH AASHTO M111.

GENERAL NOTES

RAILING SHALL BE CONTINUOUS FROM END POST TO END POST OF BRIDGE. EACH JOINT IN RAIL LENGTH SHALL BE SPLICED AS DETAILED. PANEL LENGTHS OF RAIL SHALL BE ATTACHED TO A MINIMUM OF THREE POSTS. PLACE ONE JOINT SPLICE JUST BEYOND THE 3RD RAIL POST FROM EACH END, TYPICALLY 14' FROM THE END. PLACE OTHER JOINTS AS NEEDED.

FOR END OF RAIL TO CLEAR FACE OF CONCRETE END POST DIMENSION, SEE STANDARD NO. BMR7.

CAP SCREWS SHALL BE ASTM F593 ALLOY 305 STAINLESS STEEL. WASHERS FOR RAIL ATTACHMENT SHALL MEET THE REQUIREMENTS OF ASTM F844 EXCEPT THEY SHALL BE MADE FROM ALLOY 304 STAINLESS STEEL.

CERTIFIED MILL REPORTS ARE REQUIRED FOR RAILS AND POSTS. SHOP INSPECTION IS NOT REQUIRED.

METAL RAIL POSTS SHALL BE SET NORMAL TO CURB GRADE.

METHOD OF MEASUREMENT FOR METAL RAILS: FOR LENGTH OF METAL RAILS TO BE PAID FOR, SEE THE STANDARD SPECIFICATIONS.

CURVED RAIL USAGE: WHERE RAILS ARE TO BE USED ON BRIDGES ON HORIZONTAL AND/OR VERTICAL CURVATURE THE CONTRACTOR MAY, AT HIS OPTION, HAVE THE REQUIRED CURVATURE IN THE RAIL FORMED IN THE SHOP OR IN THE FIELD. IN EITHER EVENT, THE RAIL SHALL CONFORM WITHOUT BUCKLING OR KINKING TO THE REQUIRED CURVATURE IN A UNIFORM MANNER ACCEPTABLE TO THE ENGINEER.

TO INSURE FUTURE IDENTIFICATION OF THE FABRICATOR, A PERMANENT IDENTIFYING MARK SHALL BE PLACED ON EACH POST. THE METHOD OF MARKING AND LOCATION SHALL BE SUCH THAT IT DOES NOT DETRACT FROM THE APPEARANCE OF THE POST, BUT REMAIN VISIBLE AFTER RAIL PLACEMENT.

SHIMS SHALL BE USED AS NECESSARY FOR POST ALIGNMENT.

ALLOY 6351-T5 MAY BE SUBSTITUTED FOR ALLOY 6061-T6 WHERE APPLICABLE.

MINOR VARIATIONS IN DETAILS OF METAL RAIL WILL BE CONSIDERED. DETAILS OF SUCH VARIATIONS, IF DESIRED, SHALL BE SUBMITTED FOR APPROVAL.

PAY LENGTH = 391.5 LIN.FT.

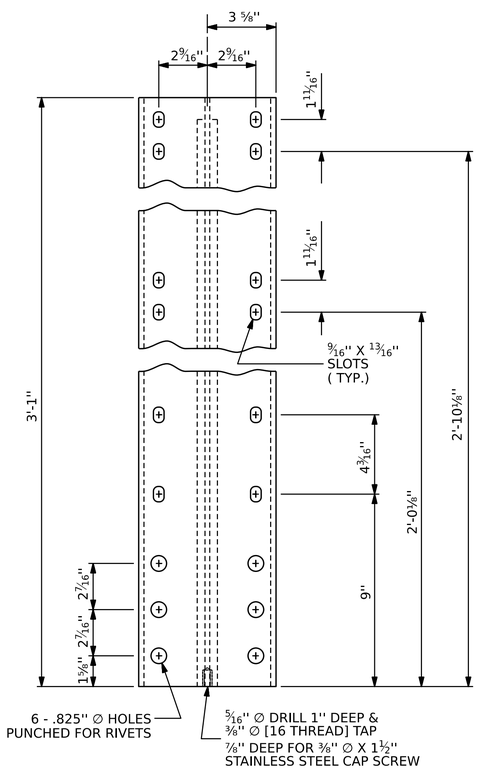

FRONT ELEVATION

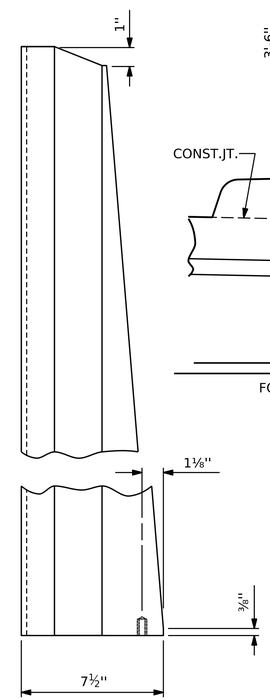

SIDE ELEVATION

DETAILS OF POST

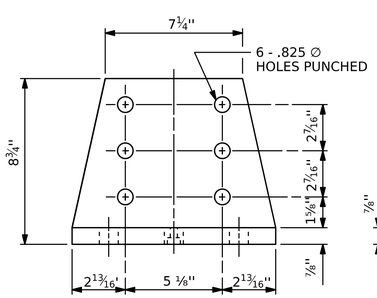

FRONT ELEVATION

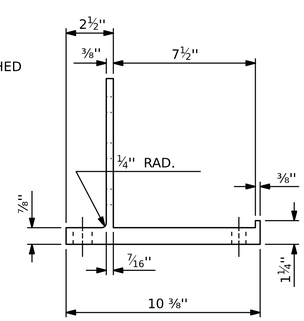

SIDE ELEVATION

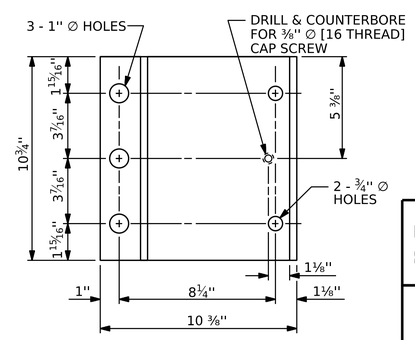

PLAN

POST BASE DETAILS

PROJECT NO. U-5899
FORSYTH COUNTY
STATION: 32+73.75 -L-

SHEET 2 OF 4

PREPARED BY
MOTT MACDONALD
7621 Parfey Rd., Suite 115
Fuquay-Varina, NC 27526
(919) 552-2353
License No. F-0669
www.mottmac.com

SEAL 039313
NORTH CAROLINA PROFESSIONAL ENGINEER SEAL
R. L. DICKE
DOCUSIGNED BY:
31-Mar-2023

STATE OF NORTH CAROLINA
DEPARTMENT OF TRANSPORTATION
RALEIGH

STANDARD
3 BAR METAL RAIL

REVISIONS							SHEET NO.
NO.	BY:	DATE:	NO.	BY:	DATE:		S01-19
1			3				TOTAL SHEETS
2			4				36

DRAWN BY : L. L. BLANKENSHIP DATE : 10-2023
CHECKED BY : J. M. ROBINSON DATE : 10-2023
DESIGN ENGINEER OF RECORD: R. L. DICKE DATE : 10-2023

DOCUMENT NOT CONSIDERED FINAL UNLESS ALL SIGNATURES COMPLETED

STD. NO. BMR5

1/27/2025 6:03:41 PM
R:\Structures\B6.01.330747\Plans\401_037_U-5899_SMU_3MR_S01-19_330747.dgn
WILSTOTT

Docusign Envelope ID: 16E2D990-30DC-440F-9F27-F28A276FE772

NOTES:

STRUCTURAL CONCRETE ANCHOR ASSEMBLY

THE STRUCTURAL CONCRETE ANCHOR ASSEMBLY SHALL CONSIST OF THE FOLLOWING COMPONENTS:

A. FERRULES SHALL BE MADE FROM STEEL MEETING THE REQUIREMENTS OF AASHTO M169, GRADE 12L14 AND SHALL HAVE A MINIMUM LENGTH OF THREADS OF 2" FOR ¾" FERRULES AND 1¾" FOR ⅝" FERRULES.

B. 3 - ¾" ∅ X 2½" BOLTS WITH WASHERS. BOLTS SHALL CONFORM TO THE REQUIREMENTS OF ASTM A307. BOLTS AND WASHERS SHALL BE GALVANIZED. AT THE CONTRACTOR'S OPTION, STAINLESS STEEL BOLTS AND WASHERS MAY BE USED AS AN ALTERNATE FOR THE ¾" ∅ X 2½" GALVANIZED BOLTS AND WASHERS. THEY SHALL CONFORM TO OR EXCEED THE MECHANICAL REQUIREMENTS OF ASTM A307. THE USE OF THIS ALTERNATE SHALL BE APPROVED BY THE ENGINEER.

C. 2 - ⅝" ∅ X 2¼" BOLTS WITH WASHERS. BOLTS SHALL CONFORM TO THE REQUIREMENTS OF ASTM A307. BOLTS AND WASHERS SHALL BE GALVANIZED. AT THE CONTRACTOR'S OPTION, STAINLESS STEEL BOLTS AND WASHERS MAY BE USED AS AN ALTERNATE FOR THE ⅝" ∅ X 2¼" GALVANIZED BOLTS AND WASHERS. THEY SHALL CONFORM TO OR EXCEED THE MECHANICAL REQUIREMENTS OF ASTM A307. THE USE OF THIS ALTERNATE SHALL BE APPROVED BY THE ENGINEER.

D. WIRE STRUT SHOWN IN THE CONCRETE ANCHOR ASSEMBLY DETAIL IS THE MINIMUM ALLOWABLE SIZE AND SHALL HAVE A MINIMUM TENSILE STRENGTH OF 100,000 PSI. AS AN OPTION, A 7/16" ∅ WIRE STRUT WITH A MINIMUM TENSILE STRENGTH OF 90,000 PSI IS ACCEPTABLE.

E. THE METAL RAIL ANCHOR ASSEMBLIES TO BE HOT DIPPED GALVANIZED TO CONFORM TO REQUIREMENTS OF AASHTO M111.

F. THE COST OF THE METAL RAIL ANCHOR ASSEMBLY WITH BOLTS AND WASHERS COMPLETE IN PLACE SHALL BE INCLUDED IN THE PRICE BID FOR LINEAR FEET OF METAL RAIL.

G. BOLTS TO BE TIGHTENED ONE-HALF TURN WITH A WRENCH FROM A FINGER-TIGHT POSITION.

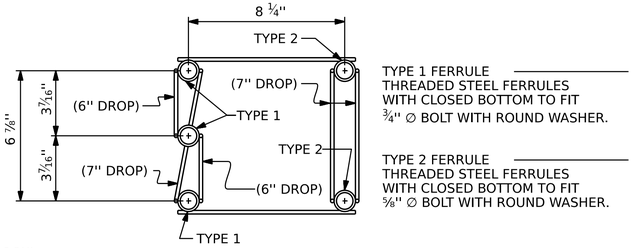

PLAN

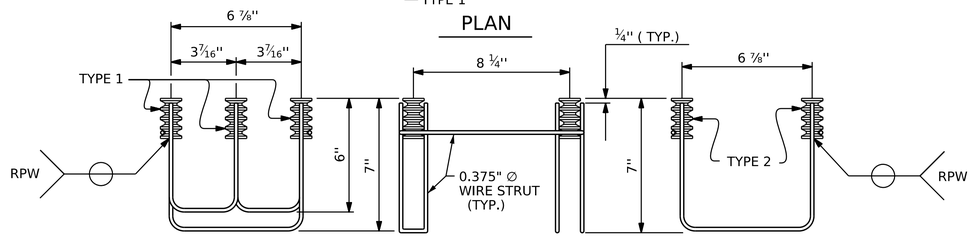

LEFT SIDE VIEW | ELEVATION | RIGHT SIDE VIEW

5-BOLT METAL RAIL ANCHOR ASSEMBLY

(66 ASSEMBLIES REQUIRED)

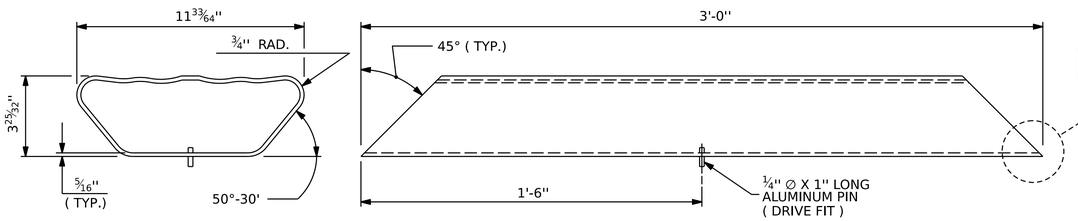

END VIEW | PLAN VIEW

BOTTOM RAIL EXPANSION BAR

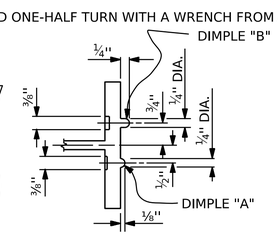

SECTION B-B

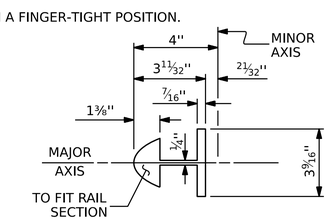

BAR SECTION

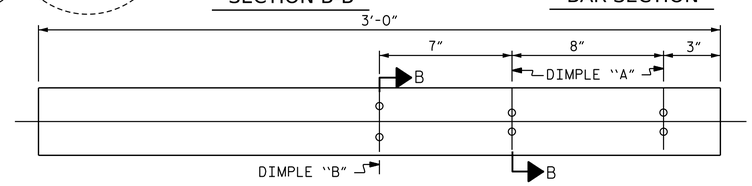

BACK ELEVATION

TOP & MIDDLE RAIL EXPANSION BAR

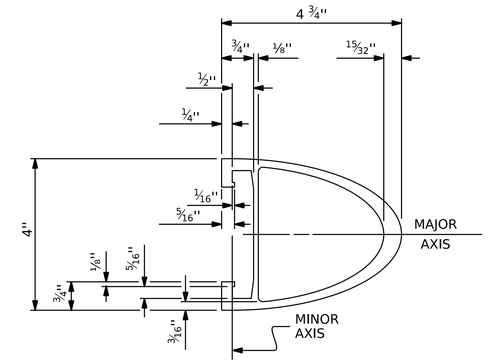

TOP & MIDDLE RAIL SECTION

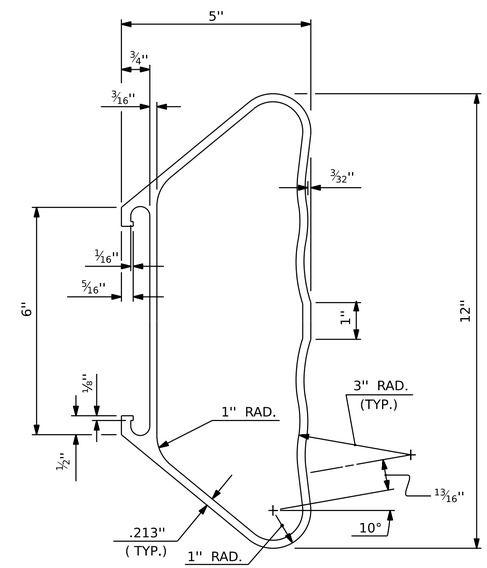

BOTTOM RAIL SECTION

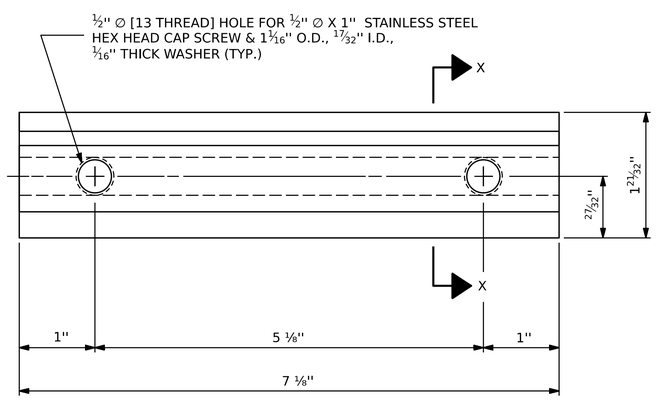

ELEVATION

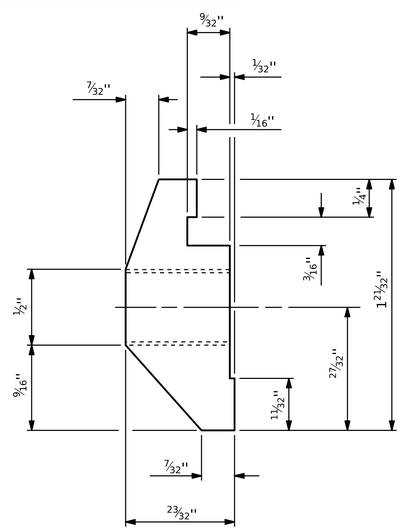

SECTION X-X

CLAMP BAR DETAIL

(6 REQUIRED PER POST)

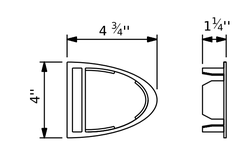

TOP & MIDDLE RAIL CAP

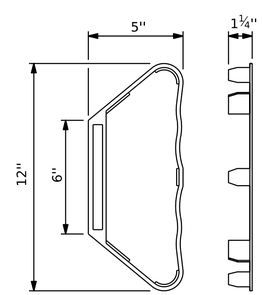

BOTTOM RAIL CAP

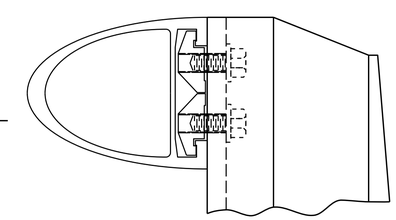

CLAMP ASSEMBLY

TOP RAIL SHOWN
(MIDDLE & BOTTOM RAIL ARE SIMILAR)

PROJECT NO. U-5899

FORSYTH COUNTY

STATION: 32+73.75 -L-

SHEET 3 OF 4

PREPARED BY

MOTT MACDONALD

7621 Parfey Rd., Suite 115
Fuquay-Varina, NC 27526
(919) 552-2353
License No. F-0669
www.mottmac.com

NORTH CAROLINA PROFESSIONAL SEAL 039313 ENGINEER
31-Mar-2023

STATE OF NORTH CAROLINA
DEPARTMENT OF TRANSPORTATION
RALEIGH

STANDARD

3 BAR METAL RAIL

REVISIONS								SHEET NO.
NO.	BY:	DATE:	NO.	BY:	DATE:			S01-20
1			3					TOTAL SHEETS
2			4					36

DOCUMENT NOT CONSIDERED FINAL UNLESS ALL SIGNATURES COMPLETED

DRAWN BY :	L. L. BLANKENSHIP	DATE : 10-2023
CHECKED BY :	J. M. ROBINSON	DATE : 10-2023
DESIGN ENGINEER OF RECORD:	R. L. DICKE	DATE : 10-2023

1/27/2025 6:08:41 PM
R:\Structures\BRG_01_330747\Plans\401_039_U-5899_SMU_3MR_S01-20_330747.dgn
WILSTOTT

STD. NO. BMR6

Docusign Envelope ID: 16E2D990-30DC-440F-9F27-F28A276FE772

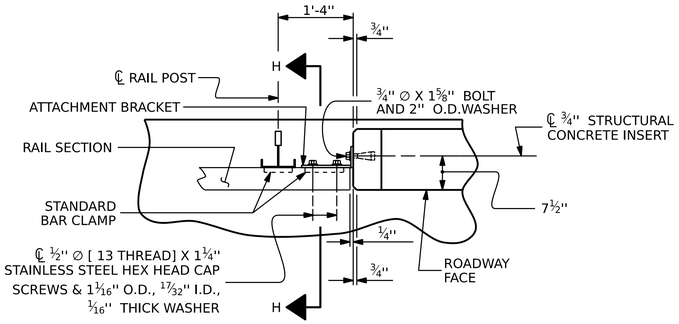

PLAN OF RAIL AND END POST

(STIFFENER ON ½" ℙ NOT SHOWN FOR CLARITY)

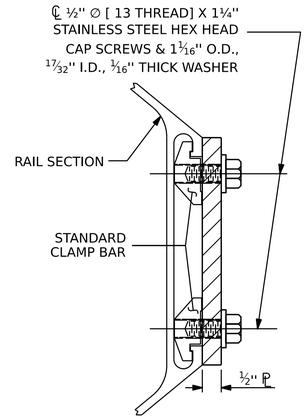

SECTION H-H

(FOR BOTTOM RAIL)

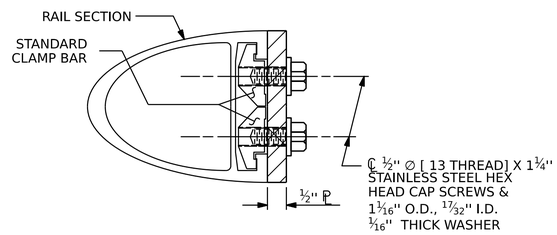

SECTION H-H

(FOR TOP & MIDDLE RAIL)

NOTES:

METAL RAIL TO END POST CONNECTION

THE METAL RAIL TO END POST CONNECTION SHALL CONSIST OF THE FOLLOWING COMPONENTS:

A. ½" PLATES SHALL CONFORM TO AASHTO M270 GRADE 36 AND SHALL BE GALVANIZED AFTER FABRICATION.

B. ¾" STRUCTURAL CONCRETE INSERT SHALL HAVE A WORKING LOAD SHEAR CAPACITY OF 4800 LBS. THE FERRULES SHALL ENGAGE A ¾" ∅ X 1⅝" BOLT WITH 2" O.D. WASHER IN PLACE. THE ¾" ∅ X 1⅝" BOLT SHALL HAVE N. C. THREADS.

C. CAP SCREWS FOR RAIL ATTACHMENT TO ANGLE SHALL CONFORM TO THE REQUIREMENTS OF ASTM F593 ALLOY 305 STAINLESS STEEL. CAP SCREWS TO BE CENTERED IN SLOTS AT 60°F. WASHERS FOR RAIL ATTACHMENT SHALL MEET THE REQUIREMENTS OF ASTM F844 EXCEPT THEY SHALL BE MADE FROM ALLOY 304 STAINLESS STEEL.

D. STANDARD CLAMP BARS (STD. No. BMR6).

THE COST OF THE STANDARD CLAMP BARS AND CAP SCREWS USED IN THE METAL RAIL TO END POST CONNECTION SHALL BE INCLUDED IN THE UNIT CONTRACT PRICE BID FOR LINEAR FEET OF 3 BAR METAL RAIL.

THE ¾" STRUCTURAL CONCRETE INSERT WITH BOLT SHALL BE ASSEMBLED IN THE SHOP.

THE COST OF THE ¾" STRUCTURAL CONCRETE INSERT ASSEMBLY, AND THE ½" PLATES COMPLETE IN PLACE SHALL BE INCLUDED IN THE VARIOUS PAY ITEMS.

THE CONTRACTOR, AT HIS OPTION, MAY USE AN ADHESIVE BONDING SYSTEM IN LIEU OF THE STRUCTURAL CONCRETE INSERT EMBEDDED IN THE END POST. IF THE ADHESIVE BONDING SYSTEM IS USED, THE ¾" ∅ X 1⅝" BOLT WITH WASHER SHALL BE REPLACED WITH A ¾" ∅ X 6 ½" BOLT AND 2" O.D.WASHER. ALL SPECIFICATIONS THAT APPLY TO THE ¾" ∅ X 1⅝" BOLT SHALL APPLY TO THE ¾" ∅ X 6 ½" BOLT. FIELD TESTING OF THE ADHESIVE BONDING SYSTEM IS NOT REQUIRED.

NOTES:

STRUCTURAL CONCRETE INSERT

THE STRUCTURAL CONCRETE INSERT ASSEMBLY SHALL CONSIST OF THE FOLLOWING COMPONENTS:

A. FERRULES SHALL BE MADE FROM STEEL MEETING THE REQUIREMENTS OF AASHTO M169, GRADE 12L14 AND SHALL HAVE A MINIMUM LENGTH OF THREADS OF 1½".

B. 1 - ¾" ∅ X 1⅝" BOLT WITH WASHER. BOLT SHALL CONFORM TO THE REQUIREMENTS OF ASTM A307. BOLT AND WASHER SHALL BE GALVANIZED. AT THE CONTRACTORS OPTION, STAINLESS STEEL BOLT AND WASHER MAY BE USED AS AN ALTERNATE FOR THE ¾" ∅ X 1⅝" GALVANIZED BOLT AND WASHER. THEY SHALL CONFORM TO OR EXCEED THE MECHANICAL REQUIREMENTS OF ASTM A307. THE USE OF THIS ALTERNATE SHALL BE APPROVED BY THE ENGINEER.

C. WIRE STRUT SHOWN IN THE CONCRETE INSERT ASSEMBLY DETAIL IS THE MINIMUM ALLOWABLE SIZE AND SHALL HAVE A MINIMUM TENSILE STRENGTH OF 100,000 PSI. AS AN OPTION, A ⁷⁄₁₆" ∅ WIRE STRUT WITH A MINIMUM TENSILE STRENGTH OF 90,000 PSI IS ACCEPTABLE.

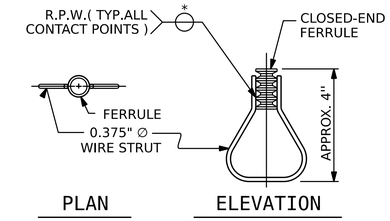

STRUCTURAL CONCRETE INSERT

* EACH WELDED ATTACHMENT OF WIRE TO FERRULE SHALL DEVELOP THE TENSILE STRENGTH OF THE WIRE.

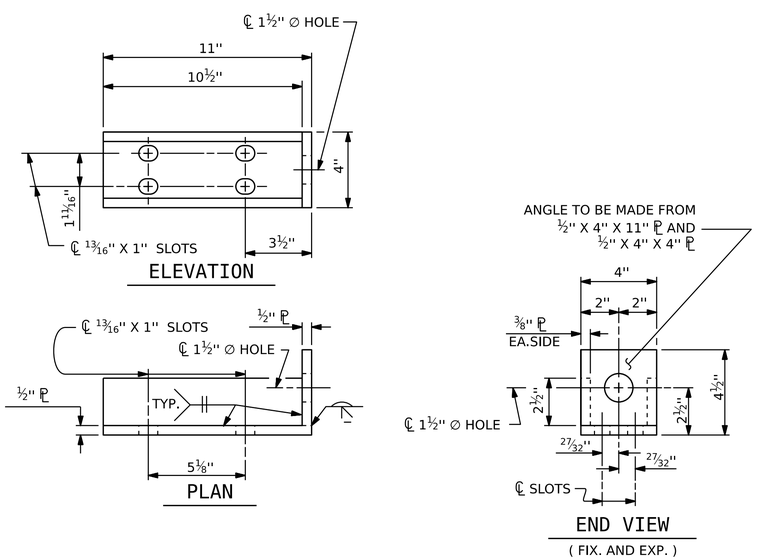

(FIX. AND EXP.)

DETAILS FOR ATTACHMENT BRACKET

(TOP & MIDDLE RAIL ONLY)

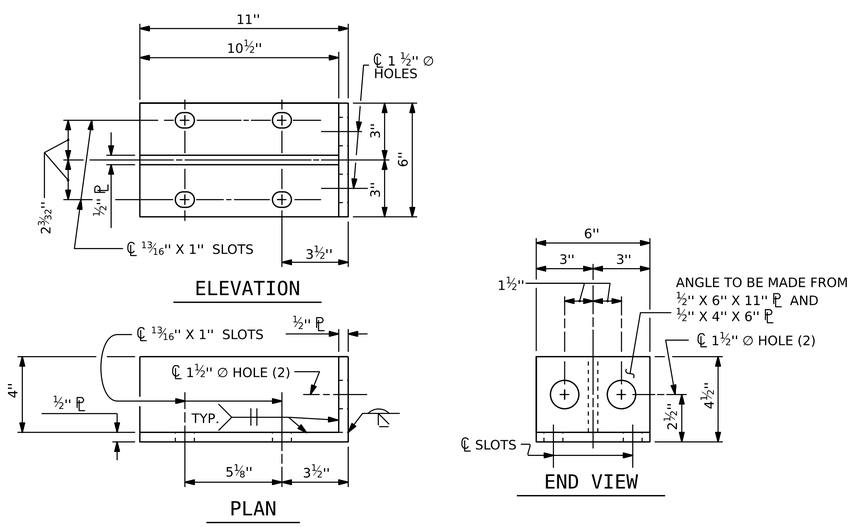

DETAILS FOR ATTACHMENT BRACKET

(BOTTOM RAIL ONLY)

PROJECT NO. U-5899

FORSYTH COUNTY

STATION: 32+73.75 -L-

SHEET 4 OF 4

PREPARED BY

MOTT MACDONALD

7621 Parkway Rd., Suite 115
Fuquay-Varina, NC 27526
(919) 552-2353
License No. F-0669
www.mottmac.com

NORTH CAROLINA PROFESSIONAL SEAL 039313 ENGINEER JOSHUA M. ROBINSON
31-Mar-2023

STATE OF NORTH CAROLINA
DEPARTMENT OF TRANSPORTATION
RALEIGH

STANDARD

3 BAR METAL RAIL

REVISIONS						SHEET NO.
NO.	BY:	DATE:	NO.	BY:	DATE:	S01-21
1			3			TOTAL SHEETS
2			4			36

DOCUMENT NOT CONSIDERED FINAL UNLESS ALL SIGNATURES COMPLETED

DRAWN BY :	L. L. BLANKENSHIP	DATE :	10-2023
CHECKED BY :	J. M. ROBINSON	DATE :	10-2023
DESIGN ENGINEER OF RECORD:	R. L. DICKE	DATE :	10-2023

1/27/2025 6:03:42 PM
R:\Structures\BRG_01_530747\Plans\401_041_U-5899_SMU_3MR_S01-21_330747.dgn
W115707

STD. NO. BMR7

Docusign Envelope ID: 16E2D990-30DC-440F-9F27-F28A276FE772

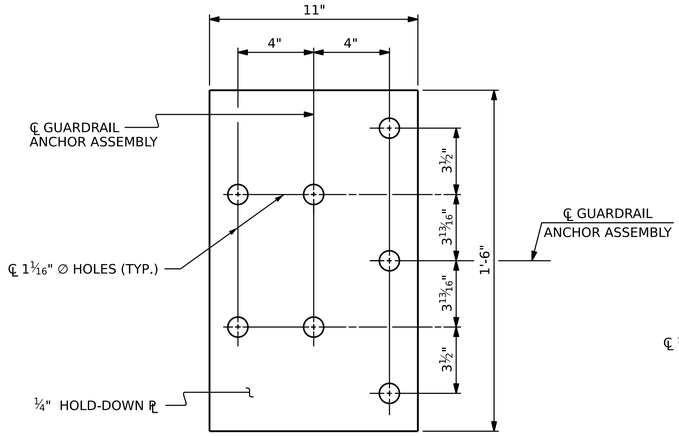

PLAN

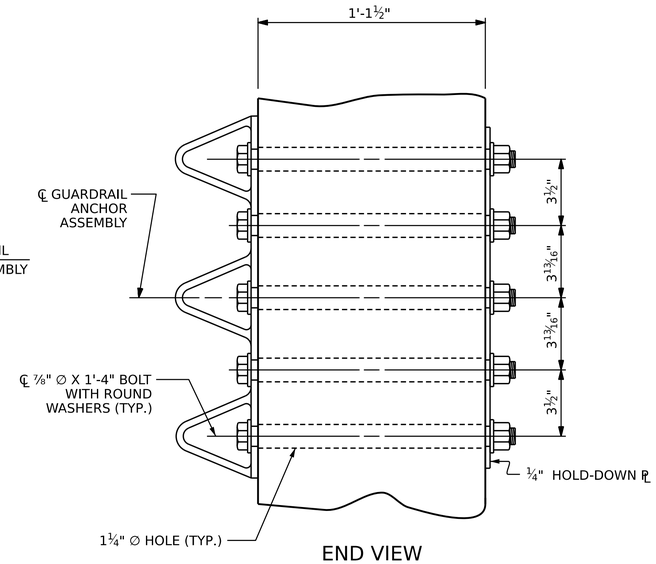

END VIEW

GUARDRAIL ANCHOR ASSEMBLY DETAILS

NOTES:

THE GUARDRAIL ANCHOR ASSEMBLY SHALL CONSIST OF A ¼" HOLD DOWN PLATE AND 7 - ⅞" ∅ BOLTS WITH NUTS AND WASHERS.

THE HOLD-DOWN PLATE SHALL CONFORM TO AASHTO M270 GRADE 36. AFTER FABRICATION, THE HOLD-DOWN PLATE SHALL BE HOT-DIP GALVANIZED IN ACCORDANCE WITH AASHTO M111.

BOLTS SHALL CONFORM TO THE REQUIREMENTS OF ASTM A307 AND NUTS SHALL CONFORM TO THE REQUIREMENTS OF AASHTO M291. BOLTS, NUTS AND WASHERS SHALL BE GALVANIZED. AT THE CONTRACTOR'S OPTION, STAINLESS STEEL BOLTS, NUTS AND WASHERS MAY BE USED AS AN ALTERNATE FOR THE ⅞" ∅ GALVANIZED BOLTS, NUTS AND WASHERS. THEY SHALL CONFORM TO OR EXCEED THE MECHANICAL REQUIREMENTS OF ASTM A307. THE USE OF THIS ALTERNATE SHALL BE APPROVED BY THE ENGINEER.

THE GUARDRAIL ANCHOR ASSEMBLY IS REQUIRED AT ALL POINTS WHERE APPROACH GUARDRAIL IS TO BE ATTACHED TO THE END OF THE PARAPET. FOR POINTS OF ATTACHMENT, SEE SKETCH.

AFTER INSTALLATION, THE EXPOSED THREAD OF THE BOLT SHALL BE BURRED WITH A SHARP POINTED TOOL.

THE COST OF THE GUARDRAIL ANCHOR ASSEMBLIES WITH BOLTS, NUTS AND WASHERS COMPLETE IN PLACE, SHALL BE INCLUDED IN THE VARIOUS PAY ITEMS.

THE VERTICAL REINFORCING BARS MAY BE SHIFTED SLIGHTLY IN THE END POST TO CLEAR ASSEMBLY BOLTS.

THE 1 ¼" ∅ HOLES SHALL BE FORMED OR DRILLED WITH A CORE BIT. IMPACT TOOLS WILL NOT BE PERMITTED. ANY CONCRETE DAMAGED BY THIS WORK SHALL BE REPAIRED TO THE SATISFACTION OF THE ENGINEER.

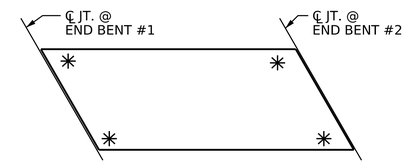

SKETCH SHOWING POINTS OF ATTACHMENT

* LOCATION OF GUARDRAIL ATTACHMENT

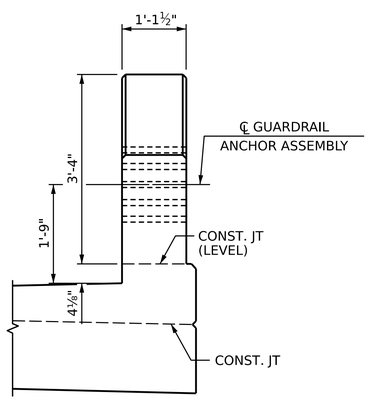

END VIEW
(THREE BAR METAL RAIL)

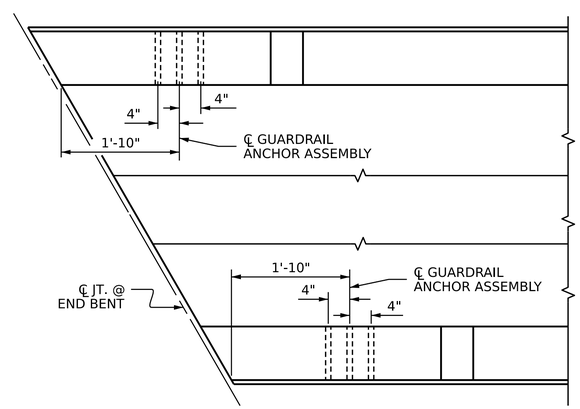

PLAN

LOCATION OF GUARDRAIL ANCHOR AT END POST

PROJECT NO. U-5899
FORSYTH COUNTY
STATION: 32+73.75 -L-

PREPARED BY
MOTT MACDONALD
7621 Parfrey Rd., Suite 115
Fuquay-Varina, NC 27526
(919) 552-2353
License No. F-0669
www.mottmac.com

NORTH CAROLINA PROFESSIONAL SEAL 039313 ENGINEER
JAMES M. ROBINSON
31-Mar-2025

STATE OF NORTH CAROLINA
DEPARTMENT OF TRANSPORTATION
RALEIGH

GUARDRAIL ANCHORAGE DETAILS FOR 3 BAR METAL RAIL

REVISIONS						SHEET NO.
NO.	BY:	DATE:	NO.	BY:	DATE:	S01-22
1			3			TOTAL SHEETS
2			4			36

DOCUMENT NOT CONSIDERED FINAL UNLESS ALL SIGNATURES COMPLETED

DRAWN BY :	L. L. BLANKENSHIP	DATE :	10-2023
CHECKED BY :	J. M. ROBINSON	DATE :	10-2023
DESIGN ENGINEER OF RECORD:	R. L. DICKE	DATE :	10-2023

1/27/2025 6:03:43 PM
R:\Structures\BRG_01_530747\Plans\401_043_U-5899_SMU_GR_S01-22_330747.dgn
WILS7077

Docusign Envelope ID: 16E2D990-30DC-440F-9F27-F28A276FE772

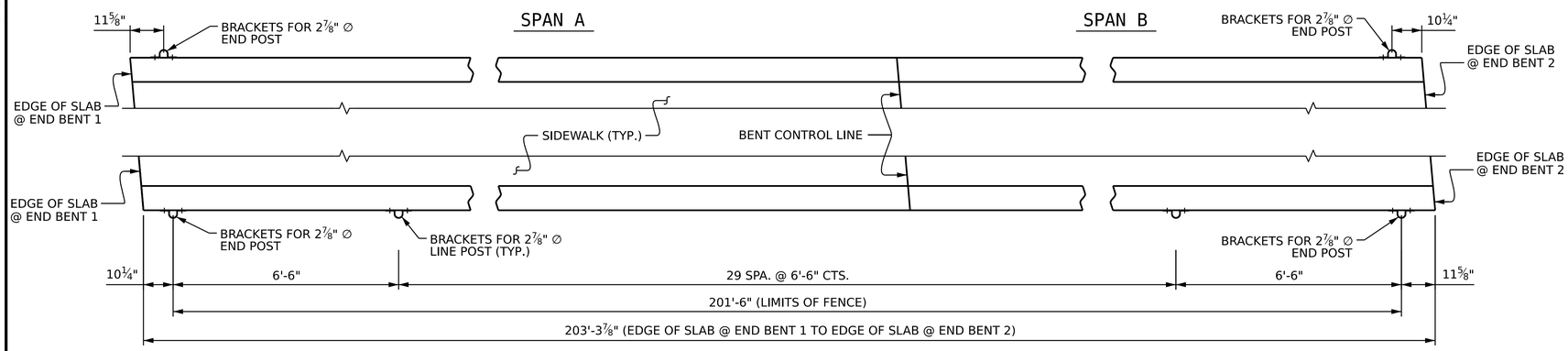

PLAN OF FENCE POST SPACING

PAY LENGTH = 403 LIN. FT.

(DIMENSIONS ARE TYPICAL EACH SIDE, EXCEPT AS NOTED)

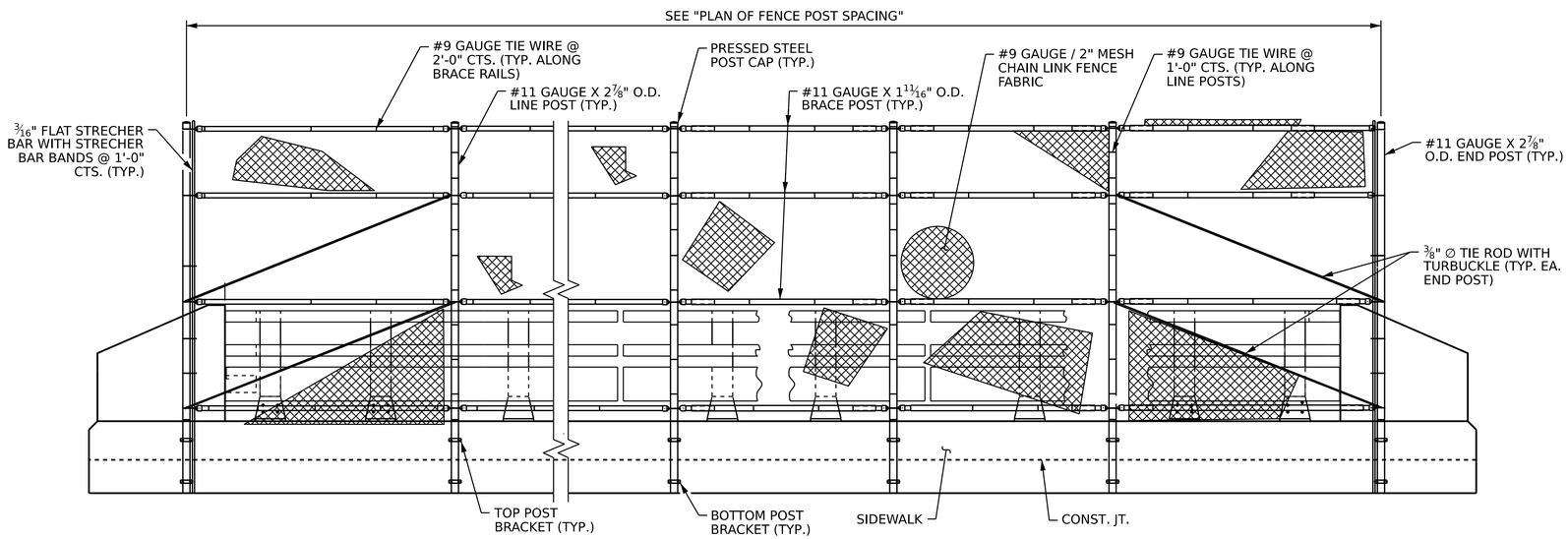

ELEVATION

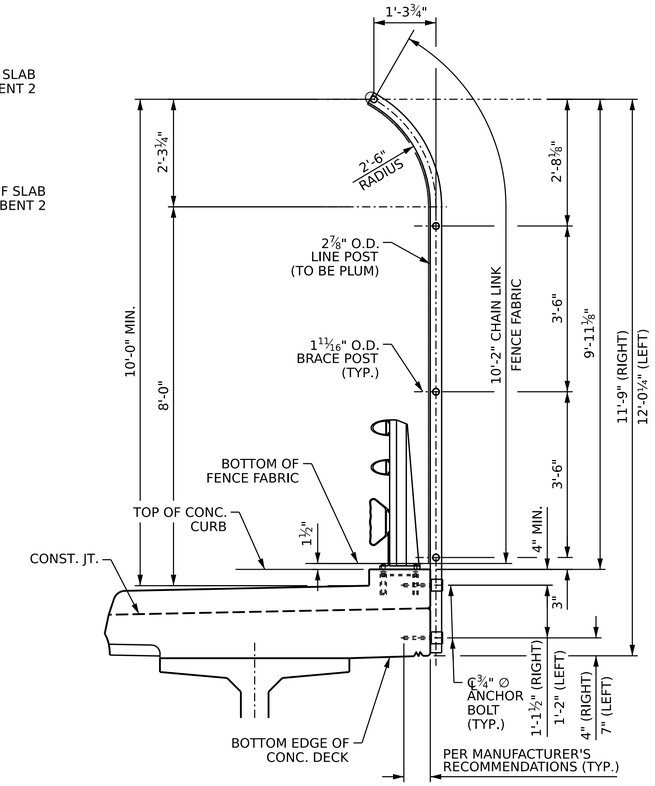

SECTION THRU RAIL

(RIGHT SIDE SHOWN, LEFT SIDE SIMILAR)

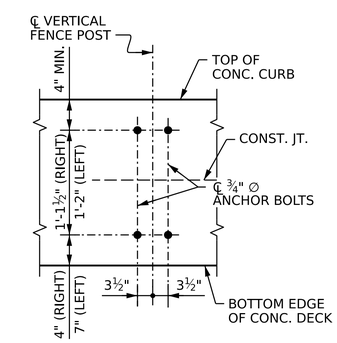

BOLT SETTING DETAIL

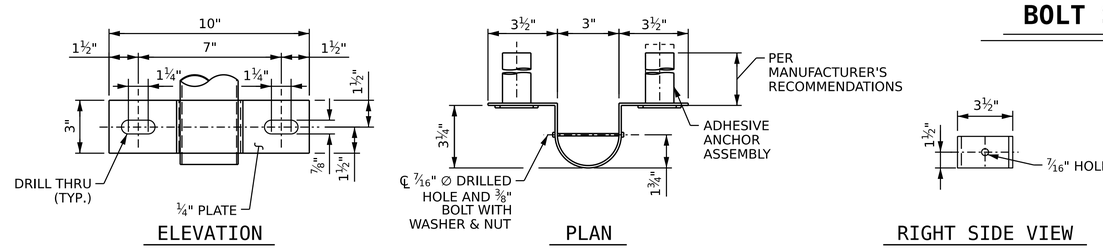

BRACKET DETAILS

NOTES:

FOR BRIDGE MOUNTED CHAIN LINK FENCE, SEE SPECIAL PROVISIONS.

MATERIAL FOR ANCHOR BOLTS SHALL BE TYPE 304 STAINLESS STEEL WITH A MINIMUM 90000 PSI ULTIMATE STRENGTH. NUTS AND WASHERS SHALL BE TYPE 304 STAINLESS STEEL. ANCHOR BOLTS SHALL BE EMBEDDED AS PER ADHESIVE BONDING SYSTEM MANUFACTURER SPECIFICATIONS. NUTS SHALL BE AMERICAN STANDARD FINISHED HEXAGON THICK NUTS, CLASS 2B THREADS.

FOR SETTING ANCHOR BOLTS, THE CONTRACTOR SHALL USE AN ADHESIVE BONDING SYSTEM. SEE SECTION 420-13 OF THE STANDARD SPECIFICATIONS FOR ADHESIVELY ANCHORED ANCHOR BOLTS OR DOWELS. LEVEL ONE FIELD TESTING OF BONDING SYSTEM IS REQUIRED.

ALL FENCE MATERIALS SHALL MEET THE REQUIREMENTS OF SECTION 1050 OF THE STANDARD SPECIFICATIONS, GALVANIZE ALL STEEL PARTS AND HARDWARE IN ACCORDANCE WITH ARTICLE 1076 OF THE STANDARD SPECIFICATIONS.

WELDING SHALL BE DONE IN ACCORDANCE WITH ARTICLE 1072-18 OF STANDARD SPECIFICATIONS.

ADHESIVE BONDING SYSTEM SHALL HAVE MINIMUM PULLOUT STRENGTH OF 10 KIPS. THE ADHESIVE BONDING SYSTEM SHALL BE CHOSEN FROM THOSE ON THE NCDOT APPROVED PRODUCT LIST.

PROJECT NO. U-5899
FORSYTH COUNTY
STATION: 32+73.75 -L-

PREPARED BY
MOTT MACDONALD
7621 Parfey Rd., Suite 115
Fuquay-Varina, NC 27526
(919) 552-2353
License No. F-0669
www.mottmac.com

NORTH CAROLINA PROFESSIONAL SEAL 039313 ENGINEER JUSTIN M. ROBINSON
DocuSigned by: Justin M. Robinson
31-MAY-2023

STATE OF NORTH CAROLINA
DEPARTMENT OF TRANSPORTATION
RALEIGH

BRIDGE MOUNTED CHAIN LINK FENCE

REVISIONS								SHEET NO.
NO.	BY:	DATE:	NO.	BY:	DATE:			S01-23
1			3					TOTAL SHEETS
2			4					36

DRAWN BY : N. K. KAVANI DATE : 12-2023
CHECKED BY : J. M. ROBINSON DATE : 12-2023
DESIGN ENGINEER OF RECORD: J. M. ROBINSON DATE : 12-2023

DOCUMENT NOT CONSIDERED FINAL UNLESS ALL SIGNATURES COMPLETED

1/27/2025 6:03:43 PM
R:\Structures\BRG_01_330747\Plans\401_045_U-5899_SMU_CLF_S01-23_330747.dgn
W15707

Docusign Envelope ID: 16E2D990-30DC-440F-9F27-F28A276FE772

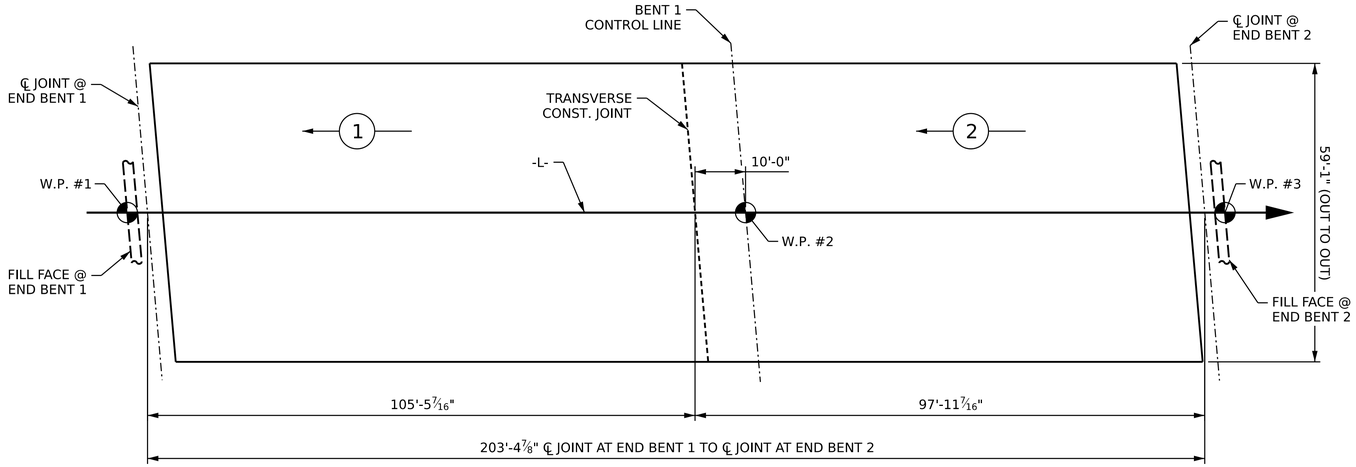

POURING SEQUENCE AND LAYOUT FOR COMPUTING AREA OR REINFORCED CONCRETE DECK SLAB

(12,018 SF)

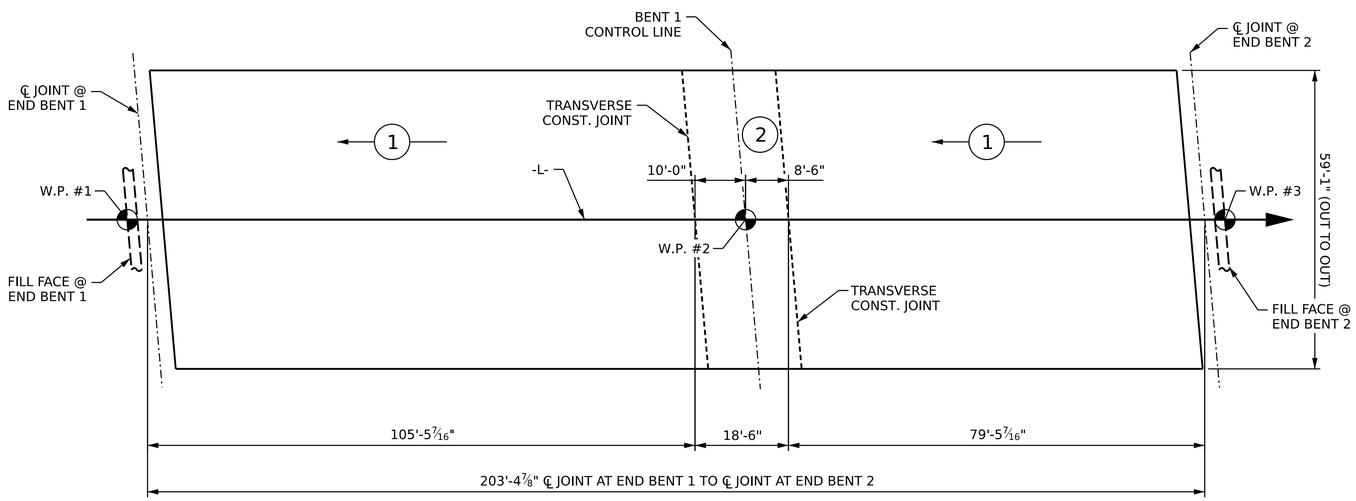

OPTIONAL POURING SEQUENCE

(POUR 2 CAN NOT BE STARTED UNTIL BOTH ADJACENT 1 POURS REACH A MINIMUM OF 3000 PSI)

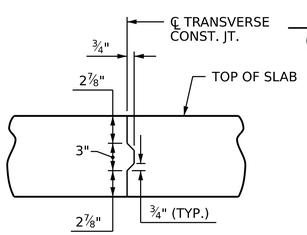

TRANSVERSE CONSTRUCTION JOINT DETAIL

NOTE: REINFORCING STEEL IN SLAB NOT SHOWN.
LONGITUDINAL REINFORCING STEEL SHALL BE CONTINUOUS THRU JOINT

GROOVING BRIDGE FLOORS		
APPROACH SLABS	2029	SQ.FT.
BRIDGE DECK	9700	SQ.FT.
TOTAL	11729	SQ.FT.

SUPERSTRUCTURE REINFORCING STEEL LENGTHS ARE BASED ON THE FOLLOWING MINIMUM SPLICE LENGTHS

BAR SIZE	SUPERSTRUCTURE EXCEPT APPROACH SLABS, PARAPET, AND BARRIER RAIL		APPROACH SLABS		PARAPET AND BARRIER RAIL
	EPOXY COATED	UNCOATED	EPOXY COATED	UNCOATED	
#4	1'-11"	1'-7"	1'-11"	1'-7"	2'-6"
#5	2'-5"	2'-0"	2'-5"	2'-0"	3'-1"
#6	2'-10"	2'-5"	3'-7"	2'-5"	3'-8"
#7	4'-2"	2'-9"			
#8	4'-9"	3'-2"			

BILL OF MATERIAL

	BAR	NO.	SIZE	TYPE	LENGTH	WEIGHT
*	A1	348	#5	STR	58'-11"	21385
	A2	348	#5	STR	58'-11"	21385
*	B1	80	#4	STR	39'-9"	2124
	B2	192	#5	STR	52'-3"	10463
*	B3	80	#4	STR	30'-2"	1612
*	B4	80	#6	STR	37'-0"	4446
*	B5	78	#6	STR	40'-7"	4755
	B6	35	#5	STR	50'-10"	1856
*	G1	2	#5	STR	58'-11"	123
*	K1	8	#8	1	13'-10"	295
*	K2	16	#8	2	22'-0"	940
*	K3	20	#6	STR	6'-0"	180
*	K4	20	#4	STR	9'-5"	126
*	S1	60	#5	4	6'-3"	391
*	S2	40	#5	3	3'-6"	146
*	S3	60	#4	5	3'-2"	127

REINFORCING STEEL = 33,704 LBS
* EPOXY COATED REINFORCING STEEL = 36,650 LBS

SIDEWALK QUANTITY

	BAR	NO.	SIZE	TYPE	LENGTH	WEIGHT
*	B8	72	#4	STR	35'-5"	1703
*	G3	410	#4	STR	6'-2"	1689
*	U1	116	#4	6	3'-4"	258

* EPOXY COATED REINFORCING STEEL = 3,650 LBS

MEDIAN QUANTITY

	BAR	NO.	SIZE	TYPE	LENGTH	WEIGHT
*	A4	136	#4	STR	12'-0"	1090
*	B9	54	#4	STR	35'-3"	1272

* EPOXY COATED REINFORCING STEEL = 2,362 LBS

END POST QUANTITY

FOR 1 END POSTS (4 REQ'D)

	BAR	NO.	SIZE	TYPE	LENGTH	WEIGHT
*	E1	2	#7	7	3'-5"	14
*	E2	2	#7	7	4'-0"	16
*	E3	2	#7	7	4'-7"	19
*	E4	2	#7	7	5'-0"	20
*	F1	2	#6	STR	1'-5"	4
*	F2	2	#6	STR	2'-11"	9
*	F3	4	#6	STR	3'-6"	21
*	F4	1	#6	STR	3'-11"	6
*	F5	1	#6	STR	3'-9"	6

* EPOXY COATED REINFORCING STEEL 115 LBS.

CLASS AA CONCRETE: 0.5 CU. YDS.

BAR TYPES

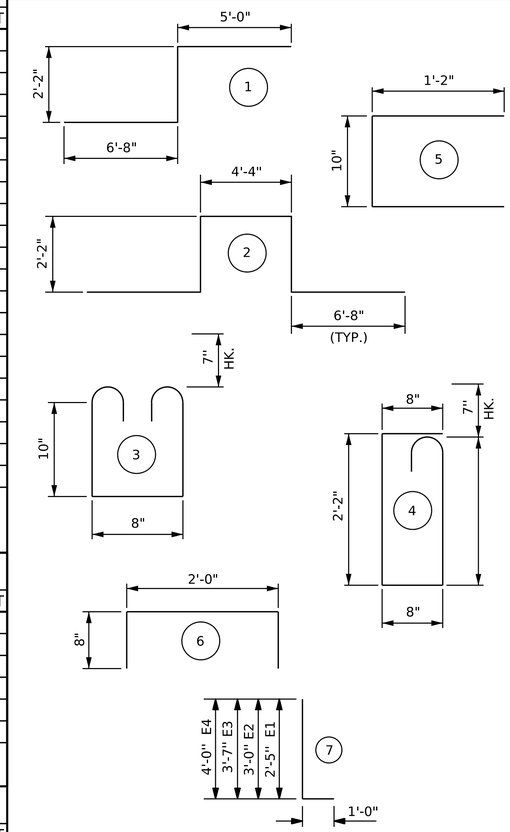

ALL BAR DIMENSIONS ARE OUT TO OUT

SUPERSTRUCTURE BILL OF MATERIAL

	CLASS AA CONCRETE	REINFORCING STEEL	EPOXY COATED REINFORCING STEEL
	(CU.YDS.)	(LBS.)	(LBS.)
SPANS	A & B	33,704	36,650
POUR 1	202.2		
POUR 2	186.2		
SIDEWALK	64.0		3,650
MEDIAN	41.0		2,362
END POST	2.0		460
TOTALS	495.4	33,704	43,122

PROJECT NO. U-5899
FORSYTH COUNTY
STATION: 32+73.75 -L-

PREPARED BY
MOTT MACDONALD
7621 Parfey Rd., Suite 115
Fuquay-Varina, NC 27526
(919) 552-2353
License No. F-0669
www.mottmac.com

NORTH CAROLINA PROFESSIONAL SEAL 039313 ENGINEER
JOHN M. ROBINSON
31-Mar-2024

STATE OF NORTH CAROLINA
DEPARTMENT OF TRANSPORTATION
RALEIGH

SUPERSTRUCTURE
BILL OF MATERIALS

REVISIONS						SHEET NO.
NO.	BY:	DATE:	NO.	BY:	DATE:	S01-24
1			3			TOTAL SHEETS
2			4			36

DRAWN BY : L. L. BLANKENSHIP DATE : 10-2023
CHECKED BY : J. M. ROBINSON DATE : 10-2023
DESIGN ENGINEER OF RECORD: R. L. DICKE DATE : 10-2023

DOCUMENT NOT CONSIDERED FINAL UNLESS ALL SIGNATURES COMPLETED

1/23/2025 6:03:44 PM
R:\Structures\BRG_01_330747\Plans\401_047_U-5899_SMU_BM_S01-24_330747.dgn
WILSTOTT