DocuSign Envelope ID: 4C1CB377-CC11-4091-A16D-0F6B11FBC965

# WATER TYPICAL DETAILS

| PROJECT REFERENCE NO. | SHEET NO. |
|---|---|
| U-5809 | UC-3A |

DESIGNED BY: BCH
DRAWN BY: KSA
CHECKED BY:
APPROVED BY:
REVISED:

NORTH CAROLINA DEPARTMENT OF TRANSPORTATION

UTILITIES ENGINEERING SEC.
PHONE:(919)707-6690
FAX:(919)250-4151

NORTH CAROLINA PROFESSIONAL SEAL ENGINEER BOBBY C HOUSER
2/9/2024

UTILITY CONSTRUCTION PLANS ONLY

**UTILITY CONSTRUCTION**

DOCUMENT NOT CONSIDERED FINAL UNLESS ALL SIGNATURES COMPLETED

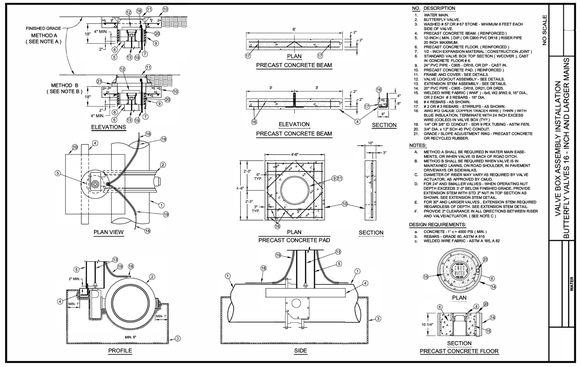


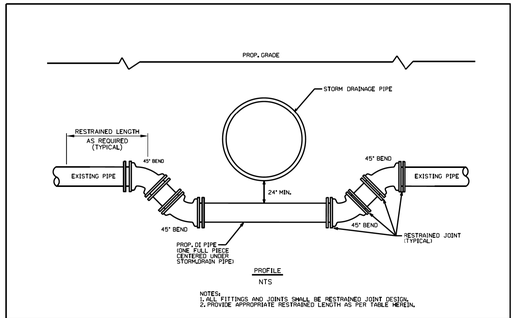


FORCE MAIN / WATER MAIN CROSSING UNDER STORM DRAINAGE PIPE

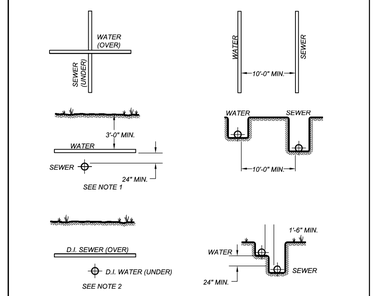


NOTES:
1. WHERE THE WATER MAIN IS INSTALLED ABOVE THE SEWER, BUT LESS THAN 24" CLEAR, BOTH THE WATER AND THE SEWER MAINS SHALL BE CONSTRUCTED OF DUCTILE IRON PIPE WITH WATER MAIN STANDARD JOINTS FOR A LATERAL DISTANCE OF AT LEAST 10 FEET ON EACH SIDE OF THE POINT OF CROSSING.
2. WHERE THE WATER PIPE IS LAID UNDER SEWER, BOTH THE WATER AND THE SEWER MAINS SHALL BE CONSTRUCTED OF DUCTILE IRON PIPE WITH WATER MAIN STANDARD JOINTS FOR A LATERAL DISTANCE OF AT LEAST 10 FEET ON EACH SIDE OF THE POINT OF CROSSING.
3. "SEWER" SHALL BE CONSIDERED TO MEAN EITHER SANITARY SEWER OR STORM SEWER.

TYPICAL PIPE CROSSING AND PARALLELS
NTS

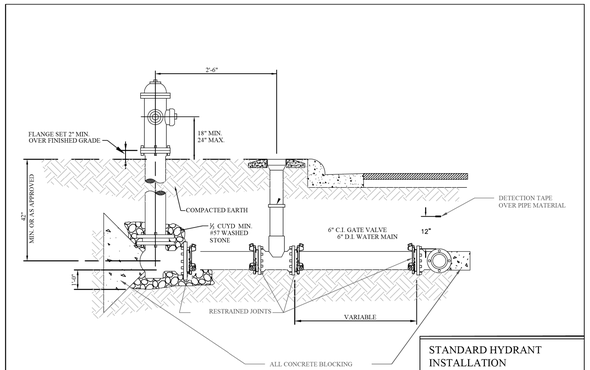


STANDARD HYDRANT INSTALLATION

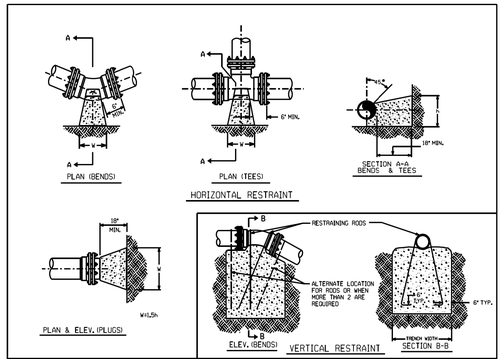


THRUST RESTRAINT FOR PIPE LINES

MAXIMUM TRENCH WIDTH AT TOP OF PIPE

| NOMINAL PIPE SIZE (INCHES) | TRENCH WIDTH (INCHES) |
|---|---|
| 4 | 28 |
| 6 | 30 |
| 8 | 32 |
| 10 | 34 |
| 12 | 36 |
| 14 | 38 |
| 16 | 40 |
| 18 | 42 |
| 20 | 44 |
| 24 | 48 |
| 30 | 54 |
| 36 | 60 |
| 42 | 66 |
| 48 | 72 |
| 54 | 78 |

**RESTRAINED JOINT DESIGN TABLE FOR DUCTILE IRON PIPE**

| FITTING | REQUIRED RESTRAINED LENGTH (FT) OF BARE D.I. PIPE BY DEPTH OF COVER | | | | | | | |
|---|---|---|---|---|---|---|---|---|
| **HORIZONTAL BENDS** | **3 FT** | **4 FT** | **5 FT** | **6 FT** | **7 FT** | **8 FT** | **9 FT** | **10 FT** |
| 6 INCH DIA - 11.25 DEG | 3 | 2 | 2 | 2 | 2 | 1 | 1 | 1 |
| 6 INCH DIA - 22.5 DEG | 5 | 4 | 4 | 3 | 3 | 3 | 3 | 2 |
| 6 INCH DIA - 45 DEG | 11 | 9 | 8 | 7 | 7 | 6 | 5 | 5 |
| 6 INCH DIA - 90 DEG | 26 | 22 | 19 | 17 | 16 | 14 | 13 | 12 |
| 8 INCH DIA - 11.25 DEG | 3 | 3 | 2 | 2 | 2 | 2 | 2 | 2 |
| 8 INCH DIA - 22.5 DEG | 7 | 6 | 5 | 5 | 4 | 4 | 3 | 3 |
| 8 INCH DIA - 45 DEG | 14 | 12 | 10 | 9 | 8 | 8 | 7 | 7 |
| 8 INCH DIA - 90 DEG | 33 | 29 | 25 | 23 | 20 | 19 | 17 | 16 |
| 12 INCH DIA - 11.25 DEG | 5 | 4 | 4 | 3 | 3 | 3 | 2 | 2 |
| 12 INCH DIA - 22.5 DEG | 9 | 8 | 7 | 6 | 6 | 5 | 5 | 5 |
| 12 INCH DIA - 45 DEG | 20 | 17 | 15 | 13 | 12 | 11 | 10 | 10 |
| 12 INCH DIA - 90 DEG | 47 | 41 | 36 | 33 | 29 | 27 | 25 | 23 |
| 16 INCH DIA - 11.25 DEG | 6 | 5 | 5 | 4 | 4 | 3 | 3 | 3 |
| 16 INCH DIA - 22.5 DEG | 12 | 11 | 9 | 8 | 8 | 7 | 6 | 6 |
| 16 INCH DIA - 45 DEG | 25 | 22 | 19 | 17 | 16 | 14 | 13 | 12 |
| 20 INCH DIA - 11.25 DEG | 7 | 6 | 6 | 5 | 5 | 4 | 4 | 4 |
| 20 INCH DIA -22.5 DEG | 15 | 13 | 11 | 10 | 9 | 9 | 8 | 7 |
| 20 INCH DIA - 45 DEG | 31 | 27 | 24 | 21 | 19 | 18 | 16 | 15 |
| 20 INCH DIA - 90 DEG | 74 | 65 | 57 | 52 | 47 | 43 | 40 | 37 |
| **VERTICAL BENDS - DOWN** | **3 FT** | **4 FT** | **5 FT** | **6 FT** | **7 FT** | **8 FT** | **9 FT** | **10 FT** |
| 6 INCH DIA - 11.25 DEG | 7 | 6 | 6 | 5 | 4 | 4 | 4 | 3 |
| 6 INCH DIA - 22.5 DEG | 15 | 13 | 11 | 10 | 9 | 8 | 8 | 7 |
| 6 INCH DIA - 45 DEG | 31 | 27 | 23 | 21 | 19 | 17 | 16 | 15 |
| 8 INCH DIA - 11.25 DEG | 10 | 8 | 7 | 6 | 6 | 5 | 5 | 5 |
| 8 INCH DIA - 22.5 DEG | 19 | 17 | 15 | 13 | 12 | 11 | 10 | 9 |
| 8 INCH DIA - 45 DEG | 40 | 35 | 30 | 27 | 25 | 22 | 21 | 19 |
| 12 INCH DIA - 11.25 DEG | 14 | 12 | 10 | 9 | 8 | 8 | 7 | 7 |
| 12 INCH DIA - 22.5 DEG | 28 | 24 | 21 | 19 | 17 | 16 | 14 | 13 |
| 12 INCH DIA - 45 DEG | 57 | 50 | 44 | 39 | 35 | 32 | 30 | 28 |
| 16 INCH DIA - 11.25 DEG | 18 | 15 | 14 | 12 | 11 | 10 | 9 | 9 |
| 16 INCH DIA - 22.5 DEG | 36 | 31 | 27 | 25 | 22 | 20 | 19 | 17 |
| 16 INCH DIA - 45 DEG | 74 | 65 | 57 | 51 | 46 | 42 | 39 | 36 |
| 20 INCH DIA - 11.25 DEG | 22 | 19 | 17 | 15 | 14 | 12 | 11 | 11 |
| 20 INCH DIA -22.5 DEG | 44 | 38 | 34 | 30 | 27 | 25 | 23 | 21 |
| 20 INCH DIA - 45 DEG | 91 | 79 | 70 | 63 | 57 | 52 | 48 | 44 |
| **VERTICAL BENDS - UP** | **3 FT** | **4 FT** | **5 FT** | **6 FT** | **7 FT** | **8 FT** | **9 FT** | **10 FT** |
| 6 INCH DIA - 11.25 DEG | 3 | 2 | 2 | 2 | 2 | 1 | 1 | 1 |
| 6 INCH DIA - 22.5 DEG | 5 | 4 | 4 | 3 | 3 | 3 | 3 | 2 |
| 6 INCH DIA - 45 DEG | 11 | 9 | 8 | 7 | 7 | 6 | 5 | 5 |
| 8 INCH DIA - 11.25 DEG | 3 | 3 | 2 | 2 | 2 | 2 | 2 | 2 |
| 8 INCH DIA - 22.5 DEG | 7 | 6 | 5 | 5 | 4 | 4 | 3 | 3 |
| 8 INCH DIA - 45 DEG | 14 | 12 | 10 | 9 | 8 | 8 | 7 | 7 |
| 12 INCH DIA - 11.25 DEG | 5 | 4 | 4 | 3 | 3 | 3 | 2 | 2 |
| 12 INCH DIA - 22.5 DEG | 9 | 8 | 7 | 6 | 6 | 5 | 5 | 5 |
| 12 INCH DIA - 45 DEG | 20 | 17 | 15 | 13 | 12 | 11 | 10 | 10 |
| 16 INCH DIA - 11.25 DEG | 6 | 5 | 5 | 4 | 4 | 3 | 3 | 3 |
| 16 INCH DIA - 22.5 DEG | 12 | 11 | 9 | 8 | 8 | 7 | 6 | 6 |
| 16 INCH DIA - 45 DEG | 25 | 22 | 19 | 17 | 16 | 14 | 13 | 12 |
| 20 INCH DIA - 11.25 DEG | 7 | 6 | 6 | 5 | 5 | 4 | 4 | 4 |
| 20 INCH DIA -22.5 DEG | 15 | 13 | 11 | 10 | 9 | 9 | 8 | 7 |
| 20 INCH DIA - 45 DEG | 31 | 27 | 24 | 21 | 19 | 18 | 16 | 15 |
| **DEAD ENDS / VALVES** | **3 FT** | **4 FT** | **5 FT** | **6 FT** | **7 FT** | **8 FT** | **9 FT** | **10 FT** |
| 6 INCH DIA | 50 | 45 | 41 | 38 | 35 | 33 | 31 | 29 |
| 8 INCH DIA | 65 | 59 | 54 | 50 | 46 | 43 | 40 | 38 |
| 10 INCH DIA | 80 | 72 | 66 | 61 | 56 | 52 | 49 | 46 |
| 12 INCH DIA | 94 | 85 | 78 | 72 | 66 | 62 | 58 | 54 |
| 16 INCH DIA | 123 | 111 | 102 | 94 | 87 | 81 | 76 | 71 |
| 20 INCH DIA | 151 | 137 | 125 | 115 | 107 | 100 | 93 | 88 |
| **REDUCERS** | **3 FT** | **4 FT** | **5 FT** | **6 FT** | **7 FT** | **8 FT** | **9 FT** | **10 FT** |
| 12 INCH X 8 INCH | 50 | 45 | 41 | 38 | 35 | 33 | 31 | 29 |
| **TEES** | **3 FT** | **4 FT** | **5 FT** | **6 FT** | **7 FT** | **8 FT** | **9 FT** | **10 FT** |
| 8" RUN X 8" BRANCH : RL = 1 FT | 64 | 58 | 53 | 48 | 44 | 41 | 38 | 36 |
| 8" RUN X 8" BRANCH : RL = 5 FT | 59 | 52 | 47 | 42 | 39 | 35 | 32 | 30 |
| 12" RUN X 12" BRANCH : RL = 1 FT | 93 | 84 | 77 | 70 | 65 | 60 | 56 | 53 |
| 12" RUN X 12" BRANCH : RL = 5 FT | 88 | 79 | 71 | 65 | 59 | 54 | 50 | 47 |

**ASSUMPTIONS**
LAYING CONDITION = TYPE 4
SOIL DESIGNATION = COHESIVE-GRANULAR
DESIGN PRESSURE = 200 PSI (TEST PRESSURE)
SAFETY FACTOR = 1.5

**NOTES**
1. RESTRAINED LENGTH IS MEASURED AS FOLLOWS:
   A. HORIZONTAL/VERTICAL BENDS: ALONG EACH SIDE OF BEND.
   B. HORIZONTAL/VERTICAL BENDS - OFFSET: ALONG THE OUTER SIDE OF EACH BEND. ALL PIPE BETWEEN THE TWO BENDS SHALL BE RESTRAINED JOINT.
2. WHEN IT IS NOT POSSIBLE TO INSTALL THE RESTRAINED LENGTHS AS NOTED BY THIS TABLE, CONTRACTOR SHALL INSTALL THE APPROPRIATE CONCRETE THRUST RESTRAINTS AS PER THE DETAILS HEREIN.

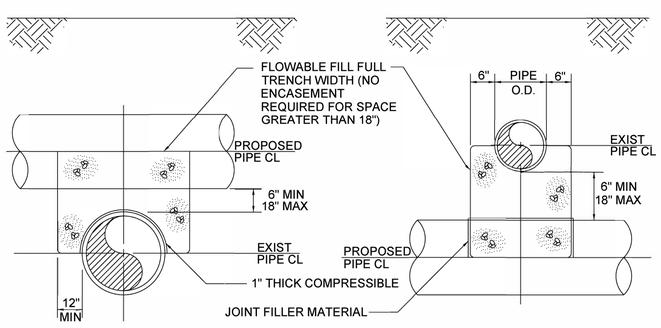


PROPOSED PIPELINE OVER EXIST PIPE

PROPOSED PIPELINE UNDER EXIST PIPE

CLASS B CONCRETE FOR ENCASING UTILITY LINES

STATE OF NORTH CAROLINA
DEPT. OF TRANSPORTATION
DIVISION OF HIGHWAYS
RALEIGH, N.C.
1-12

ENGLISH STANDARD DRAWING FOR
**WATER METER**

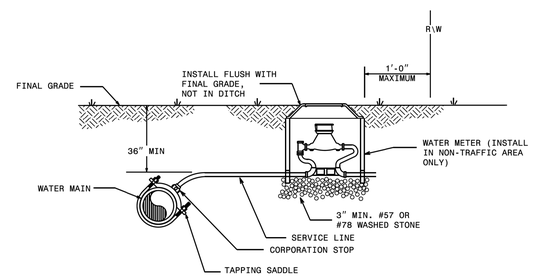


NOTES:

1. THIS DETAIL SHOWS THE TYPICAL FINAL WATER METER CONFIGURATION AFTER INSTALLATION OF A PROPOSED WATER METER, RECONNECTION OF AN EXISTING WATER METER, OR RELOCATION OF A WATER METER.

STATE OF NORTH CAROLINA
DEPT. OF TRANSPORTATION
DIVISION OF HIGHWAYS
RALEIGH, N.C.
1-12

ENGLISH STANDARD DRAWING FOR
**WATER METER**

SHEET 1 OF 1
1515.01

SHEET 1 OF 1
1515.01