DocuSign Envelope ID: 8C0A8956-F717-4CE8-B901-A49C21E55541

PROJECT REFERENCE NO.	SHEET NO.
P-5720	2C-2

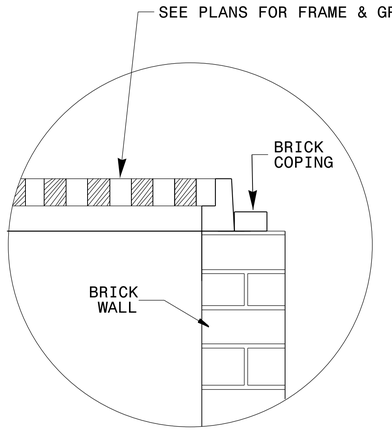

GRATE PLACEMENT DETAIL

FOR DROP INLETS

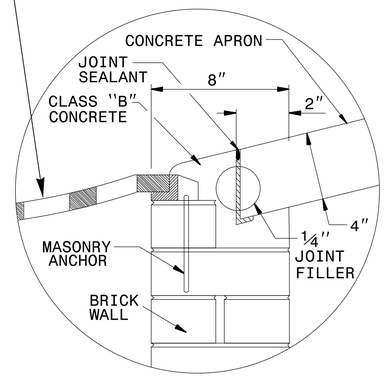

GRATE PLACEMENT DETAIL

FOR GRATED DROP INLETS

GENERAL NOTES:

- -CONSTRUCT IN ACCORDANCE WITH SECTION 859 OF THE STANDARD SPECIFICATIONS.
- -USE CLASS B CONCRETE.
- -THE DIMENSIONS FOR THE EXISTING BOXES ARE APPROXIMATE AND MAY VARY SLIGHTLY.
- -JUMBO CONCRETE BRICK WILL BE PERMITTED. 4″ CONCRETE BRICK OR 8″ SOLID CONCRETE BLOCK ARE REQUIRED FOR DRAINAGE STRUCTURE.
- -INCLUDE 18″ CONCRETE APRON IN UNIT PRICE BID PER EACH, CONVERT EXISTING CATCH BASIN TO DROP INLET.
- -SPECIAL DESIGN IS REQUIRED FOR USE UNDER PAVEMENT.
- -CONFIRM DIMENSIONS ON EACH INDIVIDUAL FRAME & GRATE PROPOSAL.
- -SEE STD. DRAWING 840.25 FOR MASONRY ANCHORAGE.

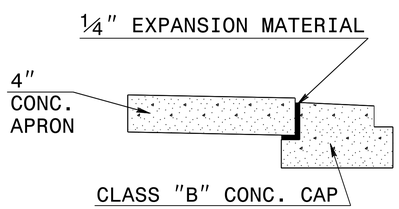

EXPANSION JOINT DETAIL

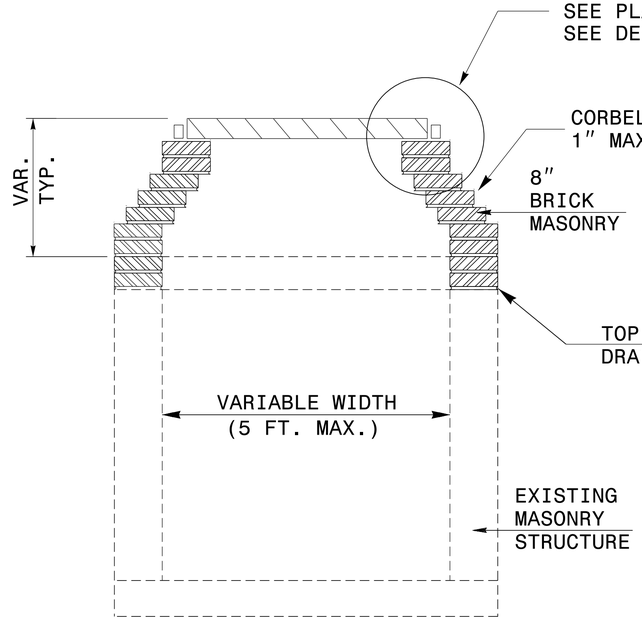

TYPICAL SECTION

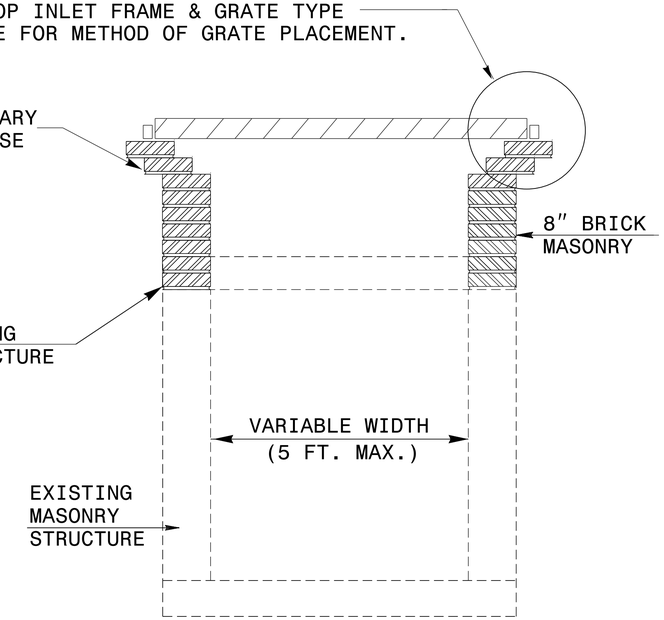

TYPICAL SECTION

1/26/2024

CONTRACT STANDARDS AND DEVELOPMENT UNIT
Office 919-707-6950 FAX 919-250-4119

DETAIL TO CONVERT EXISTING CATCH BASIN OR JUNCTION BOX TO DI OR 2-GI

ORIGINAL BY: T.S.S. DATE: NOV.1997
MODIFIED BY: T.S.S. DATE: FEB.2000
CHECKED BY: DATE:
FILE SPEC.: s:usr/details/stand/cbtodi02.dgn

$$$$SYSTIME$$$$
$$$$USERNAME$$$$