DocuSign Envelope ID: 8D9DD5CE-C82A-448C-BE92-69EF089A271B

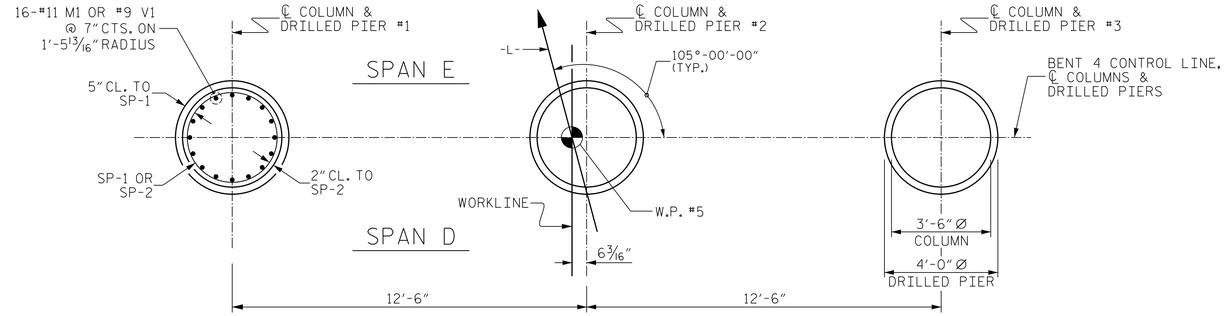

PLAN OF DRILLED PIERS & COLUMNS

REINFORCING STEEL, DIMENSIONS AND DETAILS ARE TYPICAL FOR EACH COLUMN AND DRILLED PIER

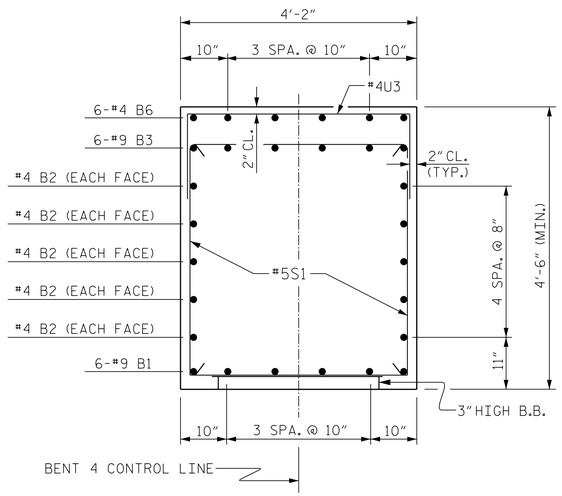

SECTION A-A

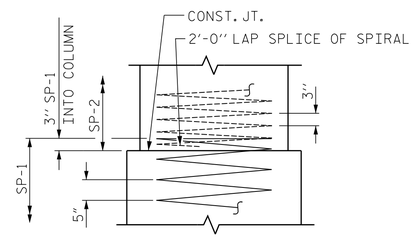

CONSTRUCTION JOINT DETAIL

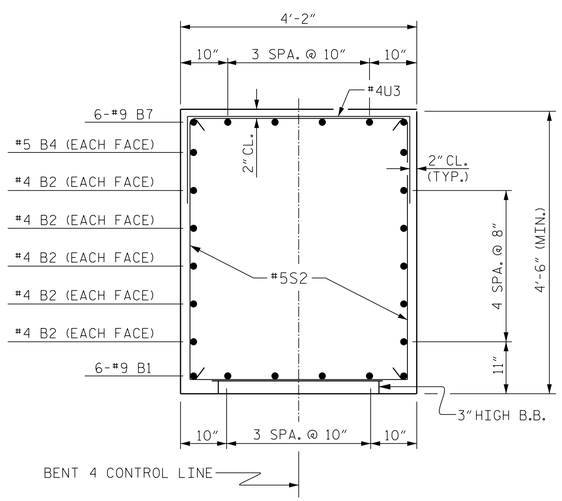

SECTION B-B

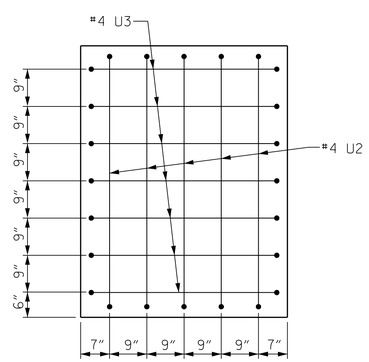

LEFT END OF CAP

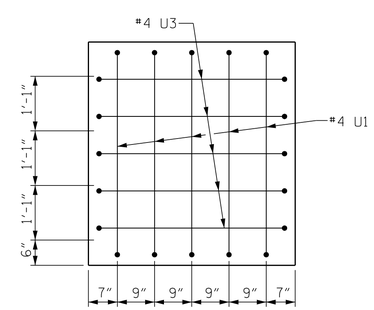

RIGHT END OF CAP

BAR TYPES

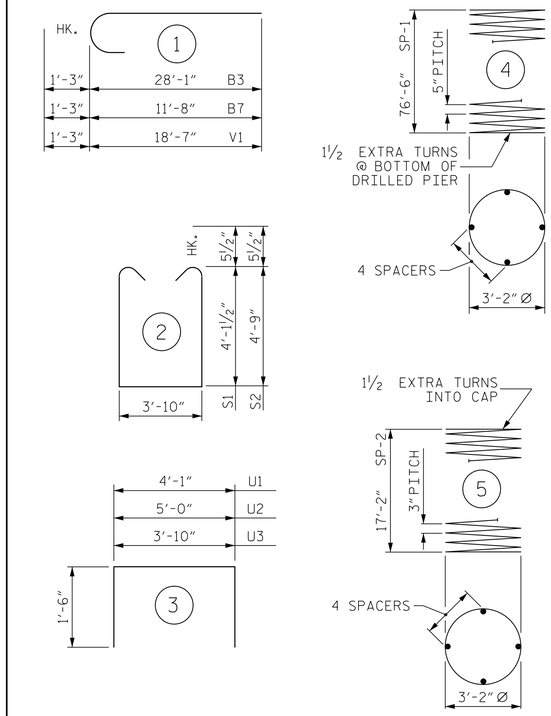

ALL BAR DIMENSIONS ARE OUT TO OUT

BILL OF MATERIAL

BENT NO. 4

BAR	NO.	SIZE	TYPE	LENGTH	WEIGHT
B1	6	#9	STR	34'-6"	704
B2	10	#4	STR	34'-6"	230
B3	6	#9	1	29'-4"	598
B4	2	#4	STR	8'-10"	12
B5	2	#4	STR	3'-10"	5
B6	6	#4	STR	10'-6"	42
B7	6	#9	1	12'-11"	263
M1	96	#11	STR	44'-4"	22,612
S1	27	#5	2	13'-0"	366
S2	19	#5	2	14'-3"	282
U1	5	#4	3	7'-1"	24
U2	5	#4	3	8'-0"	27
U3	47	#4	3	6'-10"	215
V1	48	#9	1	19'-10"	3237

REINFORCING STEEL 28,617 LBS.

SP-1	3	✱✱	4	1817'-11"	5688
SP-2	3	✱	5	692'-5"	1388

SPIRAL COLUMN REINFORCING STEEL 7,076 LBS.

✱✱ THE SP-1 SPIRAL REINFORCING STEEL SHALL BE W31 OR D-31 COLD DRAWN WIRE OR #5 PLAIN OR DEFORMED BAR

✱ THE SP-2 SPIRAL REINFORCING STEEL SHALL BE W20 OR D-20 COLD DRAWN WIRE OR #4 PLAIN OR DEFORMED BAR

CLASS A CONCRETE BREAKDOWN

POUR #2 (COLUMNS)	18.1 C.Y.
POUR #3 (CAP)	26.2 C.Y.
TOTAL CLASS A CONCRETE	44.3 C.Y.

DRILLED PIERS:

DRILLED PIER CONCRETE POUR #1 (DRILLED PIERS)	107.5 C.Y.

PROJECT NO. B-4926

LENOIR COUNTY

STATION: 25+45.00 -L-

SHEET 2 OF 2

STATE OF NORTH CAROLINA
DEPARTMENT OF TRANSPORTATION
RALEIGH

SUBSTRUCTURE

BENT NO. 4

SEAL 042890 ENGINEER PATRICK R. GALLAGHER 5/19/2023

Digitally signed by Patrick Gallagher

DOCUMENT NOT CONSIDERED FINAL UNLESS ALL SIGNATURES COMPLETED

Johnson, Mirmiran, & Thompson Inc.
4700 Falls of Neuse Rd, Suite 100,
Raleigh, NC, 27609
License No: C-3097

REVISIONS								SHEET NO.
NO.	BY:	DATE:	NO.	BY:	DATE:			S1-41
1			3					TOTAL SHEETS
2			4					49

DWN. BY: WDC	DATE: 03/2023	
CHKD. BY: PRG	DATE: 03/2023	
DES. EGR. OF RECORD: PRG	DATE: 03/2023	

wdcrutcher
DGN: V:\MCStructures\03747-01 - B-4926 Lenoir 20 & 34\Structures\Lenoir 20\Plans\401_083_B4926_SMU_BA02_041.dgn
TIME: 0:55 PM on Wednesday, September 06, 2023