DocuSign Envelope ID: DD5B537E-40B4-4723-895F-4939C460977A

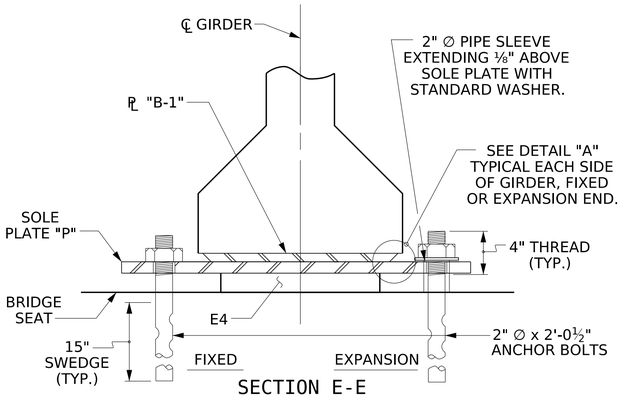

SECTION E-E

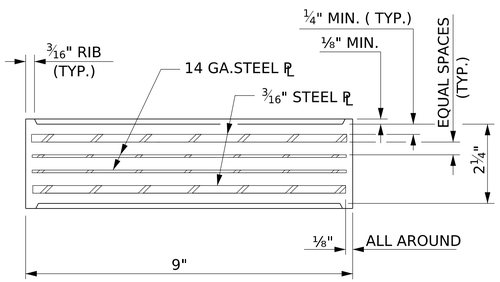

TYPICAL SECTION OF ELASTOMERIC BEARINGS

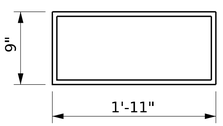

E4 (60 REQ'D)

PLAN VIEW OF ELASTOMERIC BEARING

TYPE V

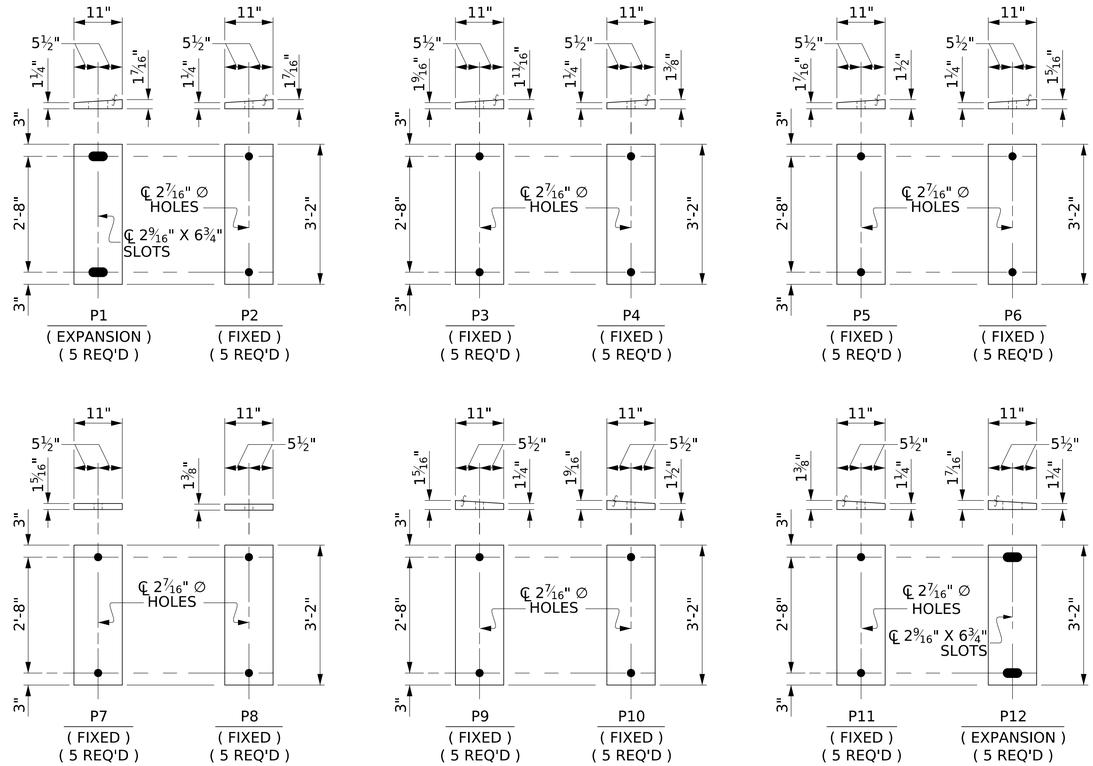

SOLE PLATE DETAILS ("P")

NOTES

AT ALL FIXED POINTS OF SUPPORT, NUTS FOR ANCHOR BOLTS ARE TO BE TIGHTENED FINGER TIGHT AND THEN BACKED OFF ½ TURN. THE THREAD OF THE NUT AND BOLT SHALL THEN BE BURRED WITH A SHARP POINTED TOOL.

THE 2" ∅ PIPE SLEEVE SHALL BE CUT FROM SCHEDULE 40 PVC PLASTIC PIPE. THE PVC PLASTIC PIPE SHALL MEET THE REQUIREMENTS OF ASTM D1785.

STEEL SOLE PLATES, ANCHOR BOLTS, NUTS, AND WASHERS SHALL BE GALVANIZED IN ACCORDANCE WITH THE STANDARD SPECIFICATIONS.

PRIOR TO WELDING, GRIND THE GALVANIZED SURFACE OF THE PORTION OF THE EMBEDDED PLATE AND SOLE PLATE THAT ARE TO BE WELDED. AFTER WELDING, DAMAGED GALVANIZED SURFACES SHALL BE REPAIRED IN ACCORDANCE WITH THE STANDARD SPECIFICATIONS.

WHEN WELDING THE SOLE PLATE TO THE EMBEDDED PLATE IN THE GIRDER, USE TEMPERATURE INDICATING WAX PENS, OR OTHER SUITABLE MEANS, TO ENSURE THAT THE TEMPERATURE OF THE SOLE PLATE DOES NOT EXCEED 300°F. TEMPERATURES ABOVE THIS MAY DAMAGE THE ELASTOMER.

SOLE PLATE "P", BOLTS, NUTS, WASHERS, AND PIPE SLEEVE SHALL BE INCLUDED IN THE PAY ITEM FOR PRESTRESSED CONCRETE GIRDERS.

ANCHOR BOLTS SHALL MEET THE REQUIREMENTS OF ASTM A449. NUTS SHALL MEET THE REQUIREMENTS OF AASHTO M291-DH OR AASHTO M292-2H. WASHERS SHALL MEET THE REQUIREMENTS OF AASHTO M293. SHOP DRAWINGS ARE NOT REQUIRED FOR ANCHOR BOLT, NUTS AND WASHERS. SHOP INSPECTION IS REQUIRED.

ALL SURFACES OF BEARING PLATES SHALL BE SMOOTH AND STRAIGHT.

THE ELASTOMER IN THE STEEL REINFORCED BEARINGS SHALL HAVE A SHEAR MODULUS OF 0.160 KSI, IN ACCORDANCE WITH AASHTO M251.

ALL SOLE PLATES SHALL BE AASHTO M270 GRADE 36.

MAXIMUM ALLOWABLE SERVICE LOADS	
D.L.+L.L. (NO IMPACT)	
TYPE V	365 k

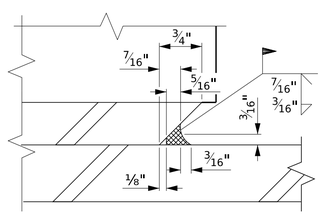

DETAIL "A"

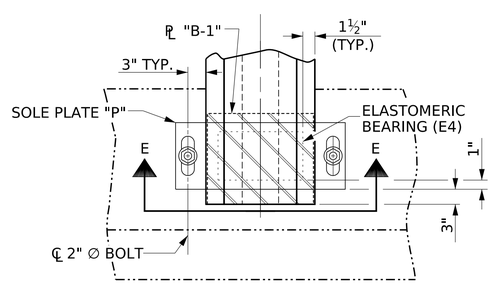

PLAN VIEW AT END BENT

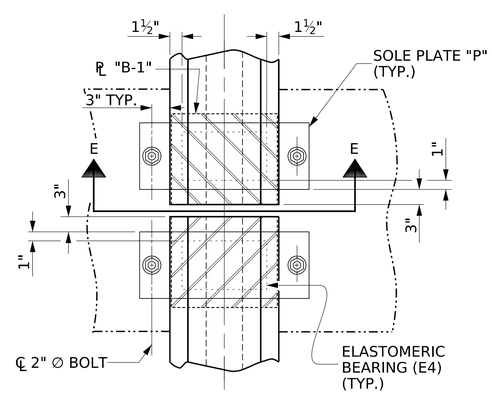

PLAN VIEW AT BENTS

PROJECT NO. B-4926

LENOIR COUNTY

STATION: 25+45.00 -L-

STATE OF NORTH CAROLINA
DEPARTMENT OF TRANSPORTATION
RALEIGH

STANDARD

ELASTOMERIC BEARING DETAILS

PRESTRESSED CONCRETE GIRDER SUPERSTRUCTURE

SEAL 19298 ENGINEER PATRICK R. GALLAGHER 8/2/2024

DOCUSIGNED BY: Patrick Gallagher

DOCUMENT NOT CONSIDERED FINAL UNLESS ALL SIGNATURES COMPLETED

Johnson, Mirmiran, & Thompson Inc.
4700 Falls of Neuse Rd, Suite 100,
Raleigh, NC, 27609
License No: C-3097

REVISIONS								SHEET NO.
NO.	BY:	DATE:	NO.	BY:	DATE:			S1-22
1			3					TOTAL SHEETS
2			4					49

DWN. BY: WDC	DATE: 03/2023	DRAWN BY : WJH 8/89	REV. 12/17	MAA/THC	
CHKD. BY: PRG	DATE: 03/2023	CHECKED BY : CRK 8/89	REV. 10/21	BNB/AAI	
DES. EGR. OF RECORD: PRG	DATE: 03/2023		REV. 10/23	BNB/SNM	

wdcruter
DGN: V:\NCS\Structure\03\T47-01 - B-4926 Lenoir 20 & 3A\Structures\Lenoir 20\Plans\40_043_B4926_SMU_BRG_L022.dgn
TIME: 07:22 AM on Wednesday, January 31, 2024

STD. NO. EB4 (SHT. 1)