DocuSign Envelope ID: 8D9DD5CE-C82A-448C-BE92-69EF089A271B

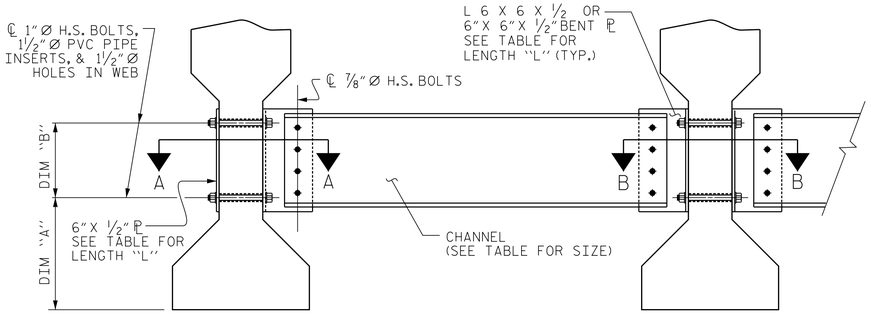

EXTERIOR GIRDER

INTERIOR GIRDER

PART SECTION AT INTERMEDIATE DIAPHRAGM

(TYPE III OR TYPE IV GIRDER SHOWN)

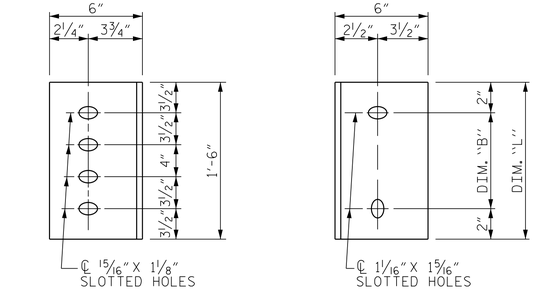

DIAPHRAGM FACE

(TYPE IV GDR.)

WEB FACE

CONNECTOR PLATE DETAILS

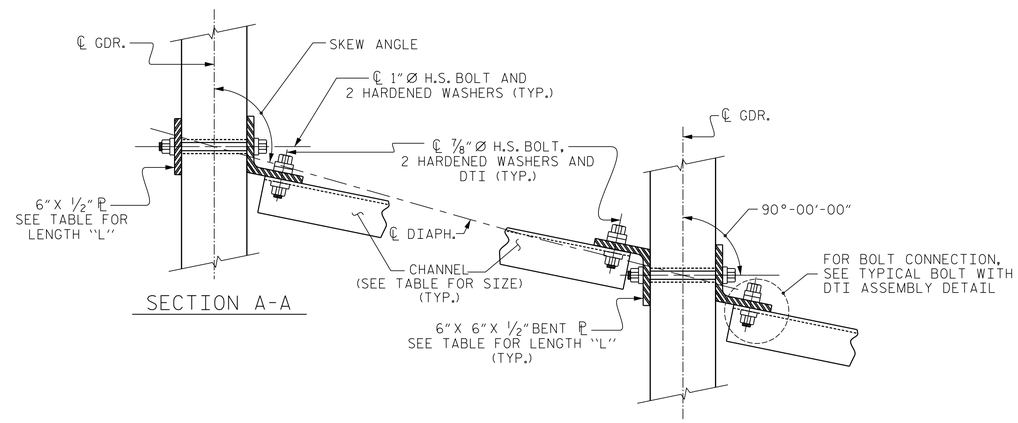

SECTION A-A

SECTION B-B

CONNECTION DETAILS

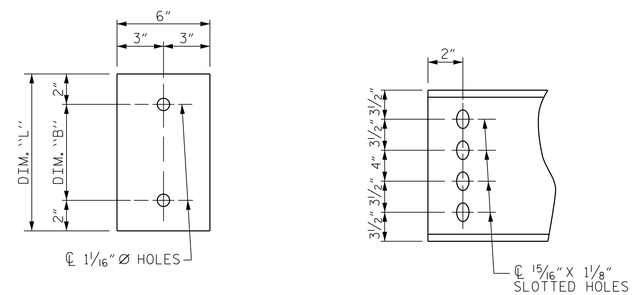

PLATE DETAILS

CHANNEL END

(TYPE IV GDR.)

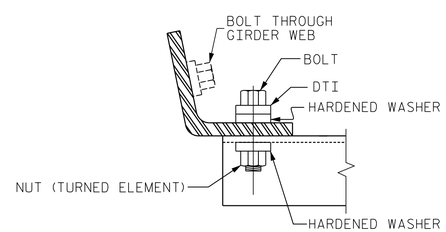

BOLT WITH DTI ASSEMBLY DETAIL

STRUCTURAL STEEL NOTES

ALL INTERMEDIATE DIAPHRAGM STEEL AND CONNECTOR PLATES SHALL BE AASHTO M270 GRADE 50 OR APPROVED EQUAL.

TENSION ON THE ASTM A325 BOLTS THROUGH THE CHANNEL MEMBER SHALL BE CALIBRATED USING DIRECT TENSION INDICATOR WASHERS IN ACCORDANCE WITH THE STANDARD SPECIFICATIONS.

TENSION ON THE ASTM A449 BOLTS THROUGH THE GIRDER WEB SHALL BE SNUG TIGHTENED FOLLOWED BY AN ADDITIONAL ¼ TURN.

THE PLATES, BENT PLATES, CHANNELS, AND ANGLES SHALL BE GALVANIZED OR METALLIZED IN ACCORDANCE WITH THE STANDARD SPECIFICATIONS. FOR THERMAL SPRAYED COATINGS (METALLIZATION), SEE SPECIAL PROVISIONS.

FOR METALLIZATION, APPLY A THERMAL SPRAYED COATING WITH A SEAL COAT TO ALL STEEL DIAPHRAGM SURFACES IN ACCORDANCE WITH THE DEPARTMENTS THERMAL SPRAYED COATINGS (METALLIZATION) PROGRAM, THERMAL SPRAYED COATINGS SPECIAL PROVISION AND SECTION 442 OF THE STANDARD SPECIFICATIONS.

GALVANIZE THE HIGH STRENGTH BOLTS, NUTS, WASHERS AND DIRECT TENSION INDICATORS IN ACCORDANCE WITH THE STANDARD SPECIFICATIONS.

USE AN ASTM F436 HARDENED WASHER WITH STANDARD AND SLOTTED HOLES UNDER EACH BOLT HEAD AND NUT.

FOR BOLTS THROUGH THE GIRDER WEB, PROVIDE SUFFICIENT LENGTH OF THREADS ON ALL BOLTS TO ACCOMMODATE WASHERS AND THE THICKNESS OF CONNECTING MEMBER PLUS AT LEAST ¼" PROJECTION BEYOND THE NUT.

INTERMEDIATE DIAPHRAGM ASSEMBLY SHALL COMPLY WITH SECTION 1072 OF THE STANDARD SPECIFICATIONS.

SUBMIT TWO SETS OF WORKING DRAWINGS FOR THE INTERMEDIATE DIAPHRAGM ASSEMBLY FOR REVIEW, COMMENTS AND ACCEPTANCE. AFTER REVIEW, COMMENTS, AND ACCEPTANCE, SUBMIT SEVEN SETS FOR DISTRIBUTION.

IN THE EXTERIOR BAYS, PLACE TEMPORARY STRUTS BETWEEN PRESTRESSED GIRDERS ADJACENT TO THE STEEL DIAPHRAGMS. STRUTS SHALL REMAIN IN PLACE 3 DAYS AFTER CONCRETE IS PLACED.

THE COST OF THE STEEL DIAPHRAGMS AND ASSEMBLIES SHALL BE INCLUDED IN THE UNIT PRICE BID FOR PRESTRESSED CONCRETE GIRDERS.

TABLE

GIRDER TYPE	CHANNEL SIZE	DIM "A"	DIM "B"	DIM "L"
IV	MC 18 x 42.7	1'-9½"	1'-2"	1'-6"

PROJECT NO. B-4926

LENOIR COUNTY

STATION: 25+45.00 -L-

STATE OF NORTH CAROLINA
DEPARTMENT OF TRANSPORTATION
RALEIGH

STANDARD

INTERMEDIATE STEEL DIAPHRAGMS FOR TYPE II, III, & IV PRESTRESSED CONCRETE GIRDERS

NORTH CAROLINA PROFESSIONAL SEAL ENGINEER PATRICK R. GALLAGHER 9/12/23

DOCUMENT NOT CONSIDERED FINAL UNLESS ALL SIGNATURES COMPLETED

Johnson, Mirmiran, & Thompson Inc.
4700 Falls of Neuse Rd, Suite 100,
Raleigh, NC, 27609
License No: C-3097

REVISIONS						SHEET NO.
NO.	BY:	DATE:	NO.	BY:	DATE:	S1-21
1			3			TOTAL SHEETS
2			4			49

STD. NO. PCG10

DWN. BY: WDC	DATE: 03/2023	DRAWN BY : TLA 6/05	REV. 5/1/06RRR	KMM/GM
CHKD. BY: PRG	DATE: 03/2023	CHECKED BY : VC 6/05	REV. 10/1/11	MAA/GM
DES. EGR. OF RECORD: PRG	DATE: 03/2023		REV. 12/17	MAA/THC

wdcruter
DGN: V:\NC\Structures\03\T47-01_B-4926 Lenoir 20 &3\Structures\Lenoir 20\Plans\K01_D41_B4926_SM1_S401_02.dgn
TIME: 01:33 PM on Wednesday, September 06, 2023