PROJECT REFERENCE NO.	SHEET NO.
B-4926	EC-4/ CONST.4

TRANSYSTEMS
1 Glenwood Avenue
Raleigh, NC 27603
Tel:919.789.9977
Fax:919.789.9591
License: F-0453

6/2/99

PS – PAVED SHOULDER
SBG – SHOULDER BERM GUTTER

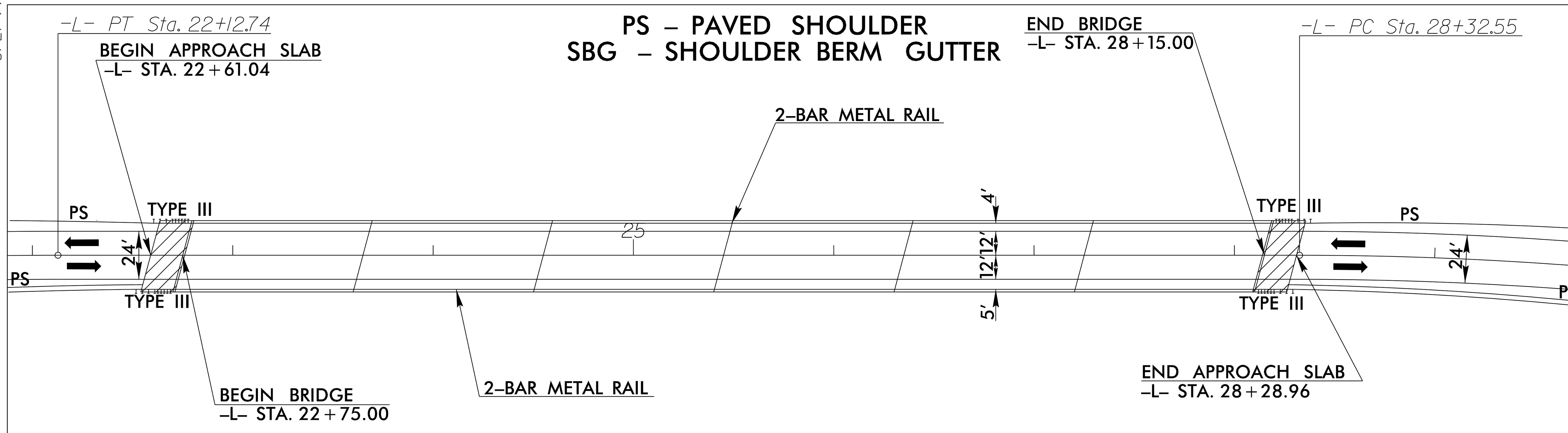

NOT TO SCALE

Sketch showing Dimensions of Pavement and Shoulder in Relation to Proposed Bridge Width

-L-	
PI Sta 18+59.98	PI Sta 30+02.07
△ = 17° 33′ 45.4″ (RT)	△ = 10° 38′ 32.4″ (RT)
D = 2° 28′ 10.7″	D = 3° 08′ 53.2″
L = 711.14′	L = 338.05′
T = 358.38′	T = 169.51′
R = 2,320.00′	R = 1,820.00′
SE = .06	SE = .07
RO = 162′	RO = 189′
-DRV-	
PI Sta 10+95.74	PI Sta 12+07.18
△ = 19° 45′ 49.7″ (LT)	△ = 69° 46′ 54.4″ (LT)
D = 22° 55′ 05.9″	D = 190° 59′ 09.4″
L = 86.24′	L = 36.54′
T = 43.55′	T = 20.92′
R = 250.00′	R = 30.00′
SE = SEE PLANS	SE = SEE PLANS

NOTE: PAVE -DRV- FROM STA. 12+15.00 TO STA. 12+29.88
ALL RIP RAP TO BE GRANITE MATERIAL.

CLEARING AND GRUBBING
EROSION CONTROL FOR
CONSTRUCTION SHEET 4

NOTE:
PLACE TEMPORARY ROCK SEDIMENT DAMS TYPE – B AND TEMPORARY ROCK SILT CHECKS TYPE – A AT DRAINAGE OUTLETS.

UTILIZE SPECIAL STILLING BASINS AS APPLICABLE AT DRILLED PIER LOCATIONS

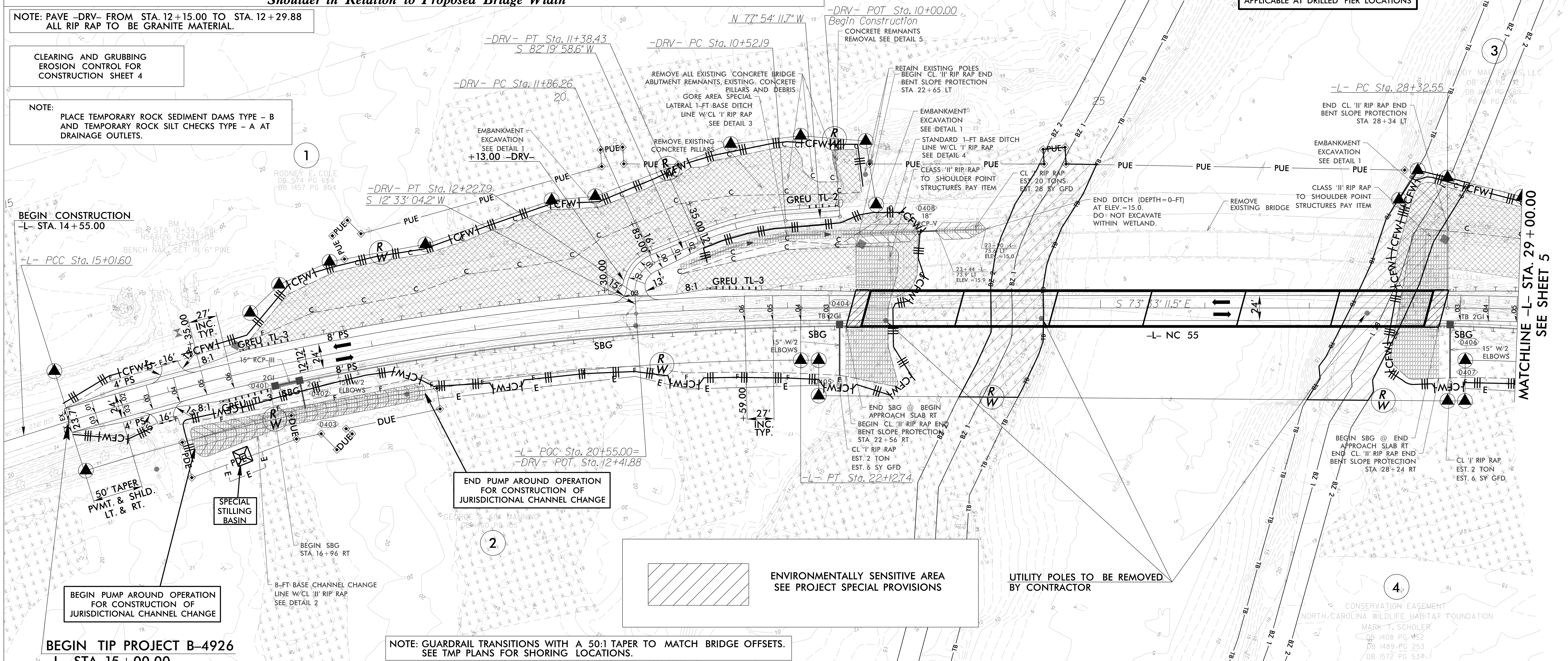

ENVIRONMENTALLY SENSITIVE AREA
SEE PROJECT SPECIAL PROVISIONS

BEGIN TIP PROJECT B–4926
–L– STA. 15+00.00

NOTE: GUARDRAIL TRANSITIONS WITH A 50:1 TAPER TO MATCH BRIDGE OFFSETS.
SEE TMP PLANS FOR SHORING LOCATIONS.

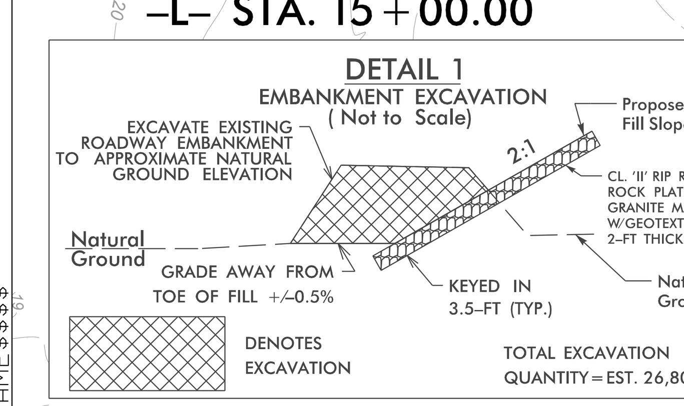

FROM STA. 17+00 TO STA. 23+25 –L– LT
FROM STA. 27+81 TO STA. 34+27 –L– LT
FROM STA. 35+92 TO STA. 40+00 –L– LT
FROM STA. 10+00 TO STA. 12+18 –DRV– LT
FROM STA. 10+00 TO STA. 12+18 –DRV– RT

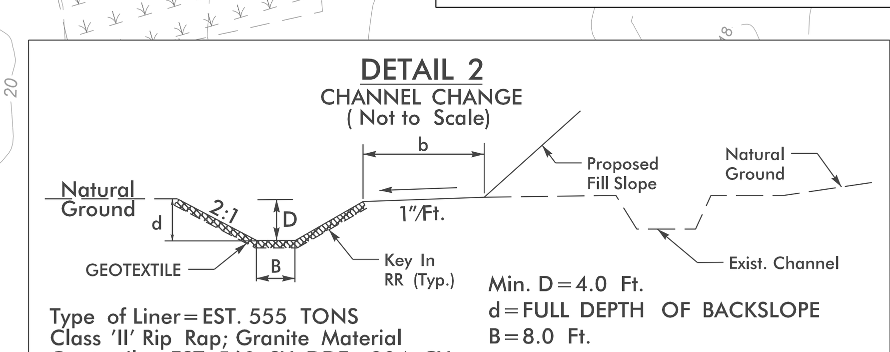

FROM STA. 16+10 TO STA. 18+43 –L– RT

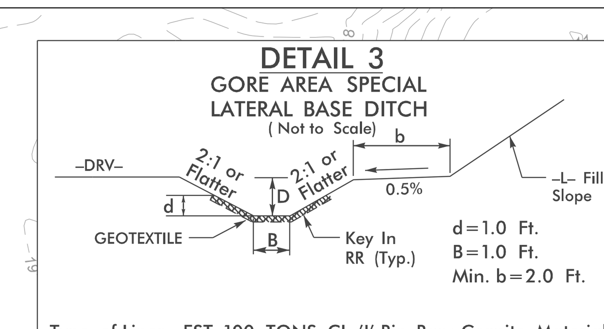

FROM STA. 21+00 TO STA. 22+50 –L– LT

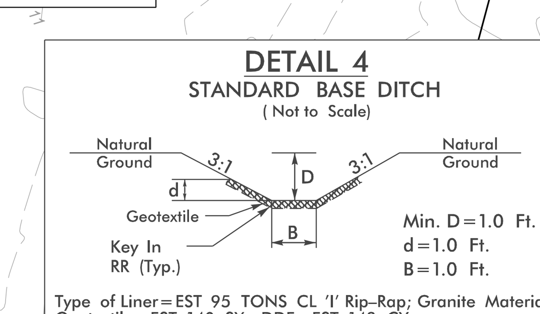

FROM STA. 22+50 TO STA. 23+90 –L– LT

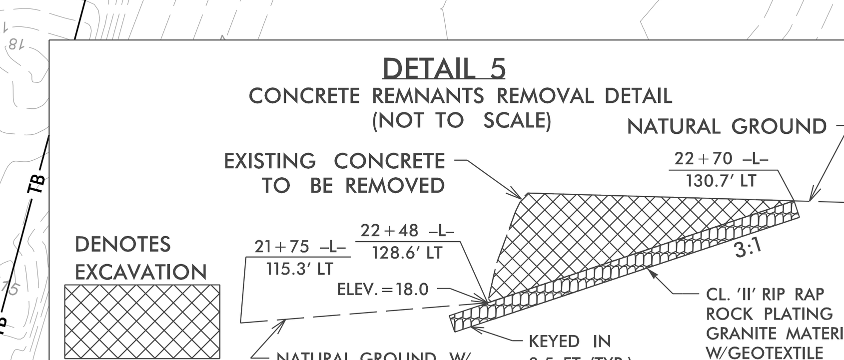

FROM STA. 21+75 TO STA. 22+70 –L– LT

PROVIDE CLASS 'II' RIP RAP ROCK PLATING (GRANITE) ON ALL SLOPES STEEPER THAN 3:1 OR AS INDICATED ON THE PLANS. 2-FT THICK TO SHOULDER POINT. REFER TO STANDARD ROCK PLATING DETAIL (STD 275.01)

SEE SHEET 6 FOR –L– PROFILE
SEE SHEET 7 FOR –DRV– PROFILE

$$$$$$SYSTIME$$$$$
$$$$$$$$$$$$$$$$$$DGN$$$$$$$$$$$$$$$$$
$$$$$$USERNAME$$$$$