DocuSign Envelope ID: D80169BF-A708-42D0-9ECB-52BCCABB4177

TIP NO.	SHEET NO.
HB-0002	PMP-03

APPROVED: DocuSigned by: Greg S. Purvis D1F0F7C256E3403...

DATE: 2/13/2024

SEAL

NORTH CAROLINA PROFESSIONAL SEAL 22999 ENGINEER GREG S. PURVIS

DOCUMENT NOT CONSIDERED FINAL UNLESS ALL SIGNATURES COMPLETED

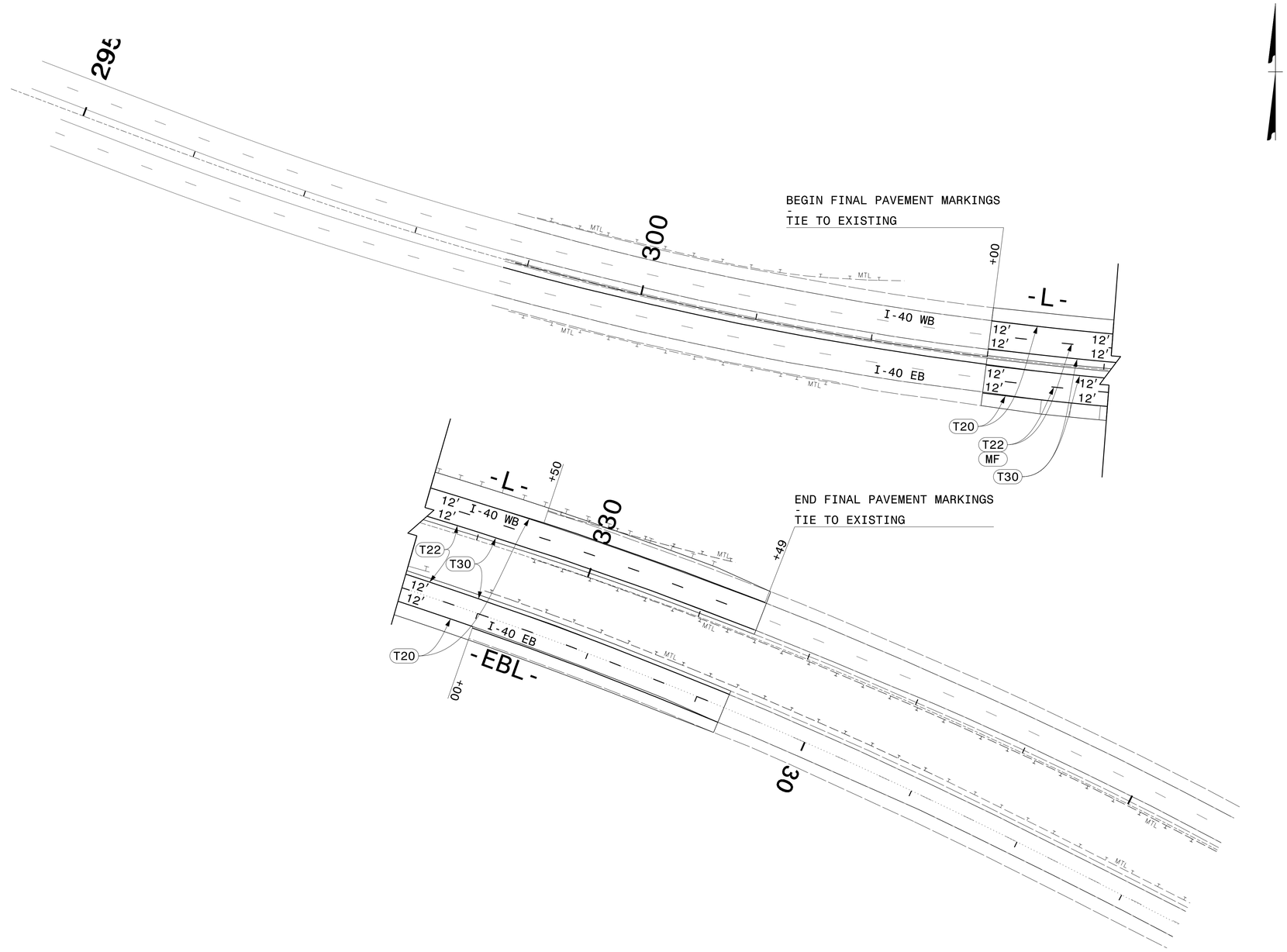

WETHERILL ENGINEERING
1223 Jones Franklin Rd.
Raleigh, N.C. 27606
License No. F-0377
Bus: 919 851 8077
Fax: 919 851 8107
TRANSPORTATION PLANNING/DESIGN - BRIDGE/STRUCTURE DESIGN
CIVIL/SITE DESIGN - GIS/GPS - CONSTRUCTION OBSERVATION

PAVEMENT MARKING DETAIL

2/13/2024
\\Wei-fs01\projects\2021\2147.07_HB-0002\Traffic\Traffic Design\Pre-Let\Plan\Pavement Markings\HB-0002_PMP_03.dgn
User:AHayes