BILL OF MATERIAL - HEADWALL & FOOTING - STAGE II

BAR	NO.	SIZE	TYPE	LENGTH	WEIGHT
B1	6	#6	STR.	17'-2"	155
B2	8	#4	STR.	9'-11"	53
B3	8	#4	STR.	3'-2"	17
B4	2	#4	STR.	17'-2"	23
B5	8	#5	1	7'-6"	63
B6	8	#5	1	6'-7"	55
D1	10	#6	STR.	3'-0"	45
N1	13	#5	2	8'-7"	116
T1	72	#4	STR.	3'-1"	148
T2	4	#4	STR.	3'-3"	9
T3	8	#4	STR.	18'-11"	101
T4	6	#4	STR.	19'-8"	79
V1	13	#4	STR.	6'-4"	55
U1	5	#5	3	4'-3"	22
REINFORCING STEEL					941 LBS.
CLASS A CONCRETE					3.9 C.Y.

BAR TYPE

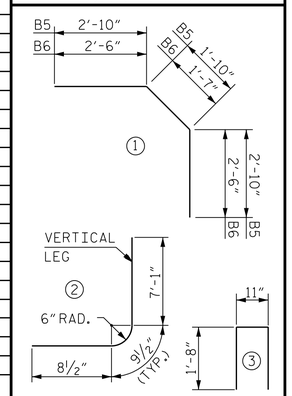

DIMENSIONS ARE OUT TO OUT

SPLICE LENGTHS

BAR	SIZE	SPLICE LENGTHS
B4	#5	2'-4"
B5	#5	2'-4"
C2	#4	2'-5"

BILL OF MATERIAL - CULVERT - STAGE II

BAR	NO.	SIZE	TYPE	LENGTH	WEIGHT
A1	116	#5	1	7'-2"	868
A2	28	#5	1	7'-4"	214
A100	35	#5	STR.	6'-0"	219
A110	1	#5	STR.	4'-7"	5
A111	1	#5	STR.	2'-7"	3
A112	1	#5	STR.	2'-6"	3
A200	35	#5	STR.	6'-0"	219
A210	1	#5	STR.	4'-7"	5
A211	1	#5	STR.	2'-7"	3
A212	1	#5	STR.	2'-6"	3
B1	73	#4	STR.	6'-8"	333
C2	28	#4	STR.	28'-8"	536
D1	18	#6	STR.	2'-6"	68
G2	4	#4	STR.	6'-6"	17
L1	9	#4	2	7'-9"	47
S3	6	#8	STR.	6'-6"	104
S4	6	#8	STR.	6'-0"	96
REINFORCING STEEL					2,743 LBS.
CLASS A CONCRETE					21.0 C.Y.

BAR TYPE

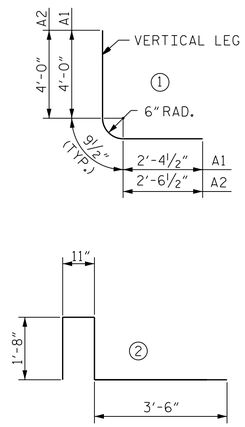

DIMENSIONS ARE OUT TO OUT

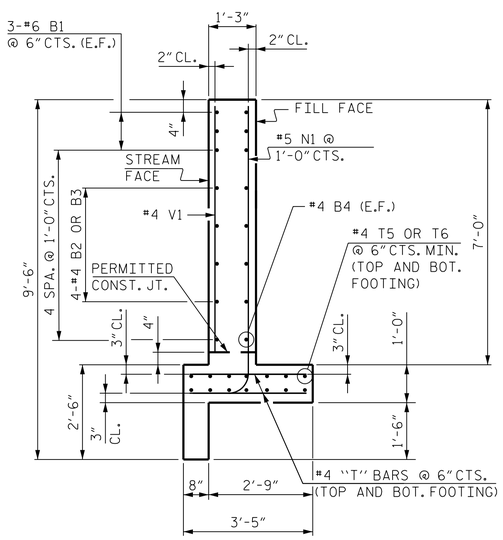

SECTION H-H

HEADWALL

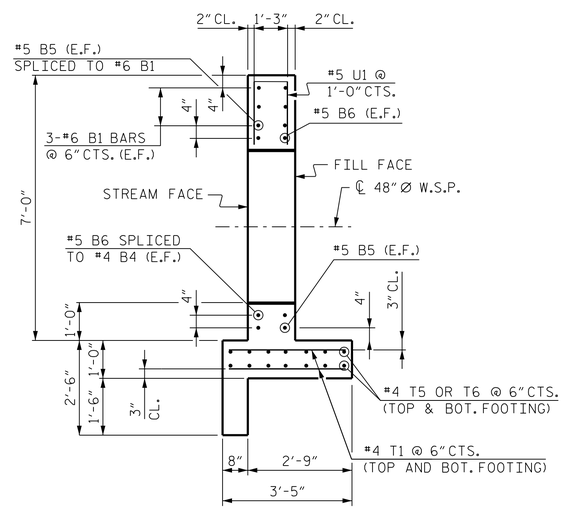

SECTION I-I

AT 48" Ø W.S.P.

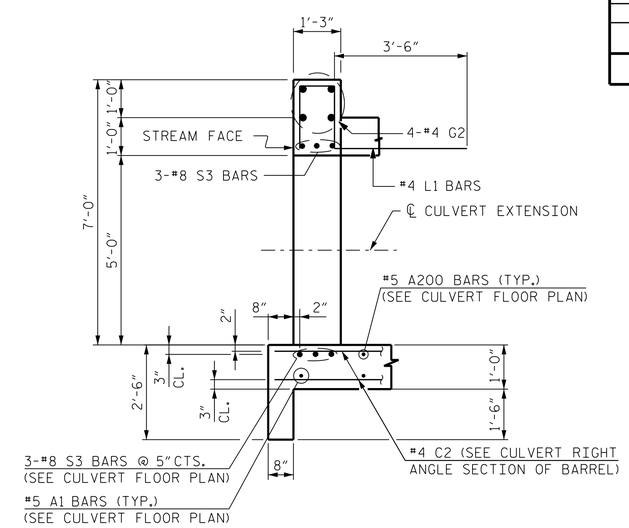

SECTION J-J

AT CULVERT EXTENSION

PROJECT NO. R-2577A
FORSYTH COUNTY
STATION: 229+09.00 -L2-

SHEET 14 OF 14

STATE OF NORTH CAROLINA
DEPARTMENT OF TRANSPORTATION
RALEIGH

BILL OF MATERIAL
STAGE II

CULVERT NO. 2

NORTH CAROLINA PROFESSIONAL SEAL 48850 ENGINEER ONDINE J. PAITEL
ipositsign
Ondine Paitel
11/10/2023

RK&K
P: (919) 878-9560
8601 Six Forks Road, Forum 1 Suite 700
Raleigh, North Carolina 27615 | NC License No. F-0112
Engineers | Construction Managers | Planners | Scientists
www.rkk.com
Responsive People | Creative Solutions

DOCUMENT NOT CONSIDERED FINAL
UNLESS ALL SIGNATURES COMPLETED

REVISIONS						SHEET NO.
NO.	BY:	DATE:	NO.	BY:	DATE:	CU_2-14
1			3			TOTAL SHEETS
2			4			14

DRAWN BY : T. K. BOYD DATE : NOV 2023
CHECKED BY : B. D. KLAPPENBACH DATE : NOV 2023
DESIGN ENGINEER OF RECORD : O. J. PAITEL DATE : NOV 2023

opaitel
11/10/2023 R:\Structures\Culvert\Martin Mill Creek Culvert\DGN\Final\R-2577A_SMU_CU_2-14_330000.dgn