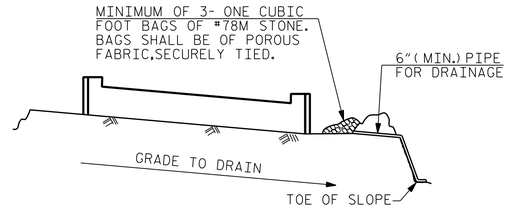

BAGGED STONE AND PIPE SHALL BE PLACED IMMEDIATELY AFTER COMPLETION OF END BENT EXCAVATION. PIPE MAY BE EITHER CONCRETE, CORRUGATED STEEL, CORRUGATED ALUMINUM ALLOY, OR CORRUGATED PLASTIC. PERFORATED PIPE WILL NOT BE ALLOWED.

BAGGED STONE SHALL REMAIN IN PLACE UNTIL THE ENGINEER DIRECTS THAT IT BE REMOVED. THE CONTRACTOR SHALL REMOVE AND DISPOSE OF SILT ACCUMULATIONS AT BAGGED STONE WHEN SO DIRECTED BY THE ENGINEER. BAGS SHALL BE REMOVED AND REPLACED WHENEVER THE ENGINEER DETERMINES THAT THEY HAVE DETERIORATED AND LOST THEIR EFFECTIVENESS.

NO SEPARATE PAYMENT WILL BE MADE FOR THIS WORK AND THE ENTIRE COST OF THIS WORK SHALL BE INCLUDED IN THE UNIT CONTRACT PRICE BID FOR THE SEVERAL PAY ITEMS.

TEMPORARY DRAINAGE AT END BENT

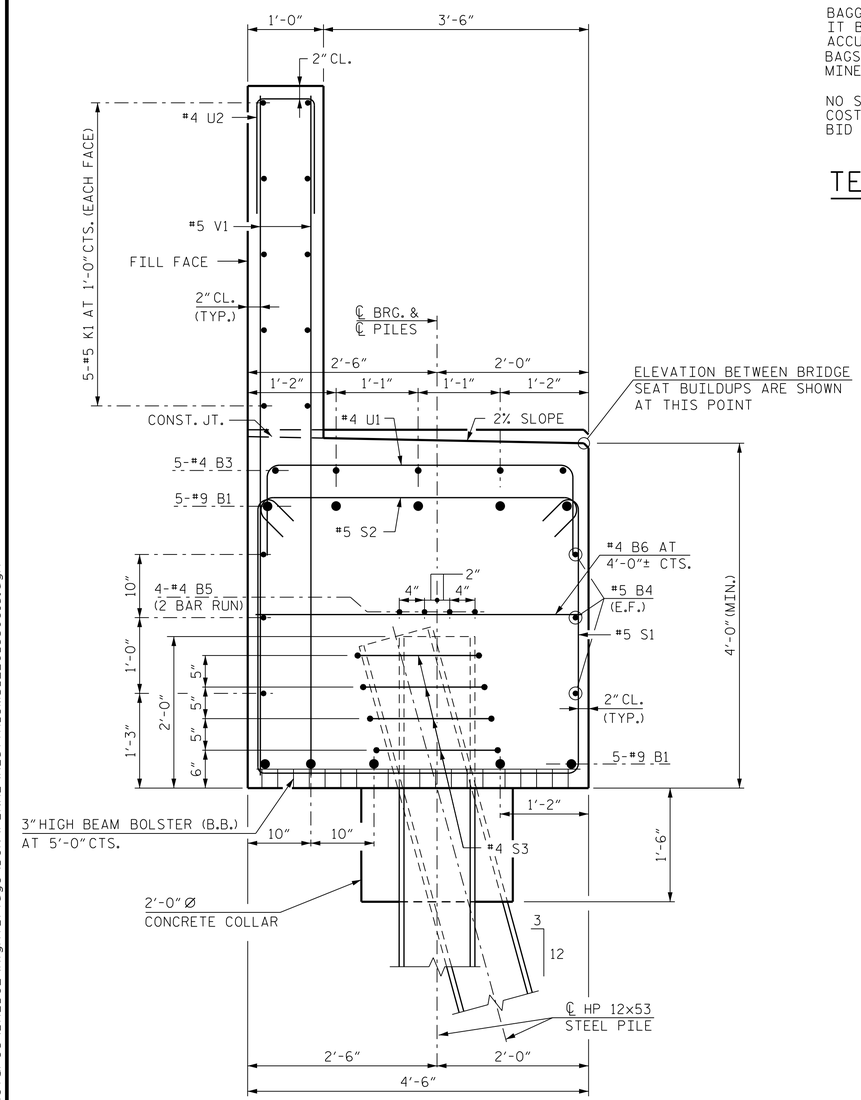

SECTION A-A

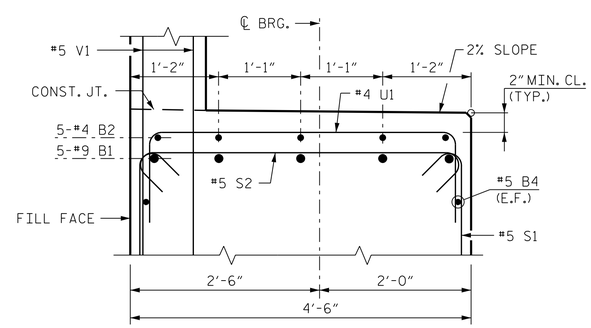

SECTION B-B

BAR TYPES

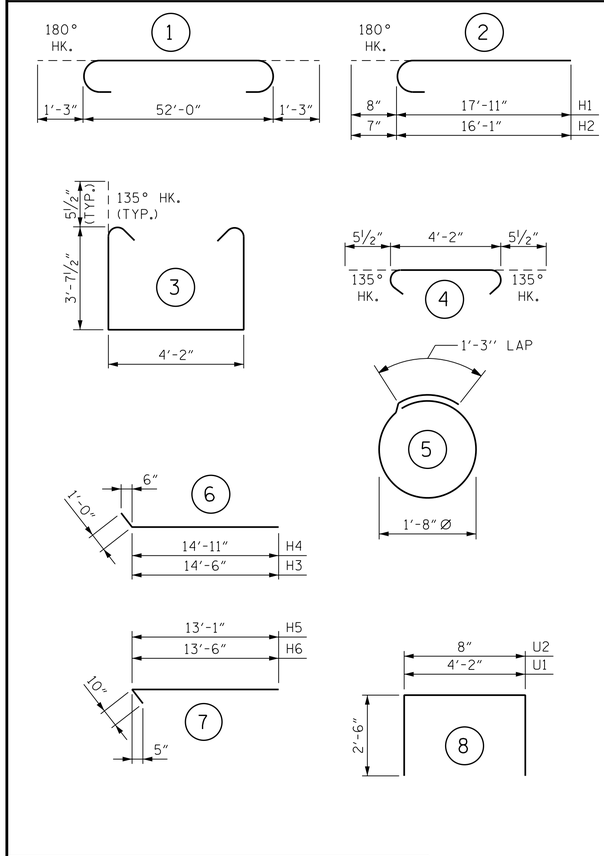

NOTE: ALL BAR DIMENSIONS ARE OUT TO OUT.

BILL OF MATERIAL

END BENT 2

BAR	NO.	SIZE	TYPE	LENGTH	WEIGHT
B1	10	#9	1	54'-6"	1,853
B2	5	#4	STR.	18'-10"	63
B3	5	#4	STR.	7'-7"	25
B4	6	#5	STR.	52'-0"	325
B5	8	#4	STR.	27'-4"	146
B6	13	#4	STR.	4'-2"	36
H1	18	#6	2	18'-7"	502
H2	16	#5	2	16'-8"	278
H3	12	#6	6	15'-6"	279
H4	12	#6	6	15'-11"	287
H5	12	#5	7	13'-11"	174
H6	12	#5	7	14'-4"	179
K1	10	#5	STR.	52'-2"	544
K2	8	#5	STR.	3'-1"	26
S1	62	#5	3	12'-4"	798
S2	62	#5	4	5'-1"	329
S3	24	#4	5	6'-6"	104
U1	19	#4	8	9'-2"	116
U2	46	#4	8	5'-8"	174
V1	92	#5	STR.	8'-5"	808
V2	38	#5	STR.	10'-1"	400
V3	36	#5	STR.	9'-6"	357
REINFORCING STEEL					7,803 LBS.

CLASS "A" CONCRETE	
POUR 1 (CAP, COLLARS & LOWER WINGS)	42.8 C.Y.
POUR 2 (BACKWALL & UPPER WINGS)	17.6 C.Y.
TOTAL	60.4 C.Y.

PROJECT NO. R-2577A
FORSYTH COUNTY
STATION: 140+39.50 -L-

SHEET 3 OF 3

STATE OF NORTH CAROLINA
DEPARTMENT OF TRANSPORTATION
RALEIGH

SUBSTRUCTURE
END BENT 2
MISELLANEOUS DETAILS AND BILL OF MATERIAL
RIGHT LANE

BRIDGE NO. 330814

NORTH CAROLINA PROFESSIONAL SEAL 48850 ENGINEER ONDINE J. PAITEL

DocuSigned by: Ondine Paitel
C1B5F3A3A3A3A3A...
11/10/2023

RK&K
P: (919) 878-9560
8601 Six Forks Road, Forum 1 Suite 700
Raleigh, North Carolina 27615 | NC License No. F-0112
Engineers | Construction Managers | Planners | Scientists
www.rkk.com
Responsive People | Creative Solutions

DOCUMENT NOT CONSIDERED FINAL UNLESS ALL SIGNATURES COMPLETED

REVISIONS							SHEET NO.
NO.	BY:	DATE:	NO.	BY:	DATE:		SR-31
1			3				TOTAL SHEETS
2			4				34

DRAWN BY : B. A. HAAG DATE : SEP 2023
CHECKED BY : L. K. AUSTIN DATE : SEP 2023
DESIGN ENGINEER OF RECORD : O. J. PAITEL DATE : SEP 2023

tboyd
11/10/2023 R:\Structures\BRIDGE\RightBridge\DGN\FINAL\R2577A_SMU_E2C_330815.dgn