DocuSign Envelope ID: 763C152F-F6CB-4895-8952-7EE400CE2BA7

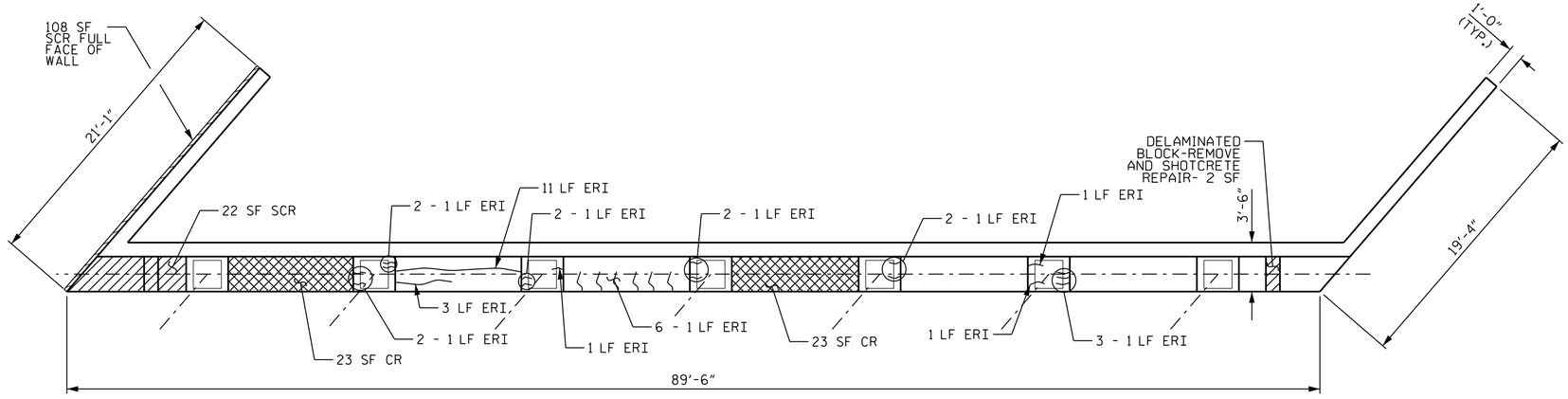

PLAN

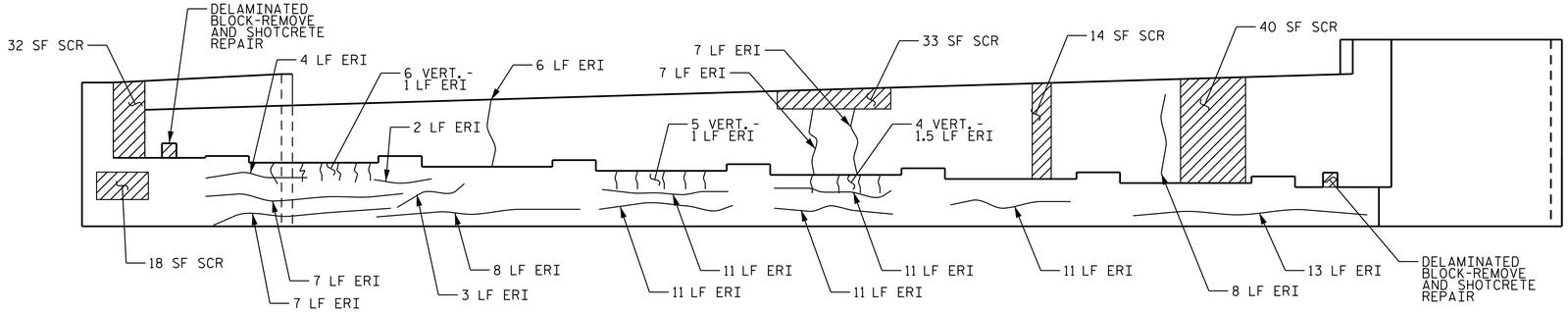

ELEVATION

END BENT NO. 1

AS-BUILT REPAIR QUANTITY TABLE				
END BENT 1	QUANTITIES			
	ESTIMATE		ACTUAL	
SHOTCRETE REPAIRS	AREA SF	VOLUME CF	AREA SF	VOLUME CF
CAP	42.0	10.5		
CURTAIN & WING WALL	227.0	57.0		
CONCRETE REPAIRS	AREA SF	VOLUME CF	AREA SF	VOLUME CF
CAP	46.0	11.5		
EPOXY RESIN INJECTION		LN. FT.		LN. FT.
CAP		152.0		
CURTAIN WALL		28.0		
EPOXY COATING		SQ. FT.	SQ. FT.	
TOP OF CAP		210.0		

NOTES:

REPAIR LOCATIONS AND ESTIMATE OF QUANTITIES ARE BASED ON THE BEST INFORMATION AVAILABLE. IF ADDITIONAL REPAIRS NOT SHOWN ON THE DRAWINGS ARE DEEMED NECESSARY BY THE ENGINEER, THE ENGINEER WILL NOTE ON THE DRAWINGS THE APPROXIMATE LOCATIONS AND DESCRIPTION OF THE REPAIRS AND ENTER THE ACTUAL QUANTITIES INTO THE AS-BUILT REPAIR QUANTITY TABLE.

CLEAN AND REMOVE DEBRIS FROM THE TOP OF THE CAP AND APPLY EPOXY PROTECTIVE COATING. EPOXY COATING SHALL BE APPLIED TO THE TOP SURFACE OF THE CAP. THE CONTRACTOR SHALL NOT COAT THE AREA OF THE CAP BENEATH THE MASONARY PLATES. FOR EPOXY COATING, SEE SPECIAL PROVISIONS.

SHOTCRETE REPAIRS MAY BE REPLACED WITH CONCRETE REPAIRS WITH THE APPROVAL OF THE ENGINEER.

FOR CAP REPAIRS, SEE "TYPICAL CAP AND COLUMN REPAIR DETAILS", SHEET.

FOR SHOTCRETE REPAIR, SEE SPECIAL PROVISIONS.

FOR CONCRETE REPAIR, SEE SPECIAL PROVISIONS.

FOR EPOXY RESIN INJECTION, SEE SPECIAL PROVISIONS.

SHOTCRETE REPAIR (SCR)

CONCRETE REPAIR (CR)

EPOXY RESIN INJECTION (ERI)

PROJECT NO. I-5941

DURHAM COUNTY

BRIDGE NO. 310112

SHEET 1 OF 4

DOCUMENT NOT CONSIDERED FINAL UNLESS ALL SIGNATURES COMPLETED

DocuSigned by: Farzin Asefnia 19141A6AF2E...

NORTH CAROLINA PROFESSIONAL SEAL 20103 ENGINEER FARZIN ASEFNIA

11/13/2023

E.L. ROBINSON ENGINEERING

3362 Six Forks Rd. Raleigh, N.C. 27609 Tel: 984.960.2810 elrobinsonengineering.com License: C-22 9

STATE OF NORTH CAROLINA
DEPARTMENT OF TRANSPORTATION
RALEIGH

SUBSTRUCTURE REPAIR

END BENT 1

REVISIONS						SHEET NO.
NO.	BY:	DATE:	NO.	BY:	DATE:	S2-8
1			3			TOTAL SHEETS
2			4			11

DRAWN BY : M. HOGAN DATE : 3/2023
CHECKED BY : JIA XU DATE : 7/2023
DESIGN ENGINEER OF RECORD: F. ASEFNIA DATE : 11/2023