DocuSign Envelope ID: FF5108DB-6CFC-4E24-82A6-C80B749DDCC4

PROJ. REFERENCE NO.	SHEET NO.
I-5941	TMP-29

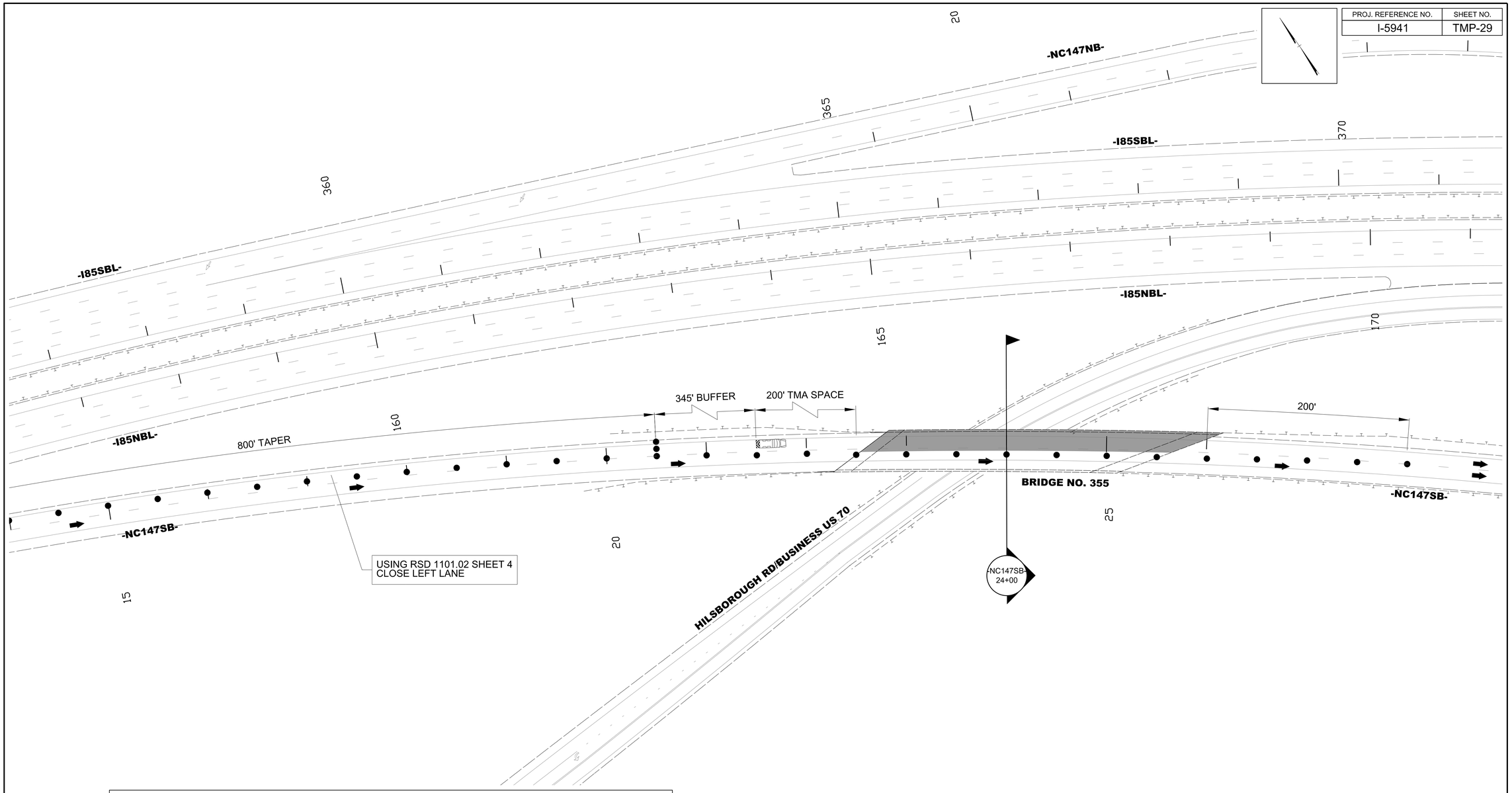

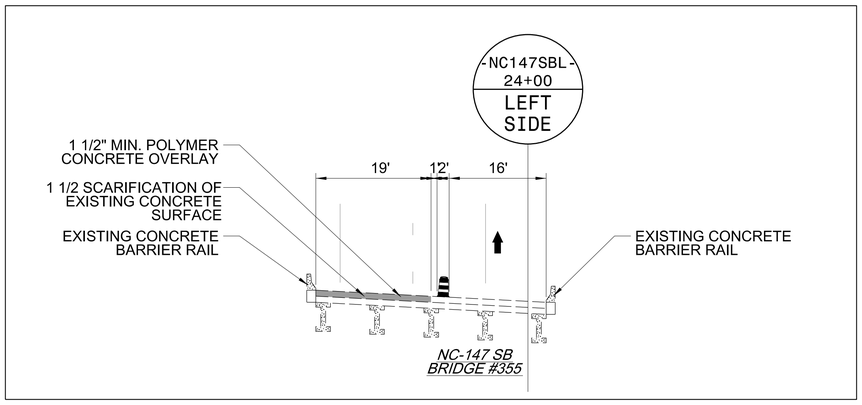

Stantec
Stantec Consulting Services Inc.
801 Jones Franklin Road
Suite 300
Raleigh, NC 27606
Tel. 919.851.6866
Fax. 919.851.7024
www.stantec.com
License No. F-0672

DocuSigned by: J.W. Woolard, Jr. BBC02F49E95C...

NORTH CAROLINA PROFESSIONAL SEAL 19862 ENGINEER J.W. WOOLARD, JR.

11/14/2023

DOCUMENT NOT CONSIDERED FINAL UNLESS ALL SIGNATURES COMPLETED

DIVISION OF HIGHWAYS · STATE OF NORTH CAROLINA · DEPARTMENT OF TRANSPORTATION · WORK ZONE TRAFFIC CONTROL

NC-147 SOUTHBOUND
-NC147SB-
BRIDGE REHABILITATION
LEFT SIDE

11/14/2023
U:\Traffic\Transportation Management Plan\TCP\PLAN SHEETS\I-5941_TMP_29_NC_147_SB.dgn
angood