PROJECT REFERENCE NO.	SHEET NO.
2024CPT.05.09.20921.1, ETC.	11

PAVEMENT SCHEDULE

C1	1" ASPHALT CONCRETE SURFACE COURSE, TYPE S9.5B, AT AN AVERAGE RATE OF 110 LBS. PER SQ. YD.
C2	1¼" ASPHALT CONCRETE SURFACE COURSE, TYPE S9.5B, AT AN AVERAGE RATE OF 137.5 LBS. PER SQ. YD.
C3	1½" ASPHALT CONCRETE SURFACE COURSE, TYPE S9.5B, AT AN AVERAGE RATE OF 165 LBS. PER SQ. YD.
C4	1½" ASPHALT CONCRETE SURFACE COURSE, TYPE S9.5C, AT AN AVERAGE RATE OF 168 LBS. PER SQ. YD.

S	SHOULDER RECONSTRUCTION
U	EXISTING PAVEMENT
V1	1½" MILLING
V2	0" - 1 ½" MILLING

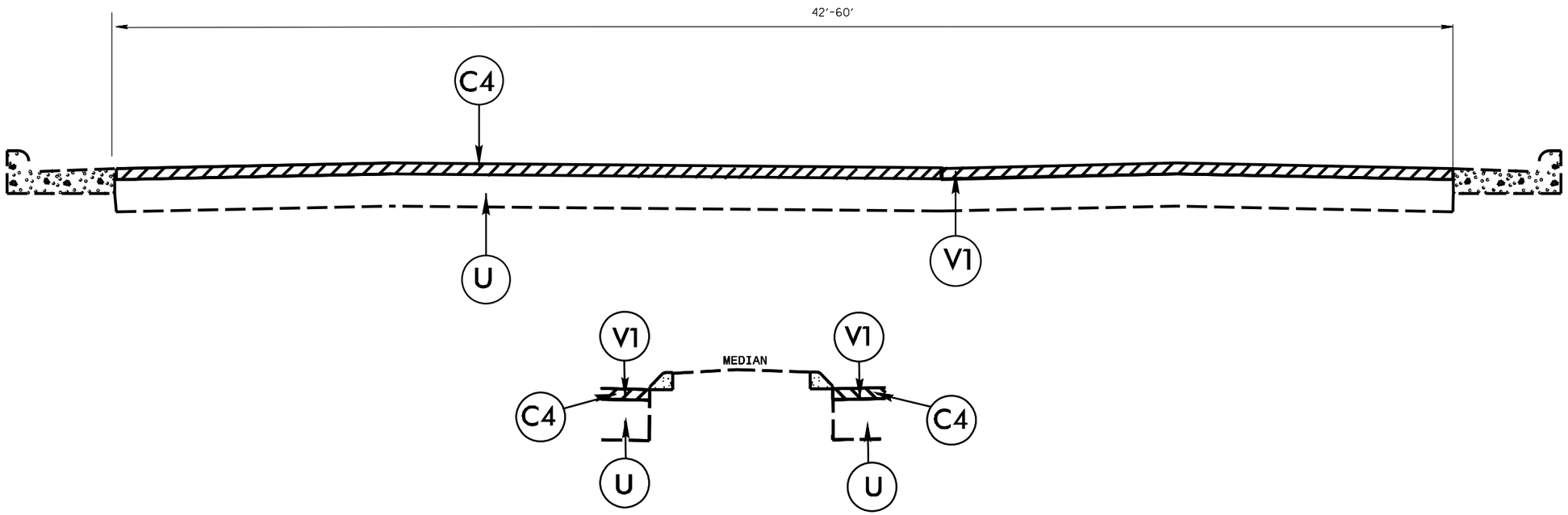

TYPICAL SECTION NO. 5