PROJECT ID. NO.	SHEET NO.
U-5808	Sig.M2

Fabrication Details – All Metal Poles

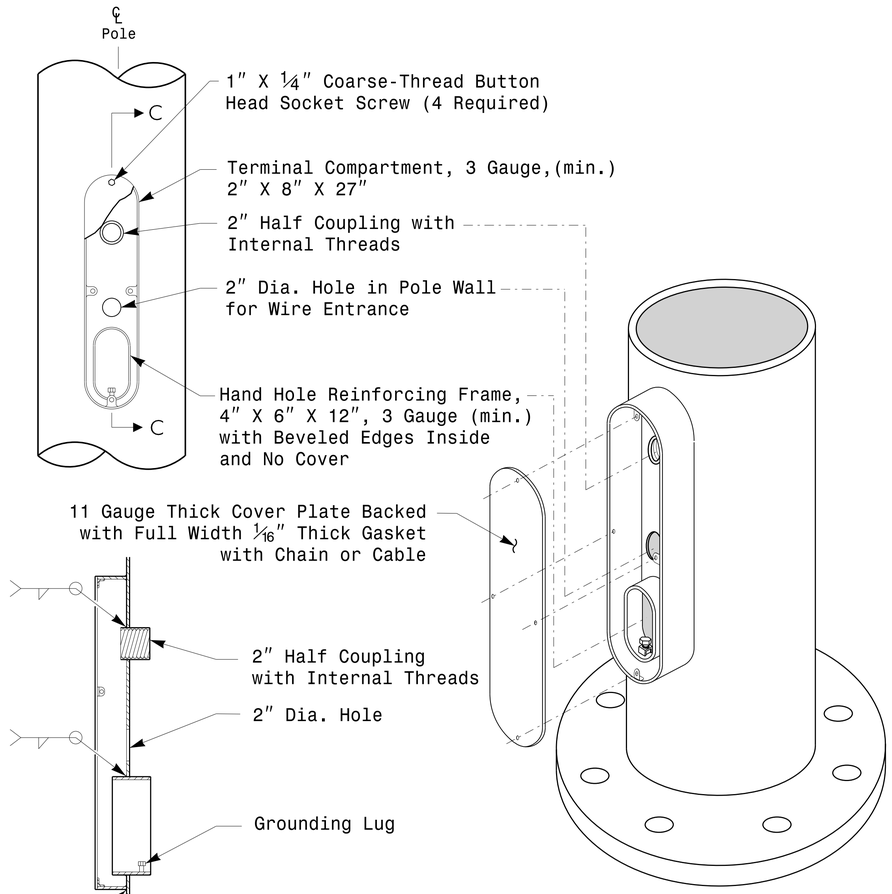

Section C-C

Note: Unless otherwise specified, locate Terminal Compartment 1 foot above the pole base plate at 180 degrees on the pole's radial index.

Terminal Compartment Detail

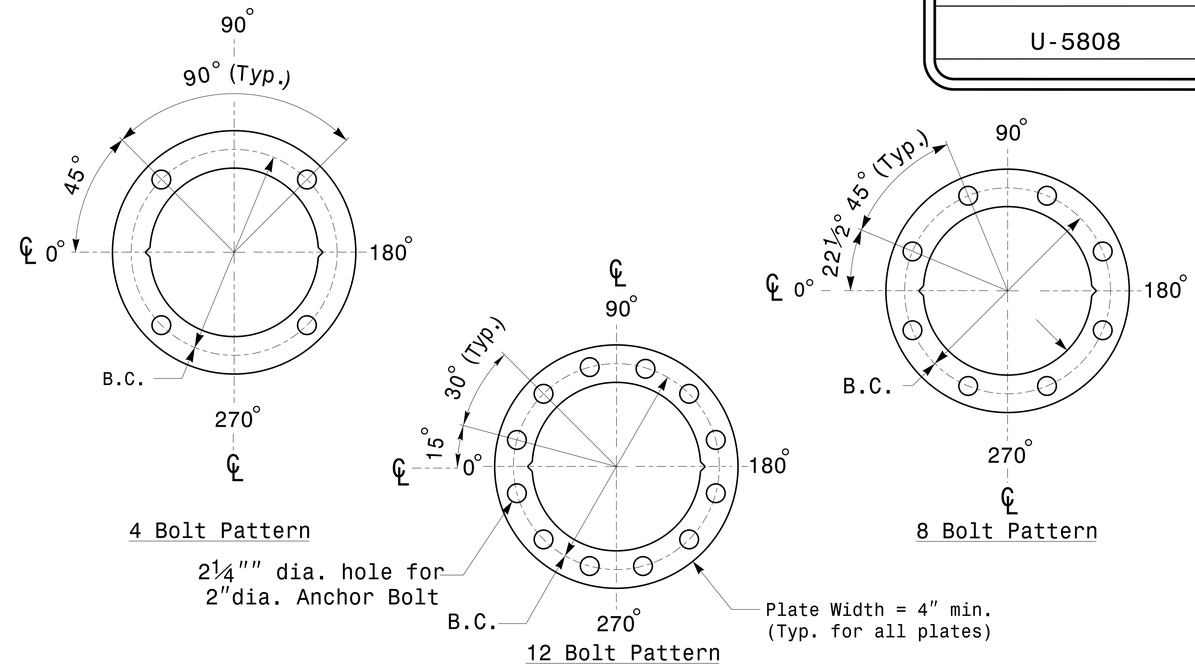

Construct Templates and Plates from ¼" min. thick Steel. Galvanizing is not required.

Base Plate Template and Anchor Bolt Lock Plate Details

MFG _____ MFG. DATE: MM/YY
SHAFT D/T/L/Y ----/----/----/----
ARM-A D/T/L/Y ----/----/----/----
----/----/----/----
ARM-B D/T/L/Y ----/----/----/----
----/----/----/----
A.B. DIA./B.C./L/Y ----/----/----/----
NCDOT SIG. INV. NO. _____
NCDOT POLE NO. _____

Shaft I.D. Tag
(Provide on Shaft of Strain Poles and Mast Arm Poles Shaft)

MFG _____ MFG. DATE: MM/YY
SECTION D/T/L/Y ----/----/----/----
NCDOT SIG. INV. NO. _____
NCDOT POLE NO. _____

Arm I.D. Tag
(Provide on each section of a multi-section mast arm.)

Notes:
1) D= Diameter, T= Thickness, L= Length, Y= Yield Strength
2) A.B. = Anchor Bolt
3) B.C. = Bolt Circle of Anchor Bolts
4) If Custom Design, use "NCDOT STANDARD" line for Signal Inv. Number and pole I.D. number
5) See drawing M3 and M4 for mounting positions of I.D. tags.

Identification Tag Details

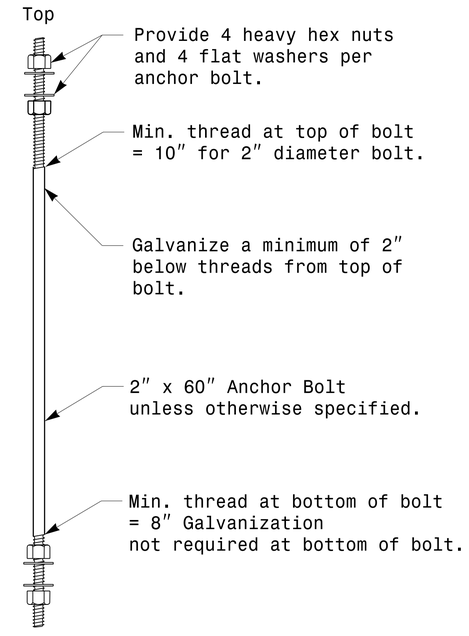

Anchor Bolt Detail

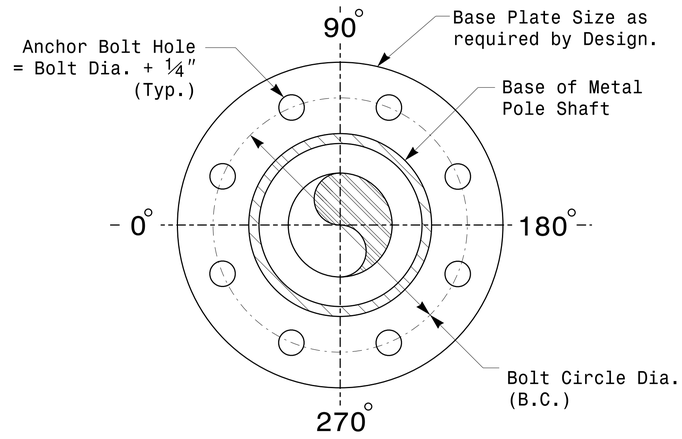

Note: Base plate may be circular,octagonal,square or rectangular in shape.

Typical Base Plate Detail

Prepared in the Offices of:
Transportation Mobility and Safety Division
Signal Design Section
750 N.Greenfield Pkwy,Garner,NC 27529

SCALE
0 NA
NONE

Typical Fabrication Details For All Metal Poles

PLAN DATE:	OCTOBER 2017	DESIGNED BY:	C.F.ANDREWS
PREPARED BY:	N. BITTING	REVIEWED BY:	D.C. SARKAR

REVISIONS	INIT.	DATE

SEAL
NORTH CAROLINA PROFESSIONAL SEAL 028094 ENGINEER DEBESH C. SARKAR

DocuSigned by: Debesh C. Sarkar
44E8E32B4D6A4
SIGNATURE
10/11/2017
DATE

11-OCT-2017 08:30
S:\ITS&SU\ITS Signals\Signal Design Section\Eastern Region\MM Sheets\2016\2014 Sig.M2 Std. Fabrication Details-All Poles..dgn
rnzinser