Kimley»Horn
200 SOUTH TRYON ST, SUITE 200
CHARLOTTE, N.C. 28202

PROJECT REFERENCE NO.	SHEET NO.
U-5907	UC-3A
DESIGNED BY: MAS	
DRAWN BY: SJJ	
CHECKED BY: MAS	
APPROVED BY: ---	
REVISED:	
NORTH CAROLINA DEPARTMENT OF TRANSPORTATION	
UTILITIES ENGINEERING SEC. PHONE:(919)707-6690 FAX:(919)250-4151	UTILITY CONSTRUCTION PLANS ONLY

NORTH CAROLINA PROFESSIONAL SEAL 027670 ENGINEER MATTHEW A. SHOCKSMITH
DocuSigned by: Matthew A. Shocksmith
7/17/2023

UTILITY CONSTRUCTION

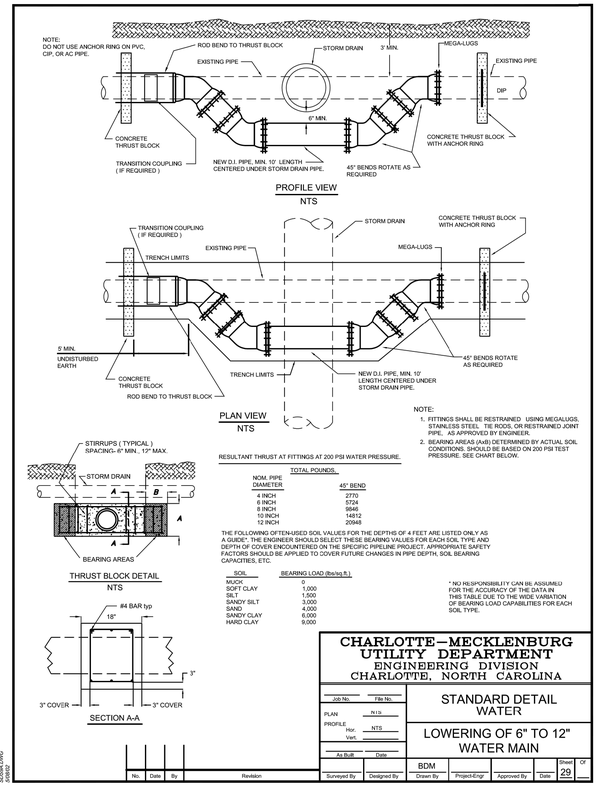

NOTE:
1. FITTINGS SHALL BE RESTRAINED USING MEGALUGS, STAINLESS STEEL TIE RODS, OR RESTRAINED JOINT PIPE. AS APPROVED BY ENGINEER.
2. BEARING AREAS (Ax8) DETERMINED BY ACTUAL SOIL CONDITIONS. SHOULD BE BASED ON 200 PSI TEST PRESSURE. SEE CHART BELOW.

RESULTANT THRUST AT FITTINGS AT 200 PSI WATER PRESSURE.

NOM. PIPE DIAMETER	TOTAL POUNDS 45° BEND
4 INCH	2770
6 INCH	5724
8 INCH	9846
10 INCH	14812
12 INCH	20948

THE FOLLOWING OFTEN-USED SOIL VALUES FOR THE DEPTHS OF 4 FEET ARE LISTED ONLY AS A GUIDE*. THE ENGINEER SHOULD SELECT THESE BEARING VALUES FOR EACH SOIL TYPE AND DEPTH OF COVER ENCOUNTERED ON THE SPECIFIC PIPELINE PROJECT. APPROPRIATE SAFETY FACTORS SHOULD BE APPLIED TO COVER FUTURE CHANGES IN PIPE DEPTH, SOIL BEARING CAPACITIES, ETC.

SOIL	BEARING LOAD (lbs/sq.ft.)
MUCK	0
SOFT CLAY	1,000
SILT	1,500
SANDY SILT	3,000
SAND	4,000
SANDY CLAY	6,000
HARD CLAY	9,000

* NO RESPONSIBILITY CAN BE ASSUMED FOR THE ACCURACY OF THE DATA IN THIS TABLE DUE TO THE WIDE VARIATION OF BEARING LOAD CAPABILITIES FOR EACH SOIL TYPE.

CHARLOTTE–MECKLENBURG UTILITY DEPARTMENT
ENGINEERING DIVISION
CHARLOTTE, NORTH CAROLINA

Job No.	File No.	STANDARD DETAIL WATER
PLAN / PROFILE Hor. NTS Vert.		LOWERING OF 6" TO 12" WATER MAIN
As Built	Date	
BDM		

No.	Date	By	Revision	Surveyed By	Designed By	Drawn By	Project Engr	Approved By	Date	Sheet 29	Of

SIDMA 07/07 03/99/2

MANUFACTURERS:
SOUTHERN METER C.H. 5/8" x 3/4" METER BOX BODY
BROOKS #36MB METER BOX BODY
OLDCASTLE #MB36 METER BODY
BES #CO9W METER BOX BODY
CHRISTY B9 METER BOX BODY

NOTES:
A. METER BOX SHALL ACCOMMODATE COMPANION PLASTIC METER BOX LID - SEE STANDARD DETAIL.
B. MINOR DIMENSION VARIATIONS ARE PERMITTED , BASED ON MANUFACTURER'S PRODUCT LINES. PROVIDED THE CMUD STANDARD PLASTIC LID FITS PROPERLY.
C. CONCRETE SHALL BE MINIMUM f ' c = 3000 PSI COMPRESSIVE STRENGTH.
D. DESIGN SHALL CONFORM TO ASTM C858-SPECIFICATIONS FOR " UNDERGROUND PRECAST CONCRETE UTILITY STRUCTURE ".
E. STEEL REINFORCING DESIGN SHALL CONFORM TO ASTM C 857.
F. WELDED WIRE FABRIC SHALL CONFORM TO ASTM A 185 AND A 82.

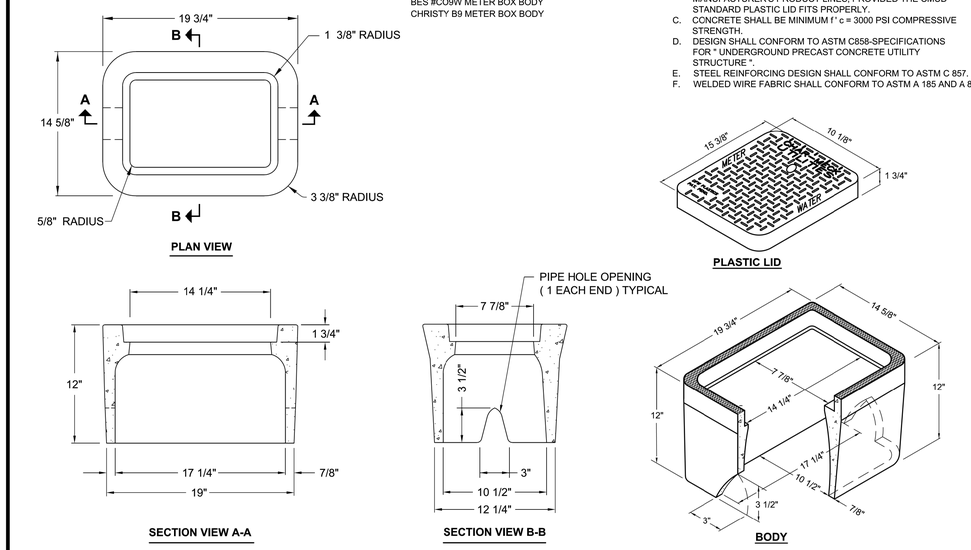

WEIGHT - 70 LB. (MIN.) - 85 LB (MAX.)

NO SCALE
STANDARD NO. AA
VERSION NO. V1.0
EFFECTIVE DATE 8.23.2011

PRECAST CONCRETE METER BOX
FOR 3/4 - INCH DOMESTIC WATER SERVICE

CHARLOTTE-MECKLENBURG UTILITIES
STANDARD DETAILS
WATER
CHARLOTTE

MANUFACTURERS:
SOUTHERN METER #C.H. 2 METER BOX BODY
BROOKS #65MB METER BOX BODY
OLDCASTLE PRECAST #MB65 METER BOX BODY

NOTES:
A. METER BOX SHALL ACCOMMODATE COMPANION PLASTIC METER BOX LID - SEE STANDARD DETAIL.
B. MINOR DIMENSION VARIATIONS ARE PERMITTED BASED ON MANUFACTURER'S PRODUCT LINES, PROVIDED THE CMUD STANDARD PLASTIC LID FITS PROPERLY.
C. CONCRETE SHALL BE MINIMUM f ' c = 3000 PSI COMPRESSIVE STRENGTH.
D. DESIGN SHALL CONFORM TO ASTM C858-SPECIFICATIONS FOR " UNDERGROUND PRECAST CONCRETE UTILITY.
E. STEEL REINFORCING DESIGN SHALL CONFORM TO ASTM C 857.
F. WELDED WIRE FABRIC SHALL CONFORM TO ASTM A 185 AND A 82.

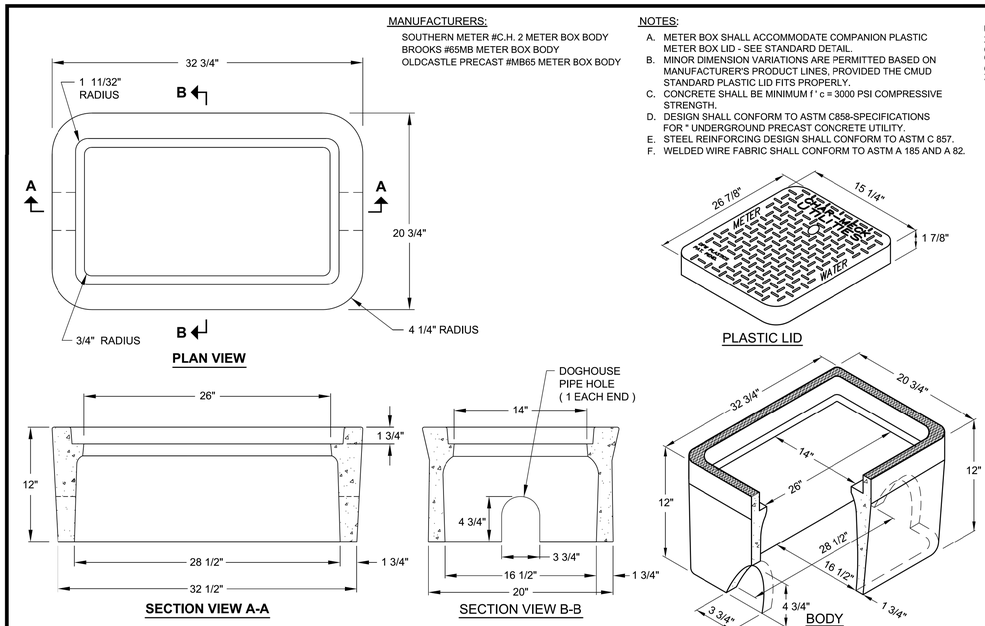

WEIGHT - 150 LB. (MIN.) - 170 LB (MAX.)

NO SCALE
STANDARD NO. BB
VERSION NO. V1.0
EFFECTIVE DATE 8.23.2011

PRECAST CONCRETE METER BOX
FOR 1 - INCH WATER SERVICE

CHARLOTTE-MECKLENBURG UTILITIES
STANDARD DETAILS
WATER
CHARLOTTE

REVISIONS

5/14/99

7/17/2023