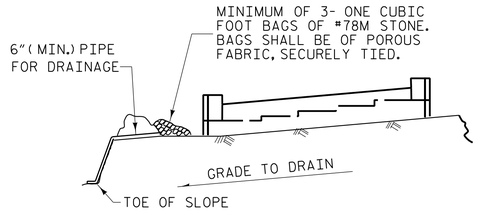

BAGGED STONE AND PIPE SHALL BE PLACED IMMEDIATELY AFTER COMPLETION OF END BENT EXCAVATION. PIPE MAY BE EITHER CONCRETE, CORRUGATED STEEL, CORRUGATED ALUMINUM ALLOY, OR CORRUGATED PLASTIC. PERFORATED PIPE WILL NOT BE ALLOWED.

BAGGED STONE SHALL REMAIN IN PLACE UNTIL THE ENGINEER DIRECTS THAT IT BE REMOVED. THE CONTRACTOR SHALL REMOVE AND DISPOSE OF SILT ACCUMULATIONS AT BAGGED STONE WHEN SO DIRECTED BY THE ENGINEER. BAGS SHALL BE REMOVED AND REPLACED WHENEVER THE ENGINEER DETERMINES THAT THEY HAVE DETERIORATED AND LOST THEIR EFFECTIVENESS.

NO SEPARATE PAYMENT WILL BE MADE FOR THIS WORK AND THE ENTIRE COST OF THIS WORK SHALL BE INCLUDED IN THE UNIT CONTRACT PRICE BID FOR THE SEVERAL PAY ITEMS.

TEMPORARY DRAINAGE AT END BENT

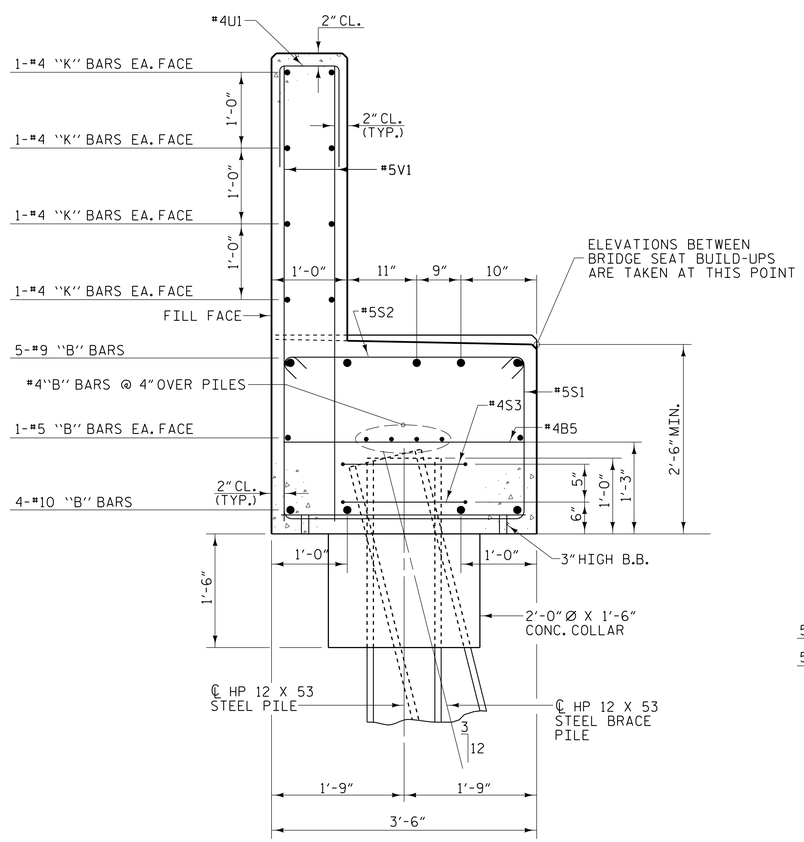

SECTION A-A

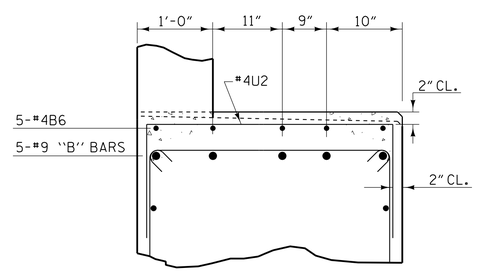

PART SECTION B-B

BAR TYPES

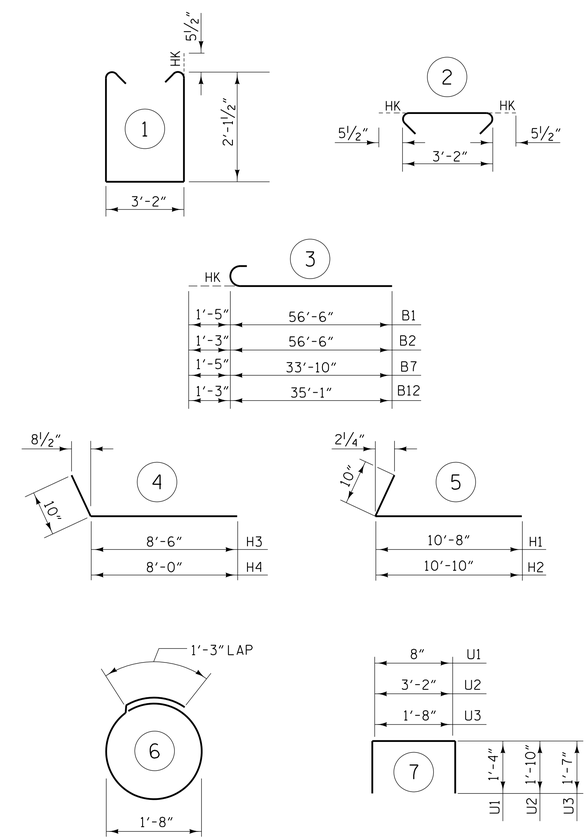

ALL BAR DIMENSIONS ARE OUT TO OUT

BILL OF MATERIAL

END BENT 1-STAGE I

BAR	NO.	SIZE	TYPE	LENGTH	WEIGHT
B1	4	#10	3	57'-11"	997
B2	5	#9	3	57'-9"	982
B3	2	#5	STR	59'-0"	123
B4	8	#4	STR	30'-9"	164
B5	14	#4	STR	3'-2"	30
B6	20	#4	STR	3'-2"	42
D1	5	#5	STR	1'-6"	8
D2	4	#4	STR	3'-0"	8
H1	9	#5	5	11'-6"	108
H2	9	#5	5	11'-8"	110
K1	16	#4	STR	30'-6"	326
S1	49	#5	1	8'-4"	426
S2	49	#5	2	4'-1"	209
S3	15	#4	6	6'-6"	65
U1	55	#4	7	3'-4"	122
U2	16	#4	7	6'-10"	73
U3	2	#6	7	4'-10"	15
V1	110	#5	STR	6'-0"	688
V2	24	#4	STR	6'-1"	98

TOTAL REINFORCING STEEL 4594 LBS

CLASS "A" CONCRETE - CU. YARDS
POUR 1
(CAP, COLLARS, LOWER WINGS) 20.8 CU. YDS.
POUR 2
(UPPER WINGS & BACKWALL) 9.6 CU. YDS.
TOTAL 30.4 CU. YDS.

PILE EXCAVATION IN SOIL - LIN. FT. 126

PILE EXCAVATION NOT IN SOIL - LIN. FT. 42

HP 12 X 53 STEEL PILES
8 PILES REQUIRED - LIN. FEET 280

PILE DRIVING EQUIPMENT SETUP FOR
HP 12 X 53 STEEL PILES - EACH 8

END BENT 1-STAGE II

BAR	NO.	SIZE	TYPE	LENGTH	WEIGHT
B5	17	#4	STR	3'-2"	36
B6	25	#4	STR	3'-2"	53
B7	4	#10	3	35'-3"	607
B8	5	#9	STR	40'-6"	689
B9	4	#10	STR	41'-0"	706
B10	8	#4	STR	36'-3"	194
B11	4	#5	STR	36'-10"	154
B12	5	#9	3	36'-4"	618
H3	12	#4	4	9'-4"	75
H4	12	#4	4	8'-10"	71
H5	6	#4	STR	6'-2"	25
K2	16	#4	STR	36'-4"	388
S1	59	#5	1	8'-4"	513
S2	59	#5	2	4'-1"	251
S3	16	#4	6	6'-6"	69
U1	63	#4	7	3'-4"	140
U2	20	#4	7	6'-10"	91
V1	126	#5	STR	6'-0"	789
V3	32	#4	STR	8'-3"	176

TOTAL REINFORCING STEEL 5645 LBS

CLASS "A" CONCRETE - CU. YARDS
POUR 1
(CAP, COLLARS, LOWER WINGS) 25.7 CU. YDS.
POUR 2
(UPPER WINGS & BACKWALL) 10.7 CU. YDS.
TOTAL 36.4 CU. YDS.

PILE EXCAVATION IN SOIL - LIN. FT. 126

PILE EXCAVATION NOT IN SOIL - LIN. FT. 42

HP 12 X 53 STEEL PILES
7 PILES REQUIRED - LIN. FEET 245

PILE DRIVING EQUIPMENT SETUP FOR
HP 12 X 53 STEEL PILES - EACH 7

PROJECT NO. U-5839
HAYWOOD COUNTY
STATION: 24+64.13 -L- POC

SHEET 4 OF 4

STATE OF NORTH CAROLINA
DEPARTMENT OF TRANSPORTATION
RALEIGH

SUBSTRUCTURE
END BENT 1
DETAILS

PLANS PREPARED BY:
NV5 ENGINEERS & CONSULTANTS, INC.
3300 REGENCY PARKWAY, SUITE 100
CARY, NC 27518
P: 919.851.1912 www.NV5.com
NC License # F-1333

DOCUMENT NOT CONSIDERED FINAL UNLESS ALL SIGNATURES COMPLETED

DocuSigned by:
BEB2398D922047D

NORTH CAROLINA PROFESSIONAL SEAL 14114 ENGINEER ROBERT C. LARSON
5/18/2023

REVISIONS							SHEET NO.
NO.	BY:	DATE:	NO.	BY:	DATE:		S1-44
1			3				TOTAL SHEETS
2			4				63

DRAWN BY : W. B. ALLEN DATE : 6/20
CHECKED BY : Z. H. BROWN DATE : 8/20
DESIGN ENGINEER OF RECORD: R. C. LARSON DATE : 4/23

DocuSigned by:
BEB2398D922047D

5/17/2023 7:41:0 PM R:\Structures\3 span Bridge over RR\44 U5839_SWU_E4_43084.dgn