NOTES

STIRRUPS AND U2 BARS IN THE CAP MAY BE SHIFTED AS NECESSARY TO CLEAR ANCHOR BOLTS.

BACKWALL SHALL BE PLACED BEFORE APPLYING THE EPOXY PROTECTIVE COATING.

THE TOP SURFACE AREA OF THE END BENT CAP SHALL BE CURED IN ACCORDANCE WITH THE STANDARD SPECIFICATIONS EXCEPT THAT THE MEMBRANE CURING COMPOUND METHOD SHALL NOT BE USED.

THE TOP SURFACE OF THE END BENT CAP EXCEPT THE BRIDGE SEAT BUILDUPS SHALL BE SLOPED TRANSVERSELY FROM THE FILL FACE TO THE BACK FACE AT THE RATE OF 2%.

FOR "PILE SPLICE DETAILS", SEE END BENT 2.

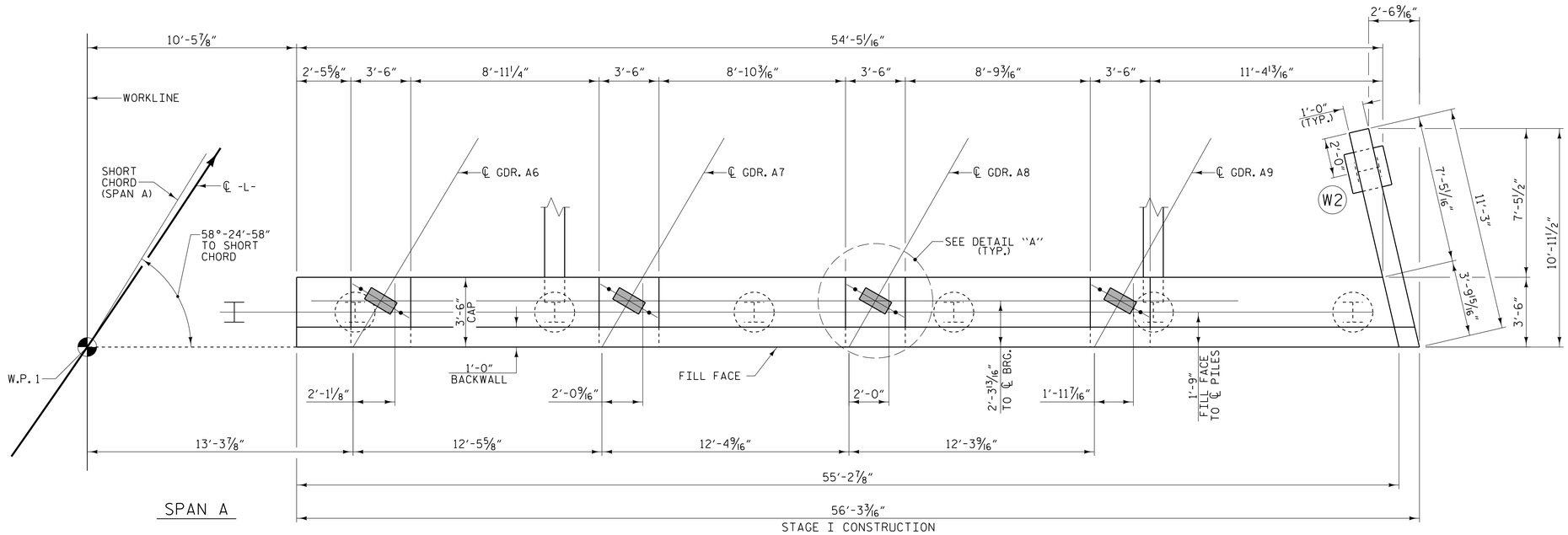

SPAN A

PLAN

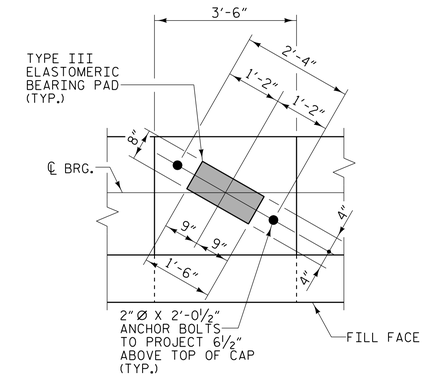

DETAIL "A"

(TYP. EACH GIRDER)

TOP OF PILE ELEVATIONS	
PILE NO.	ELEVATION
8	2651.02
9	2651.11
10	2651.23
11	2651.36
12	2651.48
13	2651.61
14	2651.73

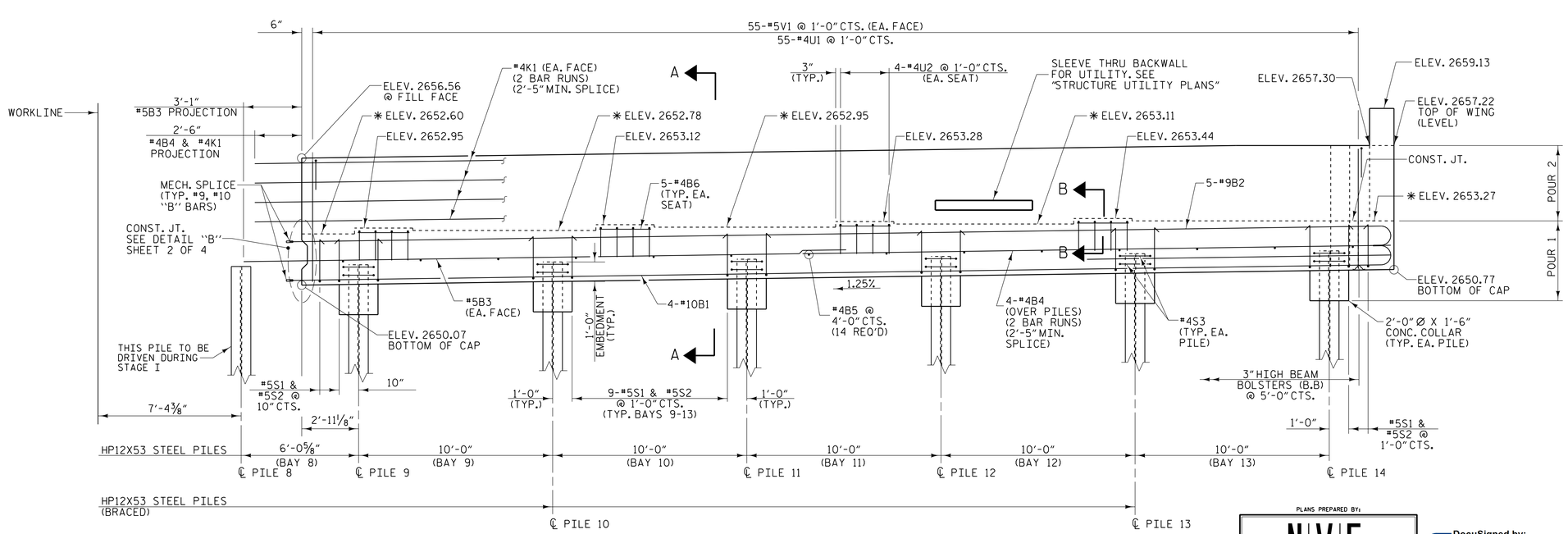

✳ FOR LOCATION OF ELEVATIONS BETWEEN BRIDGE SEAT BUILD-UPS. SEE SECTION A-A SHEET 4 OF 4.

ELEVATION

(FOR SECTIONS A-A AND B-B, SEE SHEET 4 OF 4)

PROJECT NO. U-5839

HAYWOOD COUNTY

STATION: 24+64.13 -L- POC

SHEET 1 OF 4

STATE OF NORTH CAROLINA
DEPARTMENT OF TRANSPORTATION
RALEIGH

SUBSTRUCTURE
END BENT 1
STAGE I

PLANS PREPARED BY:
NV5 ENGINEERS & CONSULTANTS, INC.
3300 REGENCY PARKWAY, SUITE 100
CARY, NC 27518
P: 919.851.1912 www.NV5.com
NC License # F-1333

DocuSigned by:
BEB2398D9220470...

NORTH CAROLINA PROFESSIONAL SEAL 14114 ENGINEER ROBERT C. LARSON
5/18/2023

DOCUMENT NOT CONSIDERED FINAL UNLESS ALL SIGNATURES COMPLETED

DRAWN BY :	W. B. ALLEN	DATE :	5/20
CHECKED BY :	Z. H. BROWN	DATE :	6/20
DESIGN ENGINEER OF RECORD:	R. C. LARSON	DATE :	4/23

DocuSigned by:
BEB2398D9220470...

REVISIONS							
NO.	BY:	DATE:	NO.	BY:	DATE:	SHEET NO.	
1			3			S1-41	
2			4			TOTAL SHEETS	
						63	

5/17/2023 7:40:09 PM R:\Structures\3_span Bridge over RR\U5839_SMU_EL_430084.dgn