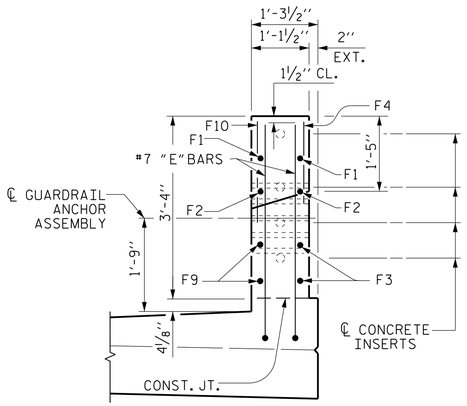

④ END VIEW

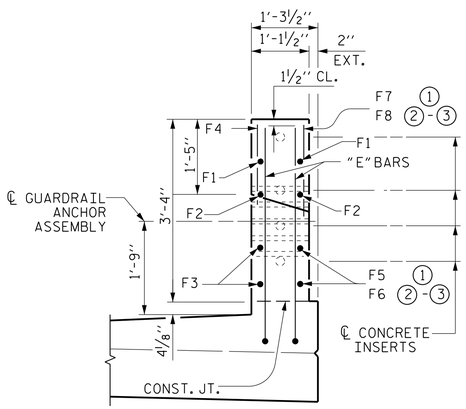

①-③ END VIEW

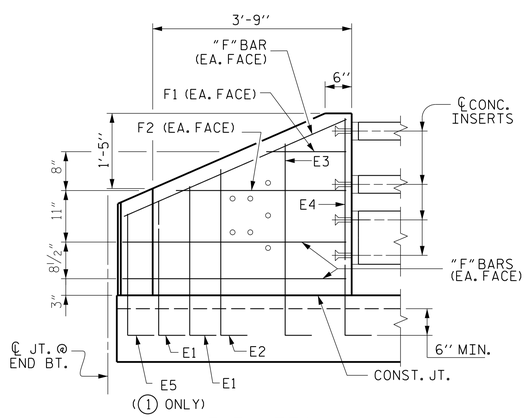

ELEVATION

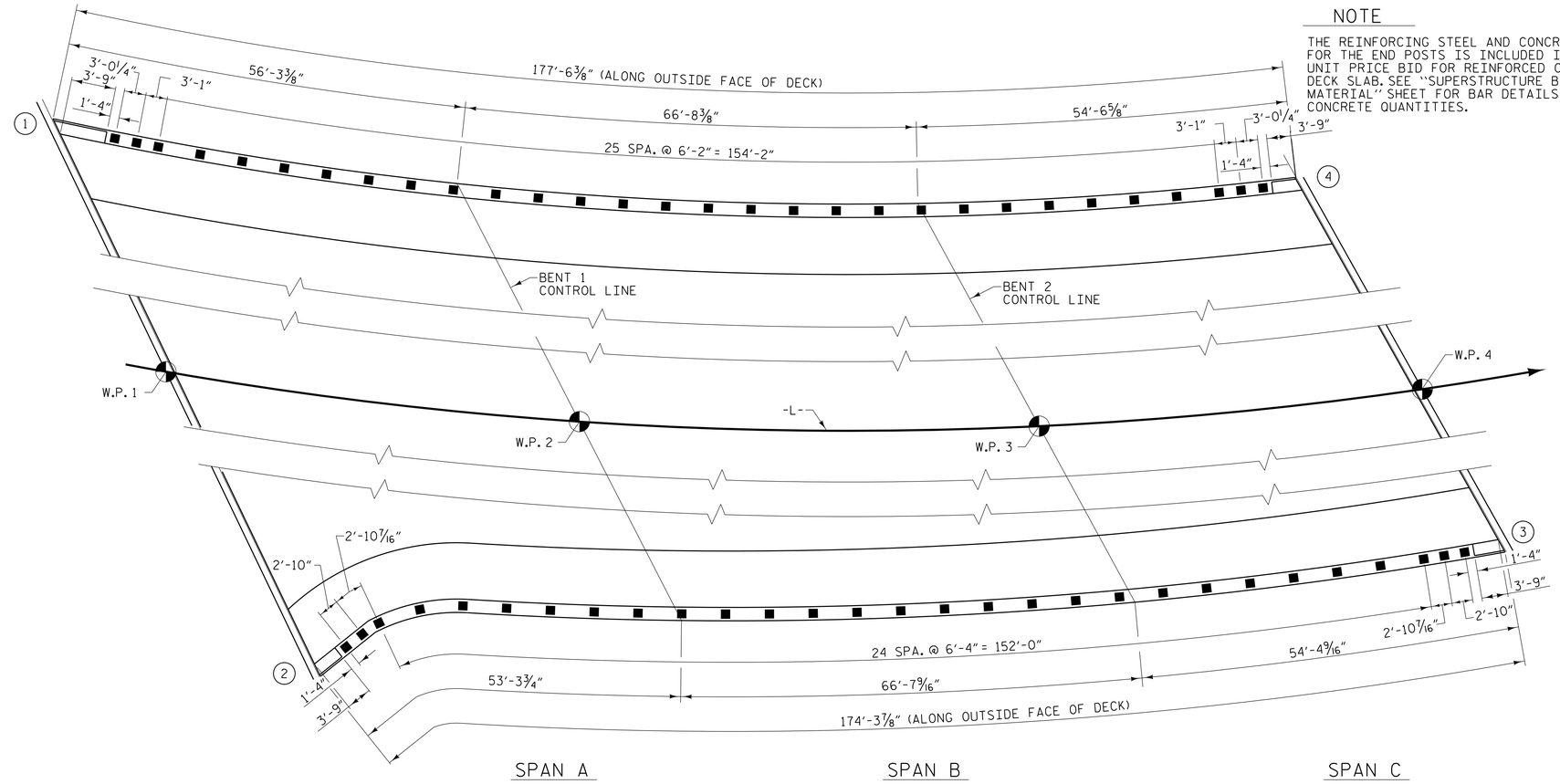

PLAN OF RAIL POST SPACINGS

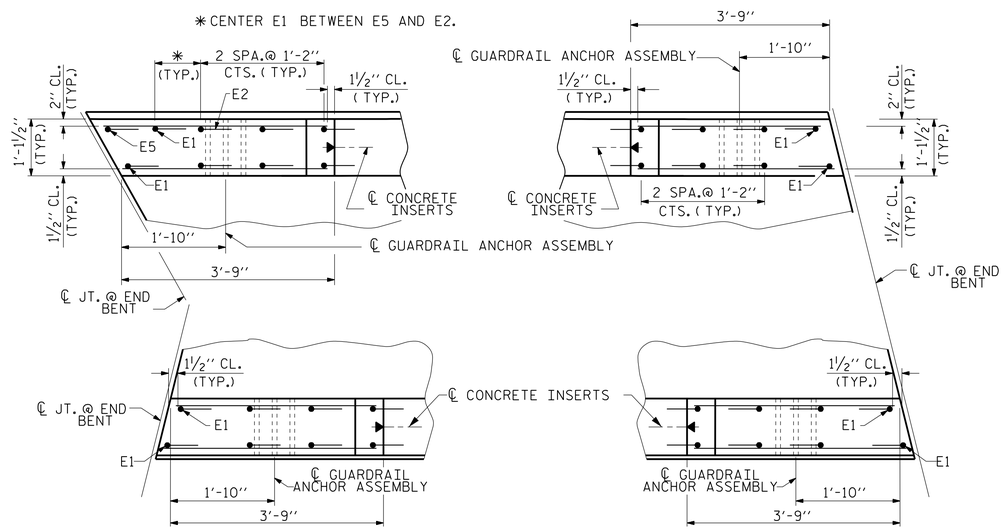

PLAN

END POST DETAILS

NOTE

THE REINFORCING STEEL AND CONCRETE FOR THE END POSTS IS INCLUDED IN THE UNIT PRICE BID FOR REINFORCED CONCRETE DECK SLAB. SEE "SUPERSTRUCTURE BILL OF MATERIAL" SHEET FOR BAR DETAILS AND CONCRETE QUANTITIES.

PLANS PREPARED BY:
NV5 ENGINEERS & CONSULTANTS, INC.
3300 REGENCY PARKWAY, SUITE 100
CARY, NC 27518
P: 919.851.1912 www.NV5.com
NC License # F-1333

PROJECT NO. U-5839

HAYWOOD COUNTY

STATION: 24+64.13 -L- POC

STATE OF NORTH CAROLINA
DEPARTMENT OF TRANSPORTATION
RALEIGH

SUPERSTRUCTURE

RAIL POST SPACINGS AND END POST DETAILS

REVISIONS						SHEET NO.
NO.	BY:	DATE:	NO.	BY:	DATE:	S1-32
1			3			TOTAL SHEETS
2			4			63

DOCUMENT NOT CONSIDERED FINAL UNLESS ALL SIGNATURES COMPLETED

DocuSigned by: BEB2398D9220470...

NORTH CAROLINA PROFESSIONAL SEAL 14114 ENGINEER ROBERT C. LARSON

5/18/2023

DRAWN BY :	W. B. ALLEN	DATE :	10/19
CHECKED BY :	Z. H. BROWN	DATE :	1/20
DESIGN ENGINEER OF RECORD:	R. C. LARSON	DATE :	4/23

DocuSigned by: BEB2398D9220470...

5/17/2023 7:46:18 PM R:\Structures\3 span Bridge over RR\32 U5839_SWU_3MR4_43084.dgn