NOTES:

FOR SECTIONS A-A AND B-B, SEE SHEET 2 OF 2.

FOR SECTION THROUGH COLUMN, SEE SHEET 2 OF 2.

HOOKS ON "V" AND "M" BARS MAY BE TURNED AS NECESSARY FOR PLACING REINFORCING STEEL.

STIRRUPS IN CAP MAY BE SHIFTED AS NECESSARY TO CLEAR ANCHOR BOLTS.

FOR PILE SPLICE DETAILS, SEE END BENT 2 STAGE 1 SHEET 3 OF 3.

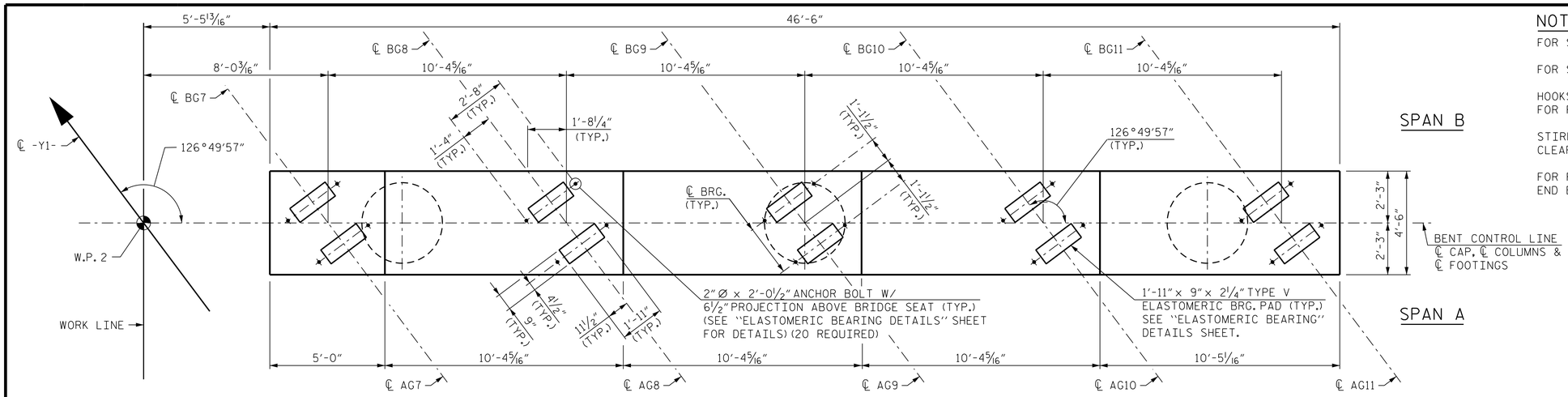

PLAN

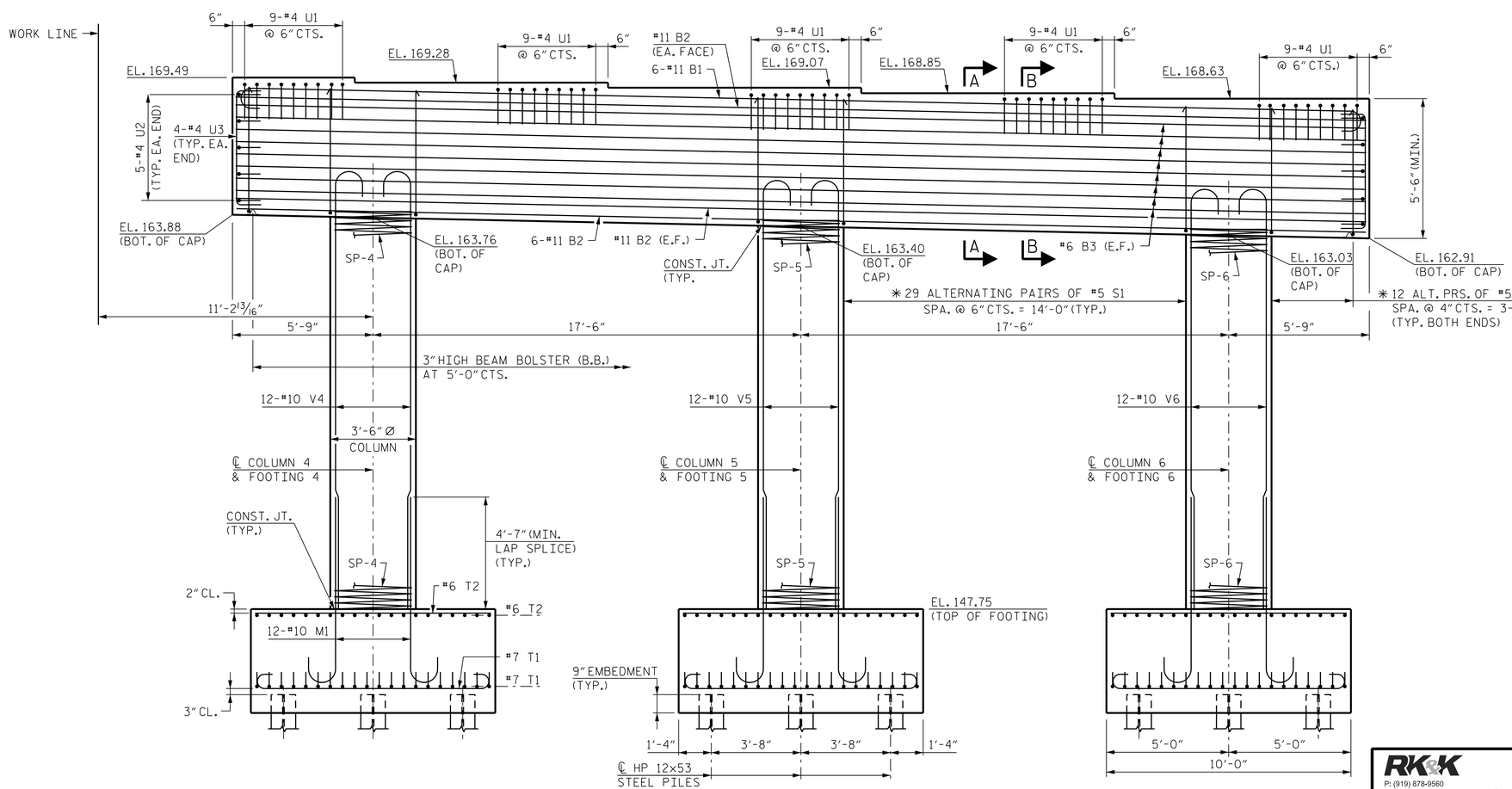

ELEVATION

(DIMENSIONS AND REINFORCING STEEL ARE TYPICAL FOR EACH COLUMN AND FOOTING, UNLESS NOTED OTHERWISE)

* INVERT ALTERNATE PAIRS OF STIRRUPS

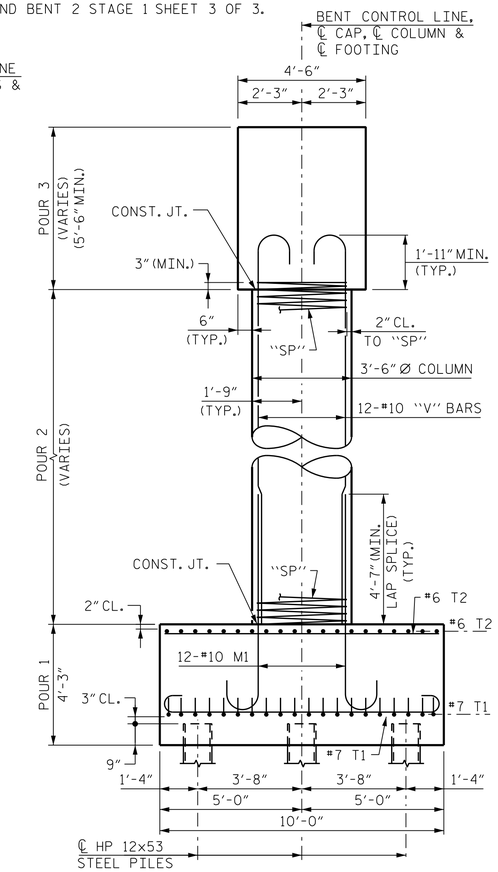

END ELEVATION

(DIMENSIONS AND REINFORCING STEEL ARE TYPICAL FOR EACH FOOTING AND COLUMN)

PROJECT NO. I-5972

JOHNSTON COUNTY

STATION: 36+93.50 -Y1-

SHEET 1 OF 2

STATE OF NORTH CAROLINA
DEPARTMENT OF TRANSPORTATION
RALEIGH

SUBSTRUCTURE
BENT 1
PLAN AND ELEVATION
STAGE 1

RK&K
P: (919) 878-9560
8601 Six Forks Road, Forum 1 Suite 700
Raleigh, North Carolina 27615 | NC License No. F-0112
Engineers | Construction Managers | Planners | Scientists
www.rkk.com
Responsive People | Creative Solutions

NORTH CAROLINA PROFESSIONAL SEAL 15825 ENGINEER BRUCE D. KLAPPENBACH
Bruce D. Klappenbach
D118A2E0
10/4/2021

DOCUMENT NOT CONSIDERED FINAL UNLESS ALL SIGNATURES COMPLETED

REVISIONS						SHEET NO.
NO.	BY:	DATE:	NO.	BY:	DATE:	S-41
1			3			TOTAL SHEETS
2			4			54

DRAWN BY : B. A. HAAG DATE : JUN 2021
CHECKED BY : D. M. RAGAN DATE : JUN 2021
DESIGN ENGINEER OF RECORD : B. D. KLAPPENBACH DATE : JUN 2021

bhaag
10/4/2021
R:\Structures\DGN\BR_500066\Final\I5972_SMU_B1_1A_500066.dgn