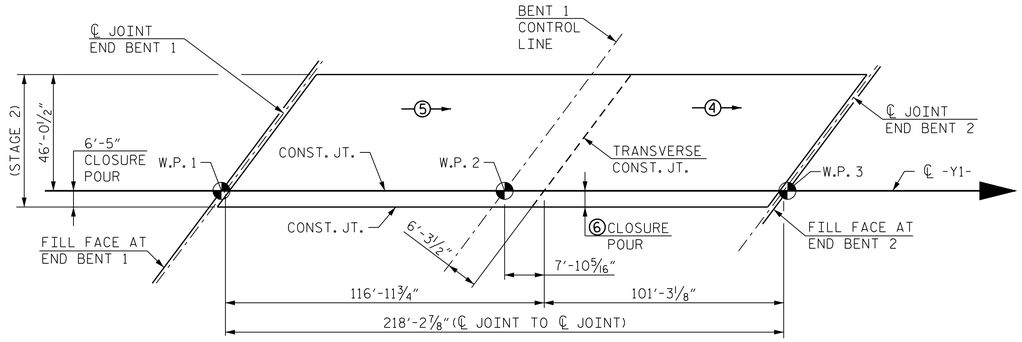

POURING SEQUENCE

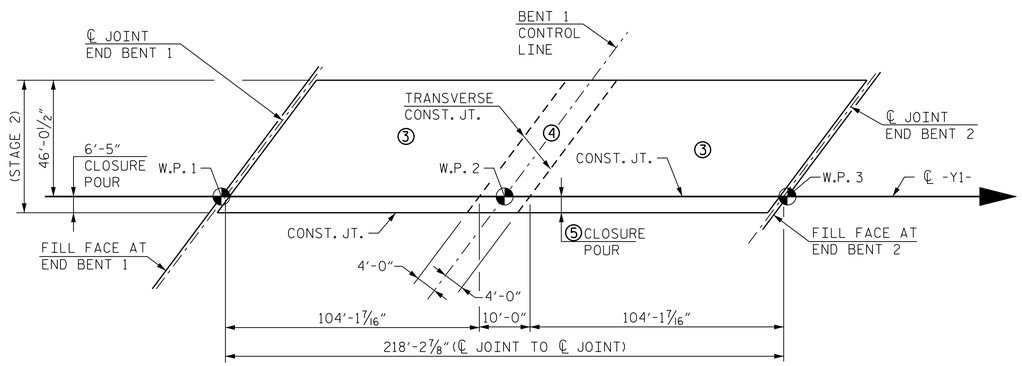

OPTIONAL POURING SEQUENCE

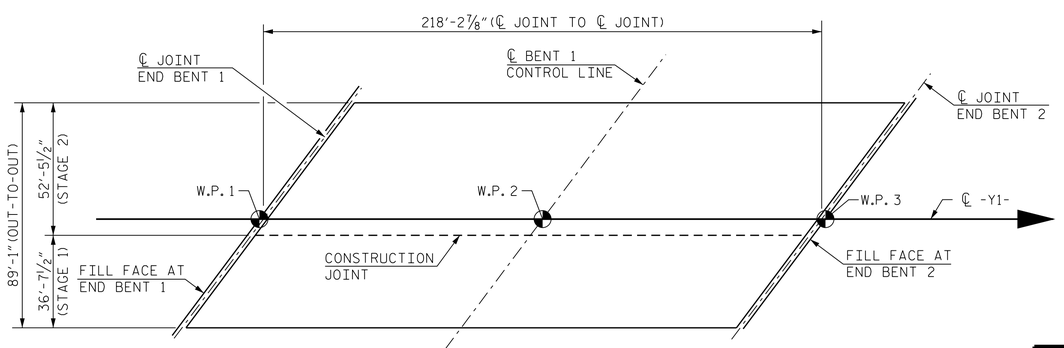

LAYOUT FOR COMPUTING AREA REINFORCED CONCRETE DECK SLAB

STAGE 1 = 7,993 SQ. FT.

STAGE 2 = 11,448 SQ. FT.

TOTAL = 19,441 SQ. FT.

GROOVING BRIDGE FLOORS (STAGE 2)		
APPROACH SLABS	2,352	SQ.FT.
BRIDGE DECK	10,605	SQ.FT.
TOTAL	12,957	SQ.FT.

NOTE: INCLUDES CLOSURE POUR

REINFORCING BAR SCHEDULE - STAGE 2

BAR	NO.	SIZE	TYPE	LENGTH	WEIGHT	BAR	NO.	SIZE	TYPE	LENGTH	WEIGHT
✳ A3	339	5	STR.	45'-8"	16,147	A423	4	5	STR.	12'-7"	52
A4	339	5	STR.	45'-8"	16,147	A424	4	5	STR.	11'-2"	47
✳ A5	394	5	STR.	6'-1"	2,500	A425	4	5	STR.	9'-9"	41
A6	394	5	STR.	6'-1"	2,500	A426	4	5	STR.	8'-3"	34
						A427	4	5	STR.	6'-10"	29
✳ A301	4	5	STR.	44'-5"	185	A428	4	5	STR.	5'-5"	23
✳ A302	4	5	STR.	43'-0"	179	A429	4	5	STR.	3'-11"	16
✳ A303	4	5	STR.	41'-7"	173	A430	4	5	STR.	2'-6"	10
✳ A304	4	5	STR.	40'-1"	167	A431	3	6	STR.	6'-8"	30
✳ A305	4	5	STR.	38'-8"	161						
✳ A306	4	5	STR.	37'-3"	155	✳ B1	184	4	STR.	37'-3"	4,578
✳ A307	4	5	STR.	35'-9"	149	✳ B2	46	6	STR.	50'-0"	3,455
✳ A308	4	5	STR.	34'-4"	143	✳ B3	46	6	STR.	29'-10"	2,061
✳ A309	4	5	STR.	32'-10"	137	✳ B4	44	6	STR.	34'-0"	2,247
✳ A310	4	5	STR.	31'-5"	131	B5	228	5	STR.	55'-11"	13,297
✳ A311	4	5	STR.	30'-0"	125						
✳ A312	4	5	STR.	28'-6"	119	✳ D1	405	5	STR.	5'-3"	2,218
✳ A313	4	5	STR.	27'-1"	113	D2	405	5	STR.	5'-3"	2,218
✳ A314	4	5	STR.	25'-8"	107						
✳ A315	4	5	STR.	24'-2"	101	✳ G2	2	5	STR.	57'-6"	120
✳ A316	4	5	STR.	22'-9"	95						
✳ A317	4	5	STR.	21'-4"	89	✳ K11	4	8	1	14'-1"	150
✳ A318	4	5	STR.	19'-10"	83	✳ K12	16	8	2	19'-9"	844
✳ A319	4	5	STR.	18'-5"	77	✳ K13	4	8	1	9'-7"	102
✳ A320	4	5	STR.	17'-0"	71	✳ K14	30	6	STR.	8'-1"	364
✳ A321	4	5	STR.	15'-6"	65	K15	10	4	6	6'-9"	45
✳ A322	4	5	STR.	14'-1"	59	K16	20	4	7	13'-4"	178
✳ A323	4	5	STR.	12'-7"	52	K17	10	4	STR.	6'-10"	46
✳ A324	4	5	STR.	11'-2"	47	K18	20	4	STR.	9'-5"	126
✳ A325	4	5	STR.	9'-9"	41	K19	20	4	STR.	8'-2"	109
✳ A326	4	5	STR.	8'-3"	34						
✳ A327	4	5	STR.	6'-10"	29	✳ S1	80	4	4	4'-2"	223
✳ A328	4	5	STR.	5'-5"	23	✳ S2	80	5	3	6'-2"	515
✳ A329	4	5	STR.	3'-11"	16	S3	130	4	8	3'-6"	304
✳ A330	4	5	STR.	2'-6"	10						
✳ A331	3	6	STR.	7'-1"	32	U1	10	4	5	11'-9"	78
						U2	25	4	5	13'-9"	230
A401	4	5	STR.	44'-5"	185						
A402	4	5	STR.	43'-0"	179						
A403	4	5	STR.	41'-7"	173						
A404	4	5	STR.	40'-1"	167						
A405	4	5	STR.	38'-8"	161						
A406	4	5	STR.	37'-3"	155						
A407	4	5	STR.	35'-9"	149						
A408	4	5	STR.	34'-4"	143						
A409	4	5	STR.	32'-10"	137						
A410	4	5	STR.	31'-5"	131						
A411	4	5	STR.	30'-0"	125						
A412	4	5	STR.	28'-6"	119						
A413	4	5	STR.	27'-1"	113						
A414	4	5	STR.	25'-8"	107						
A415	4	5	STR.	24'-2"	101						
A416	4	5	STR.	22'-9"	95						
A417	4	5	STR.	21'-4"	89						
A418	4	5	STR.	19'-10"	83						
A419	4	5	STR.	18'-5"	77						
A420	4	5	STR.	17'-0"	71						
A421	4	5	STR.	15'-6"	65						
A422	4	5	STR.	14'-1"	59						

REINFORCING STEEL	38,244 LBS.
✳ EPOXY COATED REINFORCING STEEL	38,492 LBS.

BAR TYPES

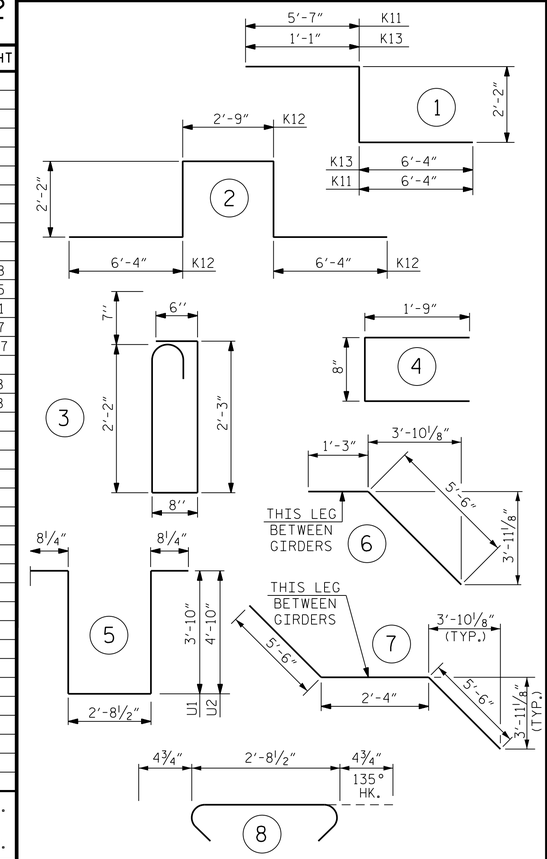

ALL BAR DIMENSIONS ARE OUT TO OUT

SUPERSTRUCTURE BILL OF MATERIAL

	CLASS AA CONCRETE	REINFORCING STEEL	EPOXY COATED REINFORCING STEEL
	(CU. YDS.)	(LBS.)	(LBS.)
POUR 4	133.5		
POUR 5	177.4		
POUR 6 (CLOSURE POUR)	42.0		
TOTALS✳✳	352.9	38,244	38,492

✳✳QUANTITIES FOR CONCRETE PARAPET ARE NOT INCLUDED

SUPERSTRUCTURE REINFORCING STEEL LENGTHS ARE BASED ON THE FOLLOWING MINIMUM SPLICE LENGTHS					
BAR SIZE	SUPERSTRUCTURE EXCEPT APPROACH SLABS, PARAPETS, AND BARRIER RAILS		APPROACH SLABS		PARAPETS AND BARRIER RAILS
	EPOXY COATED	UNCOATED	EPOXY COATED	UNCOATED	EPOXY COATED
#4	1'-11"	1'-7"	1'-11"	1'-7"	2'-6"
#5	2'-5"	2'-0"	2'-5"	2'-0"	3'-1"
#6	2'-10"	2'-5"	3'-7"	2'-5"	3'-8"
#7	4'-2"	2'-9"			
#8	4'-9"	3'-2"			

PROJECT NO. I-5972

JOHNSTON COUNTY

STATION: 36+93.50 -Y1-

SHEET 2 OF 2

STATE OF NORTH CAROLINA
DEPARTMENT OF TRANSPORTATION
RALEIGH

SUPERSTRUCTURE
BILL OF
MATERIAL
STAGE 2

RK&K
P: (919) 878-9560
8601 Six Forks Road, Forum 1 Suite 700
Raleigh, North Carolina 27615 | NC License No. F-0112
Engineers | Construction Managers | Planners | Scientists
www.rkk.com
Responsive People | Creative Solutions

NORTH CAROLINA PROFESSIONAL SEAL 15825 ENGINEER BRUCE D. KLAPPENBACH
9/13/2023

DOCUMENT NOT CONSIDERED FINAL UNLESS ALL SIGNATURES COMPLETED

REVISIONS							
NO.	BY:	DATE:	NO.	BY:	DATE:	SHEET NO.	S-34
1			3			TOTAL SHEETS	54
2			4				

DRAWN BY : B. A. HAAG DATE : JUN 2021
CHECKED BY : B. D. KLAPPENBACH DATE : JUN 2021
DESIGN ENGINEER OF RECORD : B. D. KLAPPENBACH DATE : JUN 2021

bklappenbach
9/13/2023 R:\Structures\DGN\BR_500066\Final\I5972_SMU_BM2_500066.dgn