DocuSign Envelope ID: B437460B-F00D-4A40-A154-D71A4FEB37FC

PROJECT REFERENCE NO.	SHEET NO.
R-3833C	2C-09

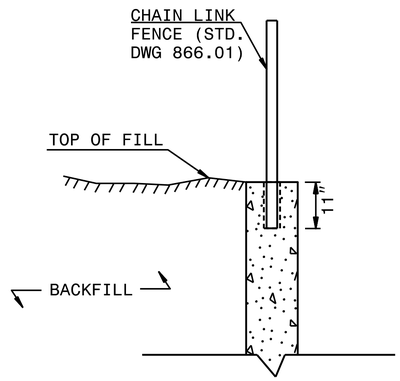

SECTION A-A
RETAINING WALL

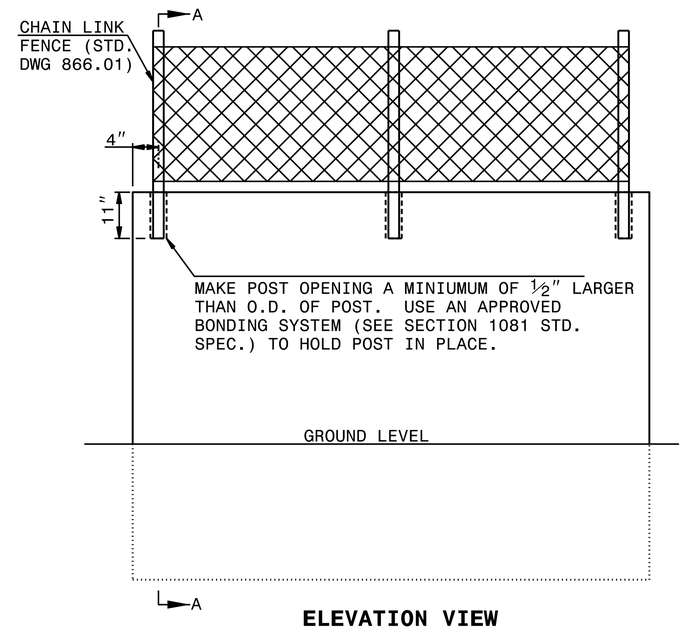

ELEVATION VIEW
OF RETAINING WALL

EMBED CHAIN LINK FENCE 11″ INTO PROPOSED WALL IN A SLEEVE OR BLOCKOUT WITH EPOXY OR CONCRETE GROUT ANCHORING SYSTEM. PRE-MEASURE AND CENTER THE PROPOSED FENCE ON TOP OF WALL FOR POST SPACINGS. IFF DRILLING THE HOLES FOR POSTS, USE A ROTARY DRILL TO DRILL HOLES IN THE CONCRETE. NO IMPACT DRILLS WILL BE ALLOWED, TO ELIMINATE ANY POSSIBILITY OF STRUCTURAL DAMAGES TO THE PROPOSED WALL.

DocuSigned by: Nicole M. Hackler 5884323D...
NORTH CAROLINA PROFESSIONAL SEAL 33144 ENGINEER NICOLE M. HACKLER
4/27/2023

DOCUMENT NOT CONSIDERED FINAL UNLESS ALL SIGNATURES COMPLETED

CONTRACT STANDARDS AND DEVELOPMENT UNIT
Office 919-707-6950 FAX 919-250-4119

CHAIN LINK FENCE ON RETAINING WALL

ORIGINAL BY: _____ DATE: _____
MODIFIED BY: K.A. KEMPF DATE: SEP. 2017
CHECKED BY: _____ DATE: _____
FILE SPEC.: usr/detials/jhowerton/chain link on retaining wall.dgn

$$$$$$SYSTIME$$$$$$
$$$$$$$$$$$$$$$$$$$$DGN$$$$$$$$$$$$$$$$$$$$
$$$$USERNAME$$$$