DocuSign Envelope ID: FC8E86D7-D86A-4F53-BAFD-EC04BB140CC0

Prepared in the Office of:

AECOM

5438 WADE PARK BOULEVARD, SUITE 200, RALEIGH, NC 27607
919-461-1100
F - 0342

PROJECT REFERENCE NO.	SHEET NO.
U-5824	UC-3B
DESIGNED BY: FR	
DRAWN BY: FR/RR	
CHECKED BY: SS	
APPROVED BY: JT	
REVISED:	
NORTH CAROLINA DEPARTMENT OF TRANSPORTATION	
UTILITIES ENGINEERING SEC. PHONE:(919)707-6690 FAX:(919)250-4151	10/4/2023 12:06 PM EDT UTILITY CONSTRUCTION PLANS ONLY

DOCUMENT NOT CONSIDERED FINAL UNLESS ALL SIGNATURES COMPLETED

NORTH CAROLINA PROFESSIONAL SEAL 042895 ENGINEER JOSEPH C. TUNNER

DocuSigned by: Joseph Tunner 4E8B3017F2F2E427...

UTILITY CONSTRUCTION

Hydrant and Valve Installation

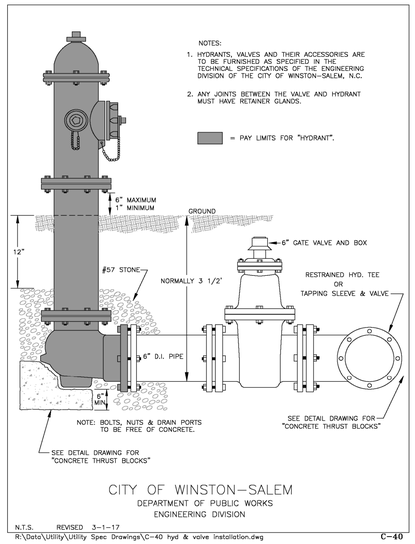

Valve Box Installation

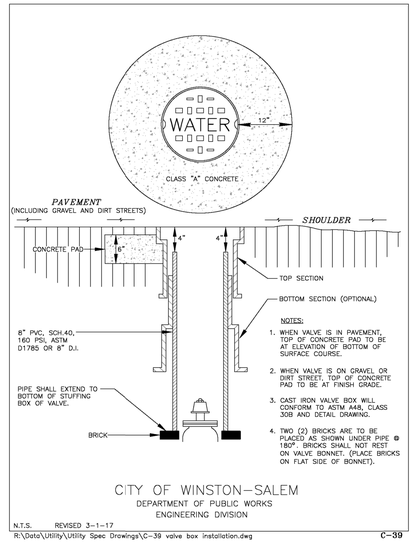

Cast Iron Valve Box

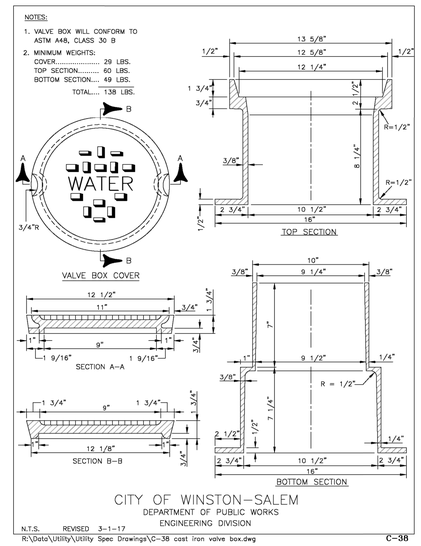

Concrete Thrust Blocks for Horizontal Bends

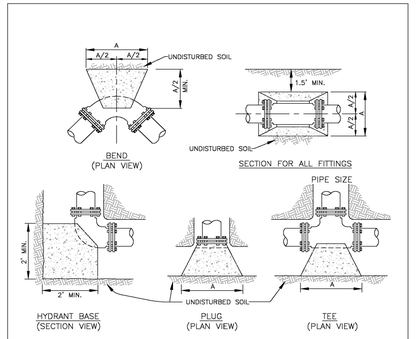

FITTING	MINIMUM "A" DIMENSION (FEET)								
	PIPE SIZE (INCHES)								
	2	4	6	8	12	16	20	24	30	36
90° BEND	1.0	2.0	2.5	3.5	5.0	6.5	8.0	10.0	12.0	14.5
45° BEND	1.0	1.5	2.0	2.5	4.0	5.0	6.0	7.0	9.0	10.5
22 1/2° BEND	0.5	1.0	1.5	2.0	3.0	3.5	4.5	5.0	6.5	7.5
11 1/4° BEND	0.5	1.0	1.0	1.5	2.0	2.5	3.0	4.0	4.5	5.5
PLUG/TEE	1.0	1.5	2.5	3.0	4.5	5.5	7.0	8.0	10.0	12.0

NOTE: ABOVE DIMENSIONS BASED ON THE FOLLOWING: 250 PSI WATER PRESSURE AND 2000 LB/SQ FT SOIL BEARING CAPACITY (SOFT CLAY)

CITY OF WINSTON-SALEM
DEPARTMENT OF PUBLIC WORKS
ENGINEERING DIVISION
N.T.S. REVISED 3-1-17
R:\Data\Utility\Utility Spec Drawings\C-44 concrete thrust block horizontal.dwg
C-44

Concrete Thrust Blocks w/ Anchors for Top Vertical Bends

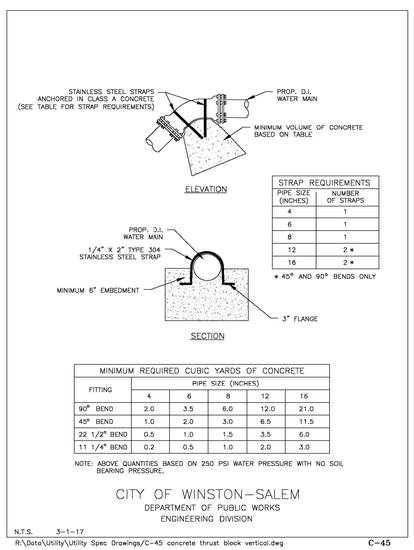

STRAP REQUIREMENTS	
PIPE SIZE (INCHES)	NUMBER OF STRAPS
4	1
6	1
8	1
12	2 *
16	2 *

* 45° AND 90° BENDS ONLY

MINIMUM REQUIRED CUBIC YARDS OF CONCRETE					
FITTING	PIPE SIZE (INCHES)				
	4	6	8	12	16
90° BEND	2.0	3.5	6.0	12.0	21.0
45° BEND	1.0	2.0	3.0	6.5	11.5
22 1/2° BEND	0.5	1.0	1.5	3.5	6.0
11 1/4° BEND	0.2	0.5	1.0	2.0	3.0

NOTE: ABOVE QUANTITIES BASED ON 250 PSI WATER PRESSURE WITH NO SOIL BEARING PRESSURE.

Cast Iron Meter Box for 5/8" and 1" Meters

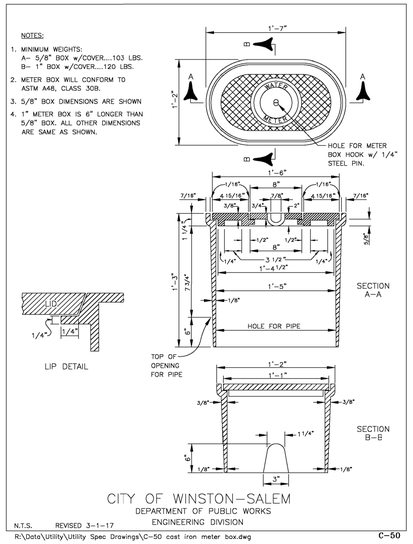

Polymer Concrete Meter Box for 1 1/2" and 2" Meters

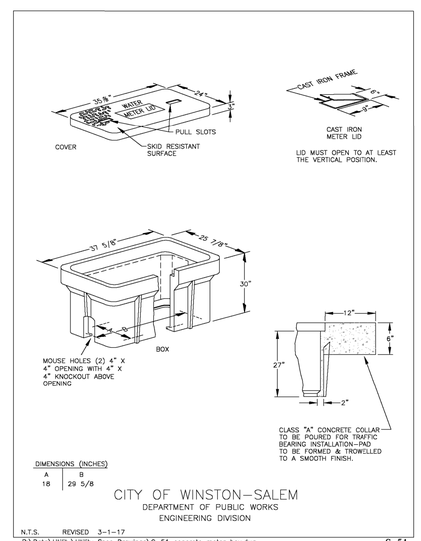

DIMENSIONS (INCHES)	
A	B
18	29 5/8

DATE: 9/8/2023
TIME: 1:24:04 PM
DGN: L:\Secure_DCS\Proj\etts\60580005_NCDOTNSUTL\900_CAD\TO_GIS\90_CAD\TO_NCDOT_TIP\Utilities\Engineering\UC\Proj\U5824_uc_ash_3B_AGREEMENT.dgn