DocuSign Envelope ID: A317EB1A-CE31-4D92-AFEC-848BC8D2B79F

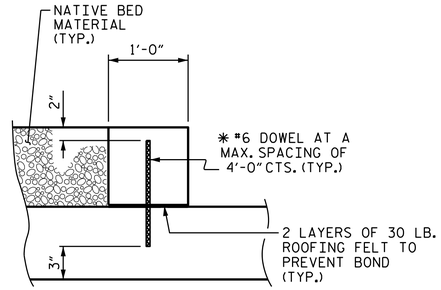

SECTION THROUGH SILL/BAFFLE

✱ DOWELS MAY BE PUSHED INTO GREEN CONCRETE AFTER SLAB HAS BEEN FLOAT FINISHED.

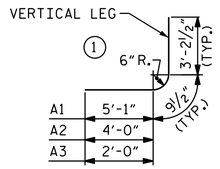

BAR TYPES

BAR DIMENSIONS ARE OUT TO OUT

MIN. SPLICE LENGTHS CHART

BAR	SIZE	SPLICE LENGTH
A1	#8	4'-9"
A2	#8	3'-8"
A3	#4	1'-10"
C1, C2	#4	2'-5"
S1, S2	#8	4'-9"

BILL OF MATERIAL (STAGE I)

(PHASE A)

BAR	NO.	SIZE	TYPE	LENGTH	WEIGHT
A1	129	#8	1	9'-1"	3,129
A2	129	#8	1	8'-0"	2,756
A3	194	#4	1	6'-0"	778
A100	224	#6	STR.	18'-1"	6,085
A101	8	#6	STR.	16'-3"	196
A102	8	#6	STR.	14'-2"	171
A103	8	#6	STR.	12'-0"	145
A104	8	#6	STR.	9'-10"	119
A105	8	#6	STR.	7'-8"	93
A106	8	#6	STR.	5'-7"	68
B1	97	#4	STR.	11'-8"	756
B2	129	#4	STR.	8'-4"	719
B3	194	#4	STR.	11'-8"	1,512
C1	104	#4	STR.	34'-10"	2,420
D1	3	#6	STR.	3'-1"	14
S1	9	#8	STR.	20'-9"	499

STAGE I (PHASE A) REINFORCING STEEL 19,460

(PHASE B)

BAR	NO.	SIZE	TYPE	LENGTH	WEIGHT
A1	129	#8	1	9'-1"	3,129
A2	129	#8	1	8'-0"	2,756
A200	236	#6	STR.	11'-5"	4,047
A201	4	#6	STR.	9'-3"	56
A202	4	#6	STR.	7'-2"	44
A203	4	#6	STR.	5'-0"	31
A204	2	#6	STR.	3'-11"	12
A205	4	#6	STR.	10'-2"	62
A206	4	#6	STR.	8'-1"	49
A207	4	#6	STR.	5'-11"	36
A208	4	#6	STR.	3'-9"	23
A500	210	#6	STR.	25'-11"	8,175
A501	8	#6	STR.	24'-0"	289
A502	8	#6	STR.	21'-10"	263
A503	8	#6	STR.	19'-8"	237
A504	8	#6	STR.	17'-6"	211
A505	8	#6	STR.	15'-5"	186
A506	8	#6	STR.	13'-3"	160
A507	8	#6	STR.	11'-1"	134
A508	8	#6	STR.	8'-11"	108
A509	8	#6	STR.	6'-10"	83
A510	8	#6	STR.	4'-8"	57
B1	97	#4	STR.	11'-8"	756
B2	129	#4	STR.	8'-4"	719
C1	138	#4	STR.	34'-10"	3,212
D2	3	#6	STR.	2'-1"	10
G1	4	#5	STR.	28'-7"	120
S2	9	#8	STR.	12'-7"	303
S3	9	#8	STR.	28'-7"	687

STAGE I (PHASE B) REINFORCING STEEL LBS. 25,955

BILL OF MATERIAL (STAGE II)

(PHASE C)

BAR	NO.	SIZE	TYPE	LENGTH	WEIGHT
A1	201	#8	1	9'-1"	4,875
A2	201	#8	1	8'-0"	4,294
A3	302	#4	1	6'-0"	1,211
A300	370	#6	STR.	18'-1"	10,050
A301	8	#6	STR.	15'-11"	192
A302	8	#6	STR.	13'-9"	166
A303	8	#6	STR.	11'-8"	141
A304	8	#6	STR.	9'-6"	115
A305	8	#6	STR.	7'-4"	89
A306	8	#6	STR.	5'-2"	63
B1	151	#4	STR.	11'-8"	1,177
B2	202	#4	STR.	8'-4"	1,125
B3	302	#4	STR.	11'-8"	2,354
C2	156	#4	STR.	35'-3"	3,674
D1	6	#6	STR.	3'-1"	28
E1	16	#5	STR.	5'-1"	85
S1	9	#8	STR.	20'-9"	499

STAGE II (PHASE C) REINFORCING STEEL LBS. 30,138

(PHASE D)

BAR	NO.	SIZE	TYPE	LENGTH	WEIGHT
A1	201	#8	1	9'-1"	4,875
A2	201	#8	1	8'-0"	4,294
A400	380	#6	STR.	11'-5"	6,517
A401	4	#6	STR.	10'-0"	61
A402	4	#6	STR.	7'-10"	48
A403	4	#6	STR.	5'-9"	35
A404	4	#6	STR.	3'-7"	22
A405	4	#6	STR.	9'-10"	60
A406	4	#6	STR.	7'-8"	47
A407	4	#6	STR.	5'-7"	34
A408	4	#6	STR.	3'-5"	21
A500	354	#6	STR.	25'-11"	13,781
A511	8	#6	STR.	24'-2"	146
A512	8	#6	STR.	22'-0"	133
A513	8	#6	STR.	19'-10"	120
A514	8	#6	STR.	17'-8"	107
A515	8	#6	STR.	15'-7"	94
A516	8	#6	STR.	13'-5"	81
A517	8	#6	STR.	11'-3"	68
A518	8	#6	STR.	9'-2"	56
A519	8	#6	STR.	7'-0"	43
A520	8	#6	STR.	4'-10"	30
B1	151	#4	STR.	11'-8"	1,177
B2	202	#4	STR.	8'-4"	1,125
C2	207	#4	STR.	35'-3"	4,875
D2	6	#6	STR.	2'-1"	19
G1	4	#5	STR.	28'-7"	120
S2	9	#8	STR.	12'-7"	303
S3	9	#8	STR.	28'-7"	687

STAGE II (PHASE D) REINFORCING STEEL LBS. 39,850

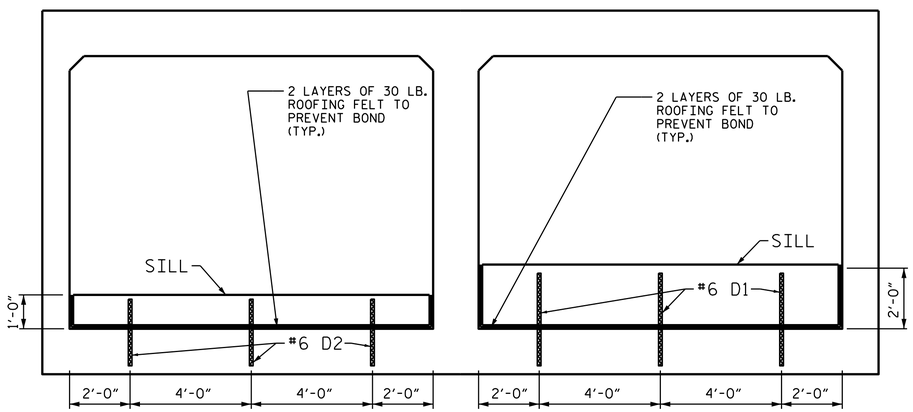

SILL/BAFFLE DETAIL

(LOOKING DOWNSTREAM)

NOTES:

NATIVE MATERIAL CONSISTS OF MATERIAL THAT IS EXCAVATED FROM THE STREAM BED OR FLOODPLAIN AT THE PROJECT SITE DURING CULVERT CONSTRUCTION. RIP-RAP MAY BE USED TO SUPPLEMENT THE NATIVE MATERIAL IN THE HIGH FLOW CULVERT BARREL. IF RIP-RAP IS USED TO LINE THE HIGH FLOW BARREL, NATIVE MATERIAL SHOULD BE PLACED ON TOP TO FILL VOIDS AND PROVIDE A FLAT SURFACE FOR ANIMAL PASSAGE. NATIVE MATERIAL IS SUBJECT TO APPROVAL BY THE ENGINEER AND MAY BE SUBJECT TO PERMIT CONDITIONS.

CULVERT SILL/BAFFLE DETAILS

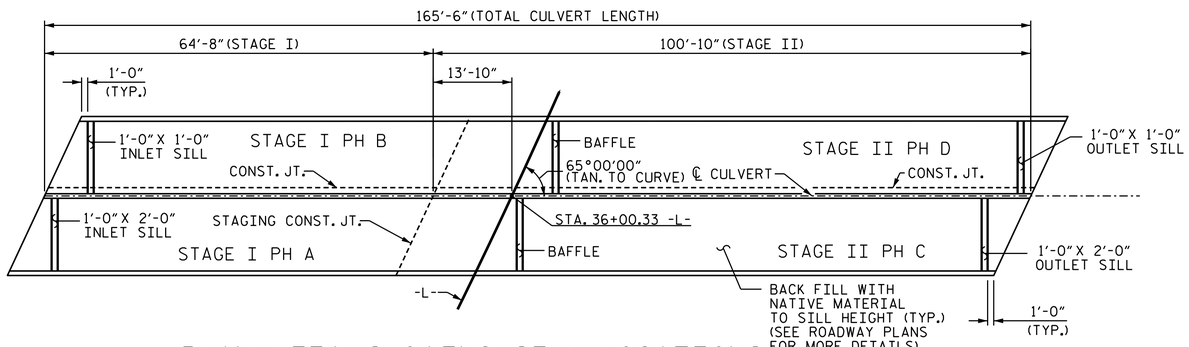

PLAN VIEW SHOWING SILL LOCATIONS

PROJECT NO. R-3833C

IREDELL COUNTY

STATION: 36+00.33 -L-

DRAWN BY : V. T. THOMPSON DATE : 08/15/19

CHECKED BY : M. B. ISENHOUR DATE : 02/06/20

DESIGN ENGINEER OF RECORD: M. B. ISENHOUR DATE : 05/04/23

Stantec
Stantec Consulting Services Inc.
801 Jones Franklin Road
Suite 300
Raleigh, NC 27606
Tel. (919) 851-6866
Fax. (919) 851-7024
www.stantec.com
License No. F-0672

NORTH CAROLINA PROFESSIONAL SEAL 49756 ENGINEER MALINDA S. ISENHOUR

DocuSigned by: Malinda Isenhour A7A9B6E53FB430... 5/4/2023

DOCUMENT NOT CONSIDERED FINAL UNLESS ALL SIGNATURES COMPLETED

STATE OF NORTH CAROLINA
DEPARTMENT OF TRANSPORTATION
RALEIGH

DOUBLE 12 FT. X 9 FT. CONCRETE BOX CULVERT

65°00'00" SKEW

REVISIONS						
NO.	BY:	DATE:	NO.	BY:	DATE:	
1			3			
2			4			

SHEET NO. C- 14

TOTAL SHEETS 16

U:\Structures\Culvert\Drafting\R3833C_SMU_CU_014.dgn 5/4/2023 4:12:05 PM jgelie