DocuSign Envelope ID: B437460B-F00D-4A40-A154-D71A4FEB37FC

PROJECT REFERENCE NO.	SHEET NO.
R-3833C	2D-4

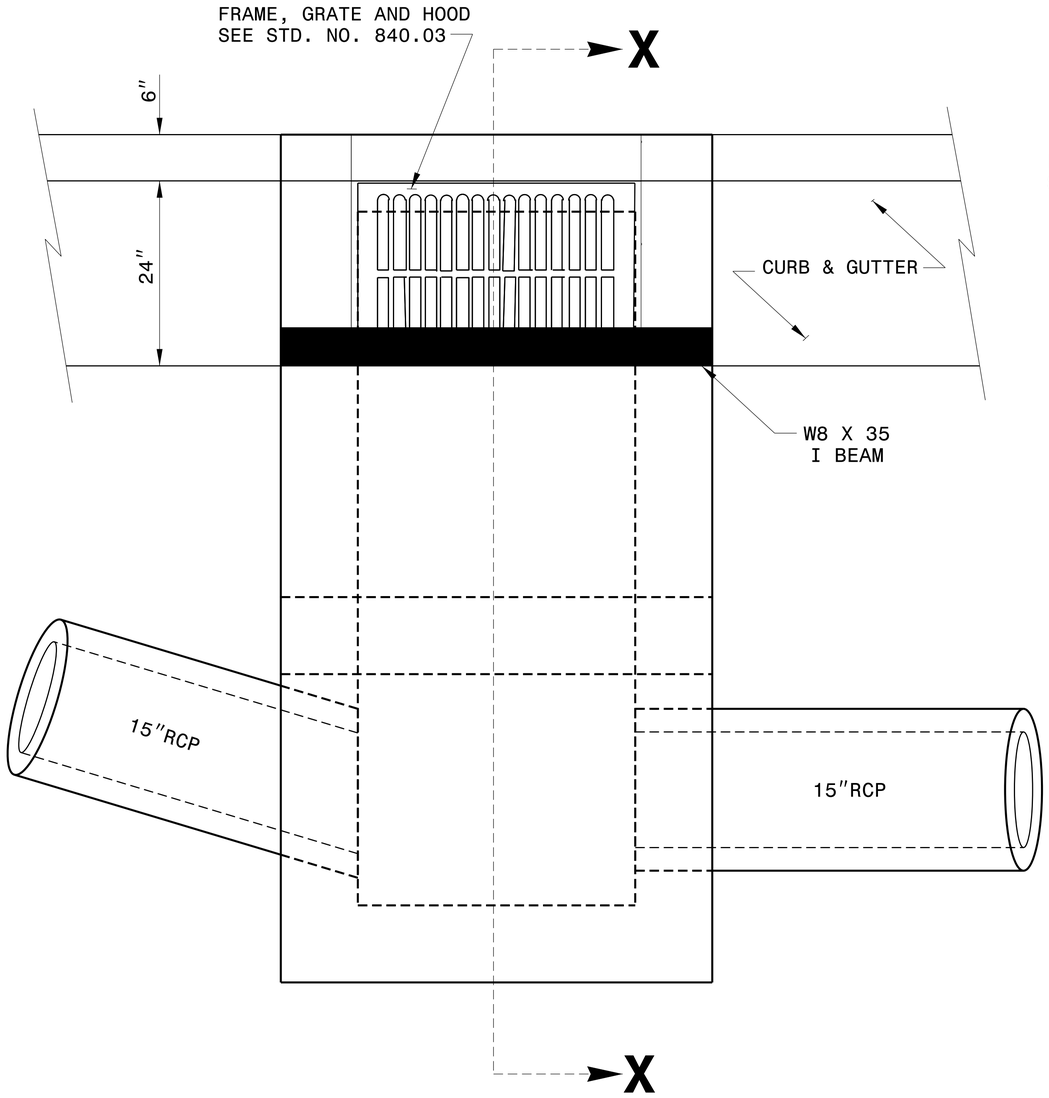

PLAN

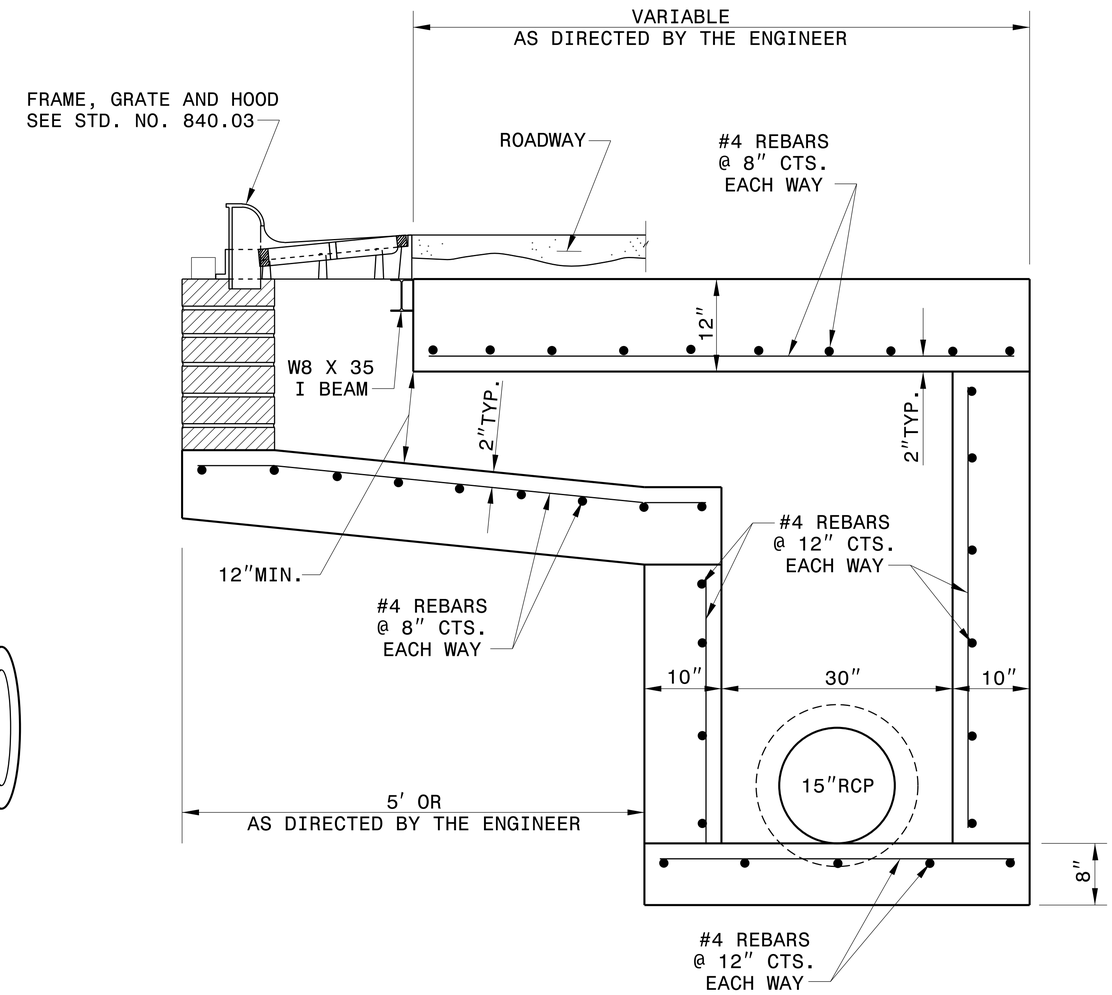

SECTION X-X

NOTES:

MORTAR JOINTS ½" TO ¼" THICK.

USE CLASS "B" CONCRETE THROUGHOUT.

USE TYPE "E", "F" AND "G" GRATES UNLESS OTHERWISE INDICATED.

USE BRICK OR CONCRETE BLOCK WHICH COMPLIES WITH THE REQUIREMENTS OF SECTION 840 OF THE STANDARD SPECIFICATIONS.

CHAMFER ALL EXPOSED CORNERS 1".

DocuSigned by: Nicole M. Britt
5684320D3B4F4A0...
4/27/2023

NORTH CAROLINA PROFESSIONAL SEAL ENGINEER 33144 NICOLE M. BRITT

CONTRACT STANDARDS AND DEVELOPMENT UNIT
Office 919-707-6950 FAX 919-250-4119

PROPOSED OFFSET CATCH BASIN

ORIGINAL BY: _____ DATE: _____
MODIFIED BY: rnbritt DATE: 10-30-2012
CHECKED BY: _____ DATE: _____
FILE SPEC.: nbritt/english/hydro/840d06.dgn

$$$$$SYSTIME$$$$$
$$$$$