DocuSign Envelope ID: B437460B-F00D-4A40-A154-D71A4FEB37FC

PROJECT REFERENCE NO.	SHEET NO.
R-3833C	2D-3

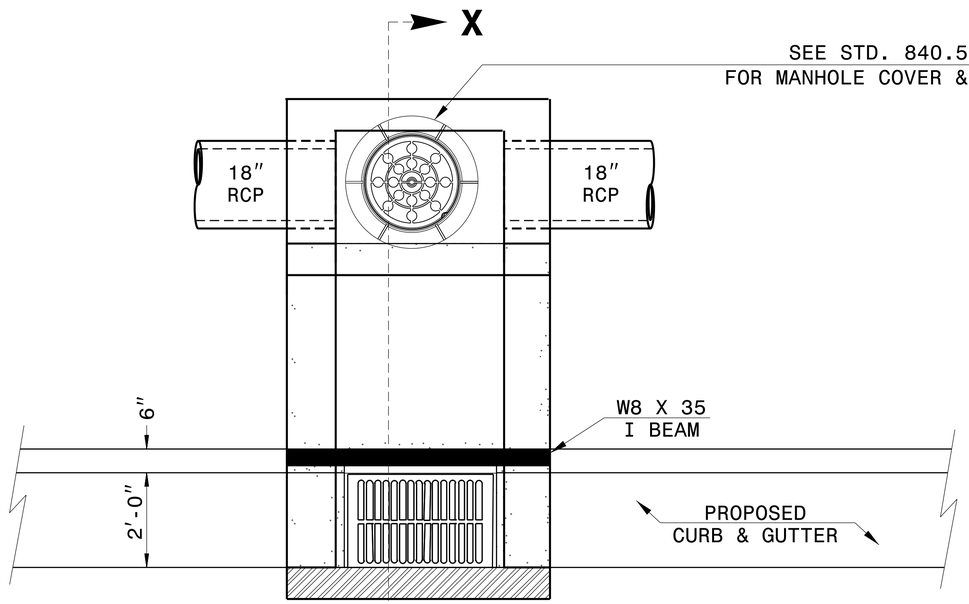

PLAN

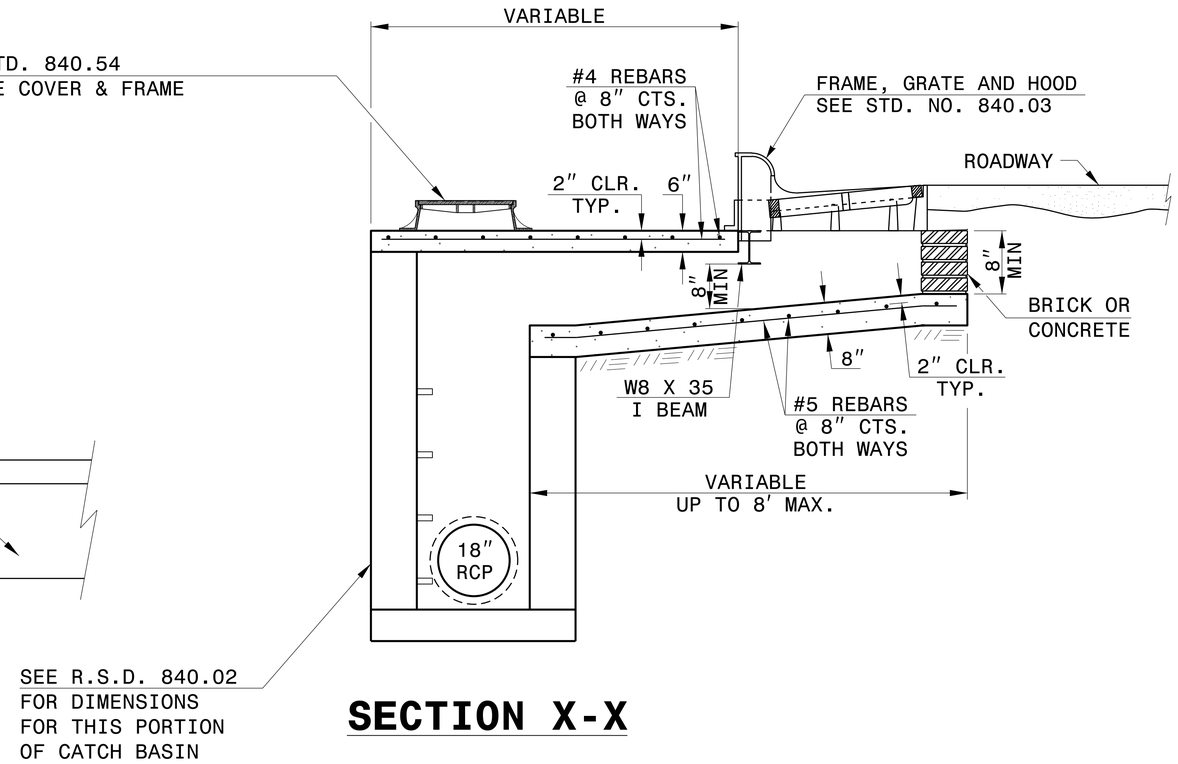

SECTION X-X

NOTES:

MORTAR JOINTS ½″ TO ¼″ THICK.

USE CLASS "B" CONCRETE THROUGHOUT.

USE TYPE "E", "F" AND "G" GRATES UNLESS OTHERWISE INDICATED.

USE BRICK OR CONCRETE BLOCK WHICH COMPLIES WITH THE REQUIREMENTS OF SECTION 840 OF THE STANDARD SPECIFICATIONS.

CHAMFER ALL EXPOSED CORNERS 1″.

DRAWING NOT TO SCALE.

PROVIDE ALL CATCH BASINS OVER 3′-6″ IN DEPTH WITH STEPS 12″ ON CENTER. USE STEPS WHICH COMPLY WITH STD. DRAWING 840.66

DocuSign Envelope ID: 5884323D-
Nicole Britt
NORTH CAROLINA PROFESSIONAL SEAL 33144 ENGINEER
4/27/2023

CONTRACT STANDARDS AND DEVELOPMENT UNIT
Office 919-707-6950 FAX 919-250-4119

PROPOSED OFFSET CATCH BASIN

ORIGINAL BY: _____ DATE: _____
MODIFIED BY: K. KEMPF DATE: 2/22/13
CHECKED BY: _____ DATE: _____
FILE SPEC.: nbritt/english/hydro/840d06 offset boxes.dgn

$$$$SYSTIME$$$$
$$$$TIME$$$$
$$$$DGNFILE$$$$
$$$$USERNAME$$$$