DocuSign Envelope ID: 7C7DA593-22BB-4AE2-ABBE-256F7A776D01

8/17/99

INTERSECTION DETAIL

PROJECT REFERENCE NO.	SHEET NO.
R-5799	2B-1

ROADWAY DESIGN ENGINEER

NORTH CAROLINA PROFESSIONAL SEAL 042357 ENGINEER ALLISON C. DRAKE

DocuSigned by: Allison Drake 7F8B4A2C3B4A3D...

6/15/2023

DOCUMENT NOT CONSIDERED FINAL UNLESS ALL SIGNATURES COMPLETED

RS&H
1520 SOUTH BOULEVARD, SUITE 200
CHARLOTTE, NC 28203
NC FIRM LICENSE No: F-0493

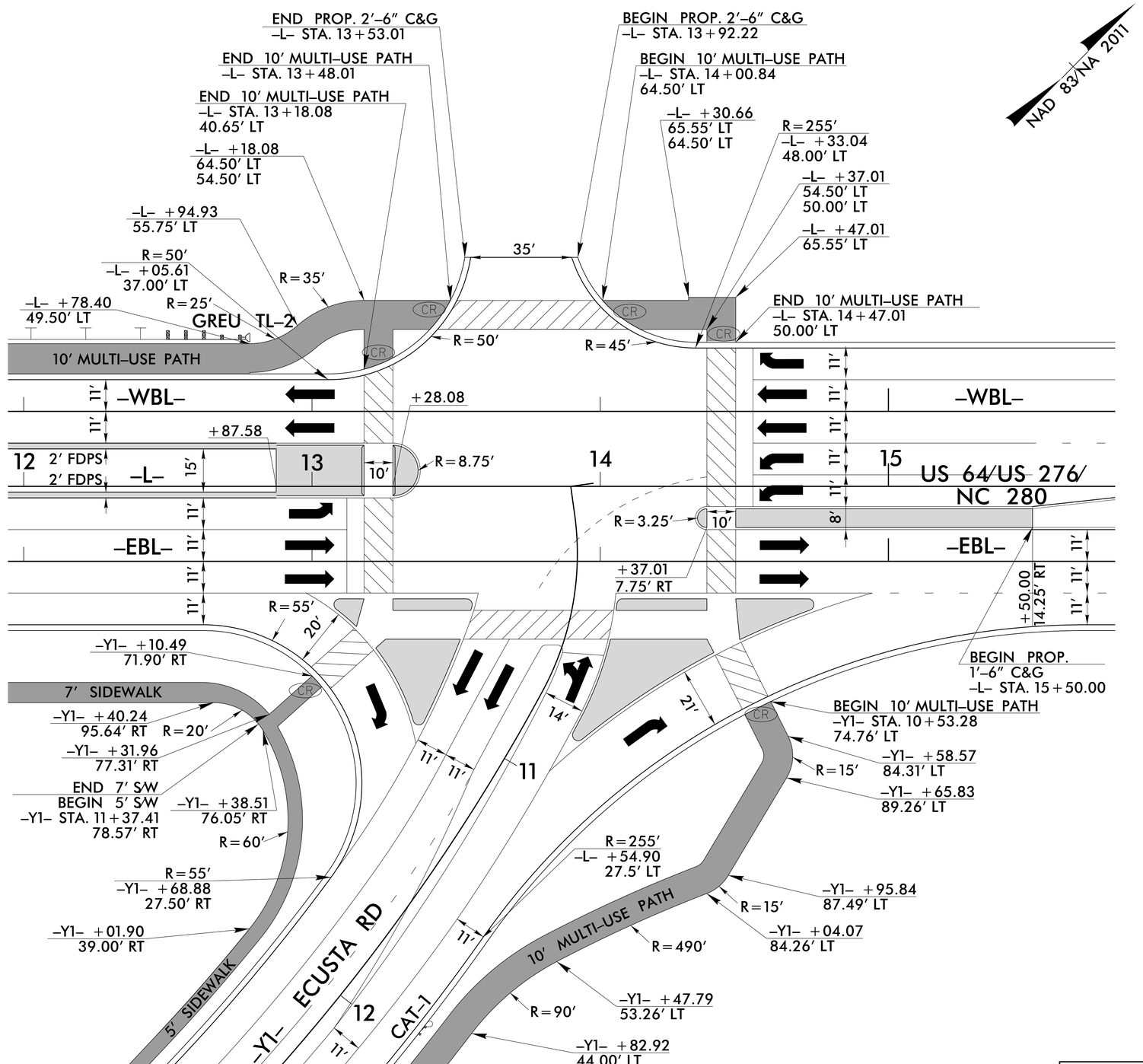

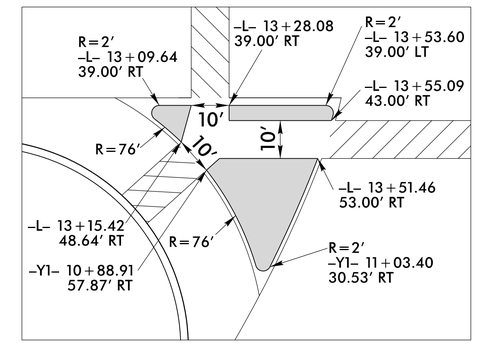

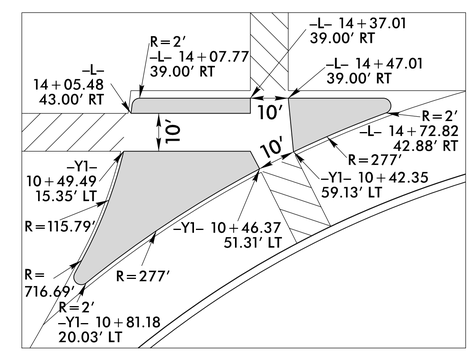

PROP. SIDEWALK & MULTI-USE PATH

PROP. MONO. ISLAND

(CR) PROP. CURB RAMPS

GRAPHIC SCALE
20 10 0 20 40
PLANS

LOCATION: ECUSTA RD. AND US 276/NC 280 INTERSECTION	
TIP NO.: R-5799	COUNTY: TRANSYLVANIA
DESIGNED BY: D. MORROW, PE	
CHECKED BY: A. DRAKE, PE	DATE: 8/18/2020

05-MAY-2023 17:07
R:\Roadway\Proj\R5799_Rdy_Trad_Intersection_detail.dgn
$$$$USERNAME$$$$