DocuSign Envelope ID: 924BD122-09C8-4F4E-A79D-54B7946F9BAA

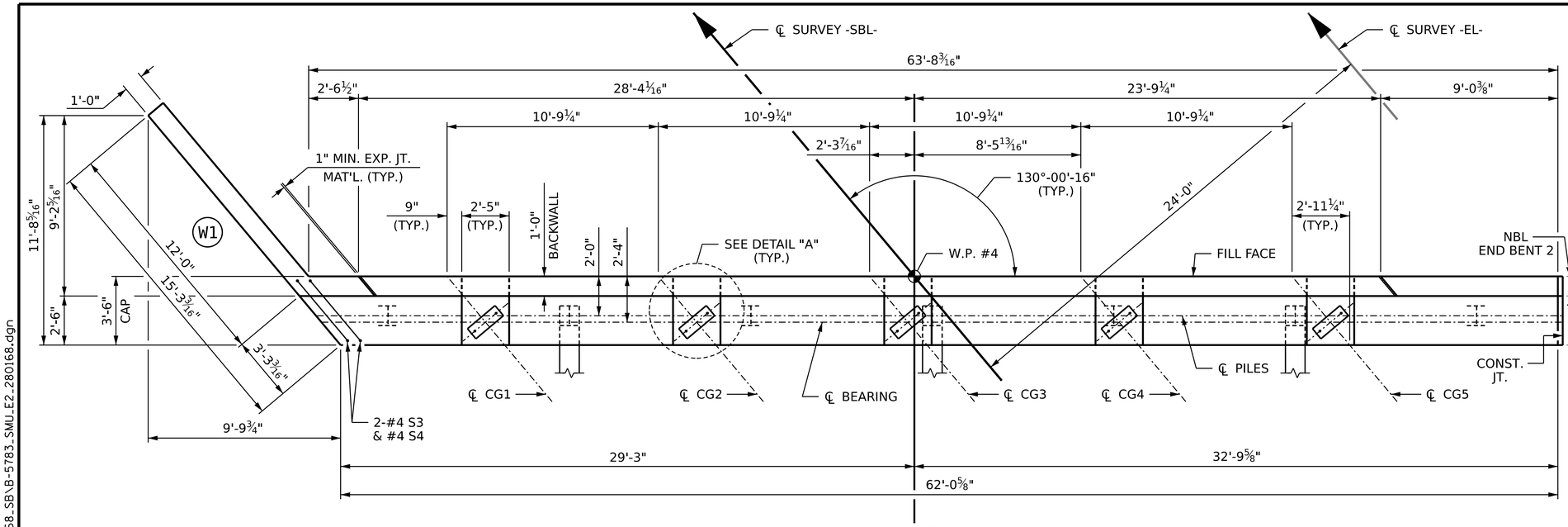

PLAN

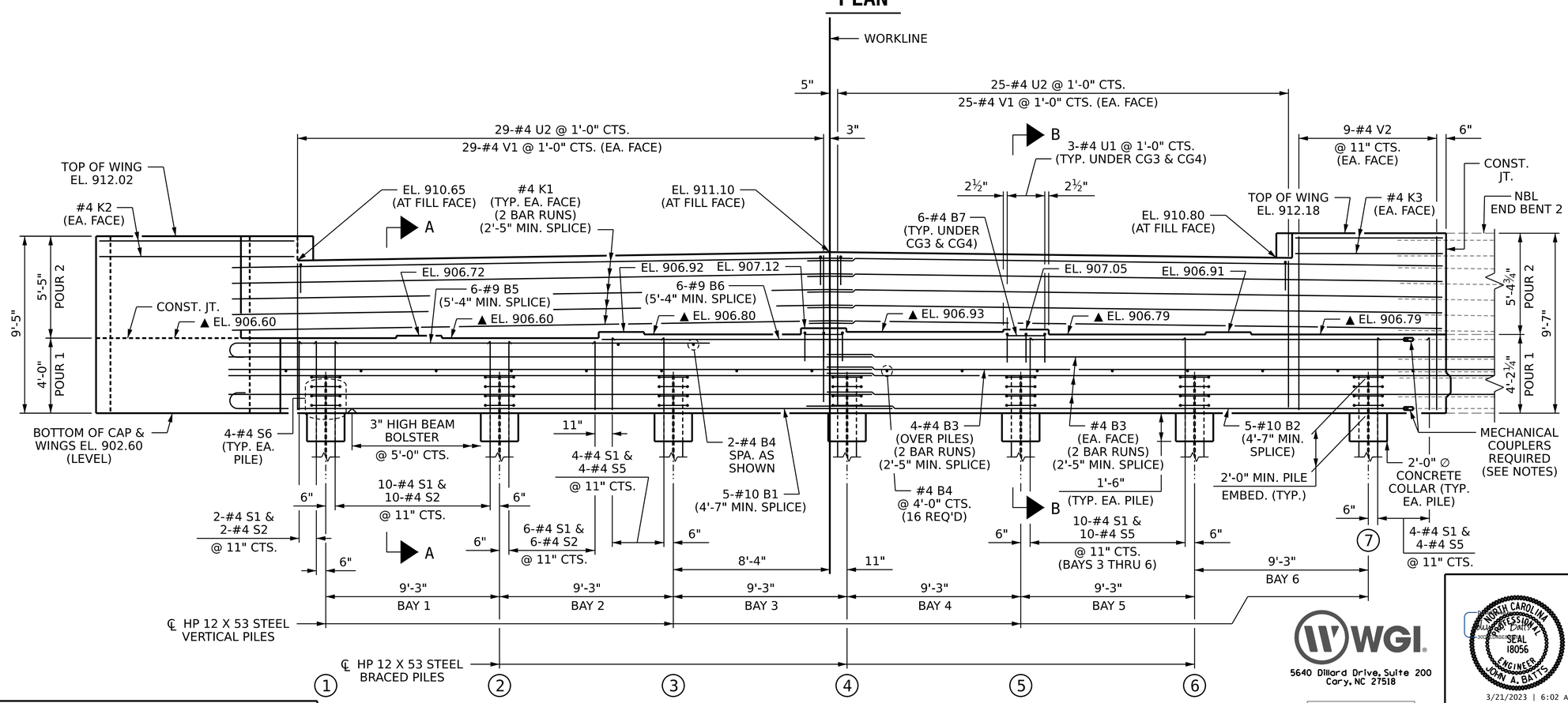

ELEVATION

NOTES:

STIRRUPS AND "U" BARS IN CAP MAY BE SHIFTED AS NECESSARY TO CLEAR ANCHOR BOLTS.

BACKWALL SHALL BE PLACED BEFORE APPLYING THE EPOXY PROTECTIVE COATING.

THE TOP SURFACE AREAS OF THE END BENT CAPS SHALL BE CURED IN ACCORDANCE WITH THE STANDARD SPECIFICATIONS EXPECT THE MEMBRANE CURING COMPOUND METHOD SHALL NOT BE USED.

THE TOP SURFACE OF THE CAP EXCEPT THE BRIDGE SEAT BUILDUPS SHALL BE SLOPED TRANSVERSELY FROM THE FILL FACE TO THE BACK FACE AT THE RATE 2%.

SEE GENERAL DRAWING "FOUNDATION LAYOUT" FOR ADDITIONAL NOTES FOR DRIVING PILES.

▲ FOR LOCATION OF ELEVATIONS BETWEEN BRIDGE SEAT BUILDUPS, SEE SECTION A-A AND SECTION B-B ON SHEET 3 OF 3.

THE CONTRACTOR'S ATTENTION IS CALLED TO THE FACT THAT THE LENGTHS OF THE #9 AND THE #10 "B" BARS AT THE CONSTRUCTION JOINT MAY NEED TO BE ADJUSTED DUE TO THE TYPE OF MECHANICAL BUTT SPLICE CHOSEN BY THE CONTRACTOR. NO ADDITIONAL PAYMENT WILL BE MADE FOR ANY ADJUSTMENTS.

MECHANICAL COUPLERS SHALL BE USED TO JOIN THE #9 AND #10 "B" BARS FROM SBL END BENT 1 WITH THE #9 AND #10 "B" BARS IN NBL END BENT 1. THE LOCATIONS OF THE COUPLERS SHALL BE STAGGERED ON ALTERNATING BARS BY 1 FOOT AND SBL END BENT 1 BARS SHALL BE CUT ACCORDINGLY TO ALLOW A MINIMUM OF 1'-0" AND A MAXIMUM OF 2'-0" EXTENSION INTO NBL END BENT 1.

FOR MECHANICAL COUPLERS, SEE MECHANICAL BUTT SPLICE FOR REINFORCING STEEL IN STANDARD SPECIFICATIONS.

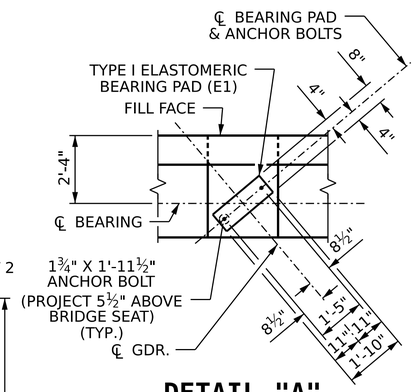

DETAIL "A"

(TYP. EA. GIRDER)

PROJECT NO. B-5783
DAVIDSON COUNTY
STATION: 21+53.61 -SBL-

SHEET 1 OF 3

STATE OF NORTH CAROLINA
DEPARTMENT OF TRANSPORTATION
RALEIGH
SUBSTRUCTURE

END BENT 2

WGI
5640 Dillard Drive, Suite 200
Cary, NC 27518
LICENSURE NO. C-4434

NORTH CAROLINA PROFESSIONAL SEAL 18056 ENGINEER JOHN A. BATTS
3/21/2023 | 6:02 AM PDT

DOCUMENT NOT CONSIDERED FINAL UNLESS ALL SIGNATURES COMPLETED

REVISIONS							SHEET NO.
NO.	BY:	DATE:	NO.	BY:	DATE:		S2-34
1			3				TOTAL SHEETS
2			4				40

DRAWN BY :	T. BANKOVICH	DATE :	12-22
CHECKED BY :	J.A. BATTS	DATE :	12-22
DESIGN ENGINEER OF RECORD:	J.A. BATTS	DATE :	12-22

3/21/2023 8:16:31 AM P:\Raleigh\Projects\2019\Division 9 (Davenport)\B-5783\Structures\Drawings(NEW)\Final\280168_SB\B-5783_SMU_E2_280168.dgn