Project No.	Sheet No.
U–5748	Sig. 1.0

STATE OF NORTH CAROLINA
DIVISION OF HIGHWAYS

WAKE COUNTY

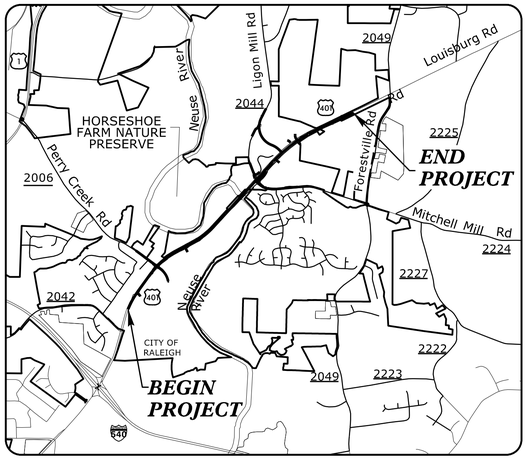

VICINITY MAP

NOT TO SCALE

DOCUMENT NOT CONSIDERED FINAL UNLESS ALL SIGNATURES COMPLETED

LOCATION: *US 401 (LOUISBURG ROAD) FROM SOUTH OF SR 2224 (MITCHELL MILL RD) AND SR 2006 (PERRY CREEK ROAD) INTERSECTION IMPROVEMENTS*

TYPE OF WORK: *TRAFFIC SIGNALS, SIGNAL COMMUNICATIONS, AND CCTV PLANS*

NAD 83
NA 2011

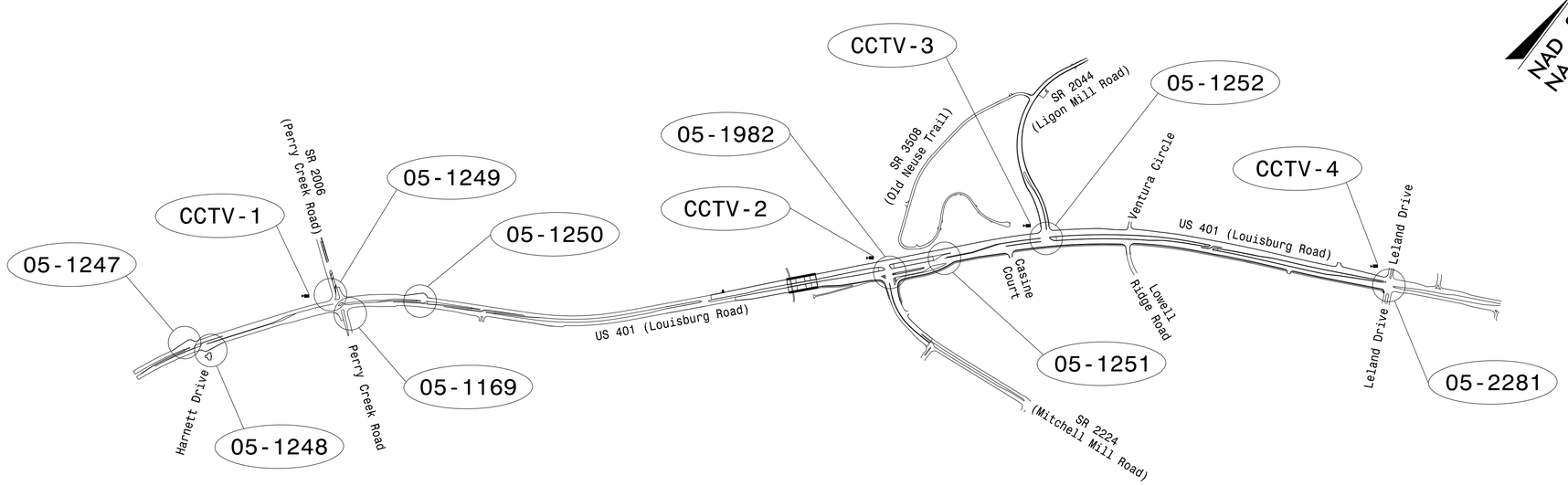

AECOM
NC Firm License No.: F-0342
5438 Wade Park Boulevard
Suite 200 Raleigh, NC 27607
Phone: 919-461-1100

Refer to "Roadway Standard Drawings NCDOT" dated January 2018 and "Standard Specifications for Roads and Structures" dated January 2018.

Index of Plans

Sheet #	Reference #	Location/Description
Sig. 1.0	N/A	Project Titlesheet
Sig. 1.1 – 1.2	N/A	2018 Standard Plate Sheets
Sig. 2.0 – 2.2	05–1247	US 401 SB (Louisburg Road) at U–turn North of SR 2042 (Fox Road)
Sig. 3.0 – 3.2	05–1248	US 401 NB (Louisburg Road) at U–turn South of SR 2006 (Perry Creek Road)
Sig. 4.0 – 5.2	05–1169	US 401 NB (Louisburg Road) at Perry Creek Road
Sig. 6.0 – 7.2	05–1249	US 401 SB (Louisburg Road) at SR 2006 (Perry Creek Road)
Sig. 8.0 – 8.2	05–1250	US 401 SB (Louisburg Road) at U–turn North of SR 2006 (Perry Creek Road)
Sig. 9.0 – 12.4	05–1982	US 401 (Louisburg Road) at SR 2224 (Mitchell Mill Road)
Sig. 13.0 – 13.2	05–1251	US 401 NB (Louisburg Road) at CFI CrossOver North of SR 2224 (Mitchell Mill Road)
Sig. 14.0 – 17.2	05–1252	US 401 (Louisburg Road) at SR 2044 (Ligon Mill Road)
Sig. 18.0 – 18.3	05–2281	US 401 (Louisburg Road) at Leland Drive
Sig. M1 – M8	N/A	Standard Metal Pole Sheets
SCP 1 – 23	N/A	Signal Communication Plans and Splice Details
SCP 24	N/A	CCTV Camera Installation for Wood Poles

AECOM
Contact:
Hemang M. Surti, PE
NC Signals & ITS Lead

NCDOT TRANSPORTATION SYSTEMS MANAGEMENT AND OPERATIONS UNIT
Contacts:
Robert J. Ziemba, PE, CPM – Central Region Signals Engineer
Keith M. Mims, PE – Signal Equipment Design Engineer
Gregory A. Green – Signal Communications Project Engineer

Prepared for the Office of:
DIVISION OF HIGHWAYS
TRANSPORTATION MOBILITY AND SAFETY DIVISION
Transportation Mobility and Safety Division · STATE OF NORTH CAROLINA · DEPARTMENT OF TRANSPORTATION
ITS and Signals Unit
750 N. Greenfield Parkway, Garner, NC 27529

Project: U–5748

CONTRACT: C204786

1/25/2023
8:41:01 PM
pw:\\aecom-nsrpw.bentley.com:AECOM_DS21_NA_2020\Documents\60609754-U-5748 Ligon Mill\900-CAD GIS\910_CAD\70_NCDOT_TIP\Traffic\Signals\Design\Signals\U-5748_sig_tsh.dgn

DocuSign Envelope ID: EE0A9FB1-617B-4D0E-A869-87C1A84AA294

PROJECT NO.	SHEET NO.
U-5748	Sig.1.1

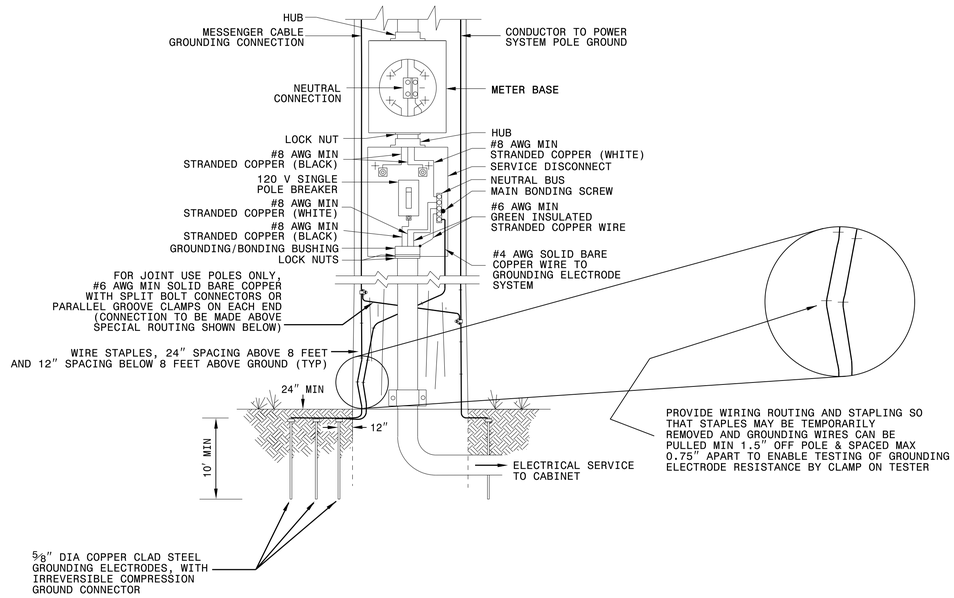

STATE OF NORTH CAROLINA
DEPT. OF TRANSPORTATION
DIVISION OF HIGHWAYS
RALEIGH, N.C.

1-18

ENGLISH STANDARD DRAWING FOR

ELECTRICAL SERVICE GROUNDING

GROUNDING AND BONDING

SHEET 1 OF 1

1700D01

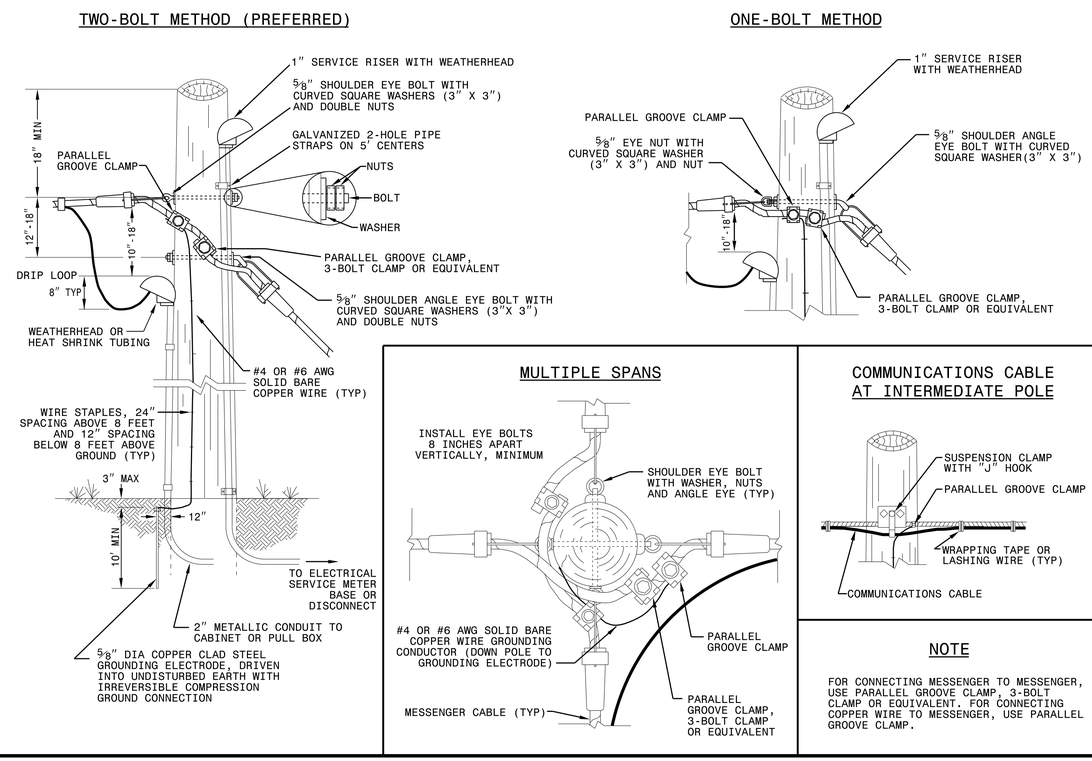

STATE OF NORTH CAROLINA
DEPT. OF TRANSPORTATION
DIVISION OF HIGHWAYS
RALEIGH, N.C.

1-18

ENGLISH STANDARD DRAWING FOR

WOOD POLES

METHODS OF ATTACHMENT AND GROUNDING

SHEET 1 OF 1

1720D01

DOCUMENT NOT CONSIDERED FINAL UNLESS ALL SIGNATURES COMPLETED

See Plate for Title

Prepared in the Offices of:

Transportation Mobility and Safety Division
STATE OF NORTH CAROLINA DEPARTMENT OF TRANSPORTATION
ITS & Signals Unit

750 N. Greenfield Parkway
Garner, NC 27529

SEAL

NORTH CAROLINA PROFESSIONAL SEAL 032108 ENGINEER MOHD A. ASLAMI

DocuSigned by: Mohd Aslami
5D9B0BA6DBB6495...
10/11/2017
DATE

11-2017-2017 08:56
U:\Projects\Drawings\Plate Sheets\2018_Plate Sheet.dgn
rwhough

DocuSign Envelope ID: EE0A9FB1-617B-4D0E-A869-87C1A84AA294

PROJECT NO.	SHEET NO.
U-5748	Sig.1.2

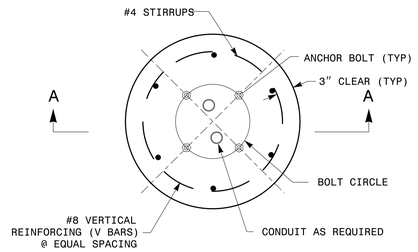

PEDESTAL FOUNDATION - PLAN VIEW

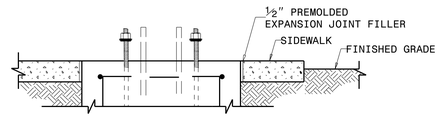

PEDESTAL FOUNDATION DETAILS FOR SIDEWALK

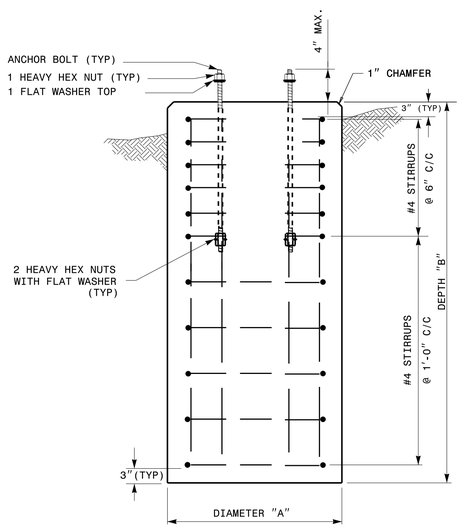

TYPES I, II & III

SECTION A-A

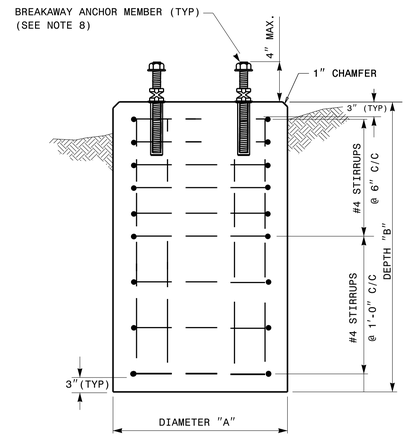

TYPES I & II ONLY

SECTION A-A

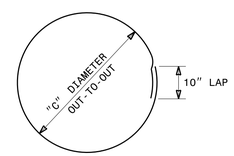

CLOSED HOOPS

NOTES:

1. CAST FOUNDATION AGAINST UNDISTURBED SOIL WHEREVER CONDITIONS PERMIT. IN UNSTABLE SOIL, CAST-IN-PLACE TUBE FORMS ARE ALLOWED WITH APPROVAL.
2. COMPLY WITH APPLICABLE PROVISIONS OF SECTION 825 FOR CONCRETE CONSTRUCTION.
3. USE CLASS "A" CONCRETE THAT MEETS THE REQUIREMENTS OF SECTION 1000 WITH A COMPRESSION STRENGTH AT 28 DAYS OF F'c= 3000 PSI (MIN.).
4. USE ASTM GRADE 60 DEFORMED BARS FOR ALL REINFORCING STEEL.
5. GRADE IS ASSUMED TO BE (8H:1V) OR FLATTER. FOUNDATION SIZE AND DEPTHS ARE BASED ON THE FOLLOWING SOIL DESIGN PARAMETERS:
   A. SANDY TYPE SOIL
   B. NO GROUND WATER WITHIN 5'-0" OF SURFACE ELEVATION
   C. WIND SPEED NOT TO EXCEED 140 MPH

   IF ACTUAL CONDITIONS VARY SUBSTANTIALLY FROM THOSE ASSUMED, THE FOUNDATION DEPTH MAY BE ADJUSTED. IN THIS CASE, CONTACT THE ENGINEER.
6. MAINTAIN AT LEAST 3" COVER ON ALL REINFORCEMENT.
7. ORIENT CONDUIT AS REQUIRED BY THE DESIGN OR AS DICTATED BY FIELD CONDITIONS.
8. USE ADHESIVE ANCHOR FOR THREADED COUPLING INSERT. FOR TYPE I MINIMUM DEPTH NECESSARY IS 0'-4½" AND FOR TYPE II MINIMUM DEPTH NECESSARY IS 0'-6⅝". FOLLOW MANUFACTURER'S INSTALLATION INSTRUCTIONS.

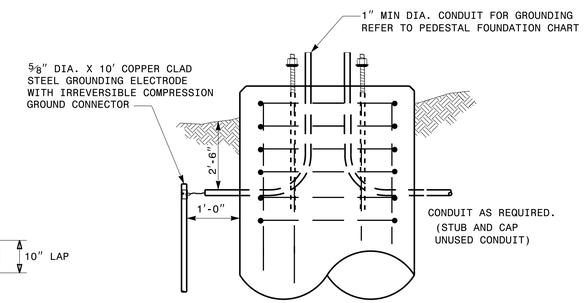

GROUNDING & CONDUIT DETAIL

PEDESTAL FOUNDATION TYPE AND SIZE

TYPE	PEDESTAL DESCRIPTION	SIZE			ANCHOR BOLT		INSTALL GROUNDING SYSTEM (YES/NO)
		DIAMETER "A" FT	DEPTH "B" FT	CONCRETE VOLUME CY	DIAMETER (MIN.) IN	LENGTH FT-IN	
I	PEDESTRIAN PUSHBUTTON	2'-0"	3'-6"	.41	½	1'-6"	NO
II	NORMAL-DUTY	2'-0"	5'-0"	.58	¾	2'-0"	YES
III	HEAVY-DUTY	2'-6"	7'-0"	1.27	1	4'-0"	YES

REINFORCING STEEL SCHEDULE

TYPE	V-BAR				STIRRUP								TOTAL STEEL WEIGHT LBS
	SIZE #	QTY	LENGTH	WEIGHT LBS	SIZE #	QUANTITY VERTICAL SPACING ON 6" CENTERS	QUANTITY VERTICAL SPACING ON 12" CENTERS	QUANTITY TOTAL	LENGTH	DIAMETER "C" FT	OVERLAP MIN.	WEIGHT LBS	
I	8	6	3'-0"	56	4	0	4	4	5'-7"	1'-6"	0'-10"	15	71
II	8	6	4'-6"	86	4	5	3	8	5'-7"	1'-6"	0'-10"	30	116
III	8	6	6'-6"	122	4	7	4	11	7'-2"	2'-0"	0'-10"	53	175

STATE OF NORTH CAROLINA
DEPT. OF TRANSPORTATION
DIVISION OF HIGHWAYS
RALEIGH, N.C.

1-18

ENGLISH STANDARD DRAWING FOR
PEDESTALS
FOUNDATIONS

SHEET 1 OF 1

1743D01

See Plate for Title

DOCUMENT NOT CONSIDERED
FINAL UNLESS ALL
SIGNATURES COMPLETED

Prepared in the Offices of:

Transportation Mobility and Safety Division
STATE OF NORTH CAROLINA DEPARTMENT OF TRANSPORTATION
ITS & Signals Unit

750 N. Greenfield Parkway
Garner, NC 27529

SEAL
NORTH CAROLINA
PROFESSIONAL
SEAL
028094
ENGINEER
DEBESH C. SARKAR

DocuSigned by:
Debesh C. Sarkar
44EBE32E147E4C4...
10/11/2017
DATE

11-OCT-2017 03:03
U:\Projects\Std Drawings\Plate Sheets\2018_Plate Sheet .dgn
rwhough

DocuSign Envelope ID: EE0A9FB1-617B-4D0E-A869-87C1A84AA294

PROJECT REFERENCE NO.	SHEET NO.
U-5748	Sig. 2.0

PHASING DIAGRAM

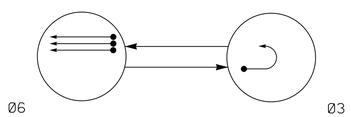

PHASING DIAGRAM DETECTION LEGEND

- DETECTED MOVEMENT
- UNDETECTED MOVEMENT (OVERLAP)
- UNSIGNALIZED MOVEMENT
- PEDESTRIAN MOVEMENT

TABLE OF OPERATION

SIGNAL FACE	PHASE Ø6	PHASE Ø3	FLASH
31	R		R
61, 62, 63		R	Y

SIGNAL FACE I.D.

All Heads L.E.D.

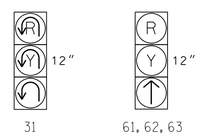

SE-PAC 2070 LOOP & DETECTOR UNIT INSTALLATION CHART

INDUCTIVE LOOPS						DETECTOR PROGRAMMING															
							TIMING		OPERATION MODE										STATUS	
LOOP NO.	SIZE (ft)	TURNS	DIST. FROM STOPBAR (ft)	NEW	EXISTING	ASSIGNED PHASE	DELAY	EXTEND (STRETCH)	0 VEHICLE	1 PEDESTRIAN	2 1 CALL	3 STOP A	4 STOP B	5 PROTFRE LEFT	6 PROTFRE THROUGH	7 AND	SWITCH	SYSTEM LOOPS	NEW	EXISTING
3A	6X40	2-4-2	0	X	-	3	- SEC.	- SEC.	X	-	-	-	-	-	-	-	-	-	X	-
6A	6X6	5	355	X	-	6	- SEC.	- SEC.	X	-	-	-	-	-	-	-	-	-	X	-
6B	6X6	5	355	X	-	6	- SEC.	- SEC.	X	-	-	-	-	-	-	-	-	-	X	-
6C	6X6	5	355	X	-	6	- SEC.	- SEC.	X	-	-	-	-	-	-	-	-	-	X	-

2 Phase
Fully Actuated
(Raleigh Signal System)

NOTES

1. Refer to "Roadway Standard Drawings NCDOT" dated January 2018 and "Standard Specifications for Roads and Structures" dated January 2018.
2. Do not program signal for late night flashing operation unless otherwise directed by the Engineer.
3. Set all detector units to presence mode.
4. Locate new cabinet so as not to obstruct sight distance of vehicles turning right on red.
5. Maximum times shown in timing chart are for free-run operation only. Coordinated signal system timing values supersede these values.
6. Program Phase 2 as a dummy phase for Ring 1.

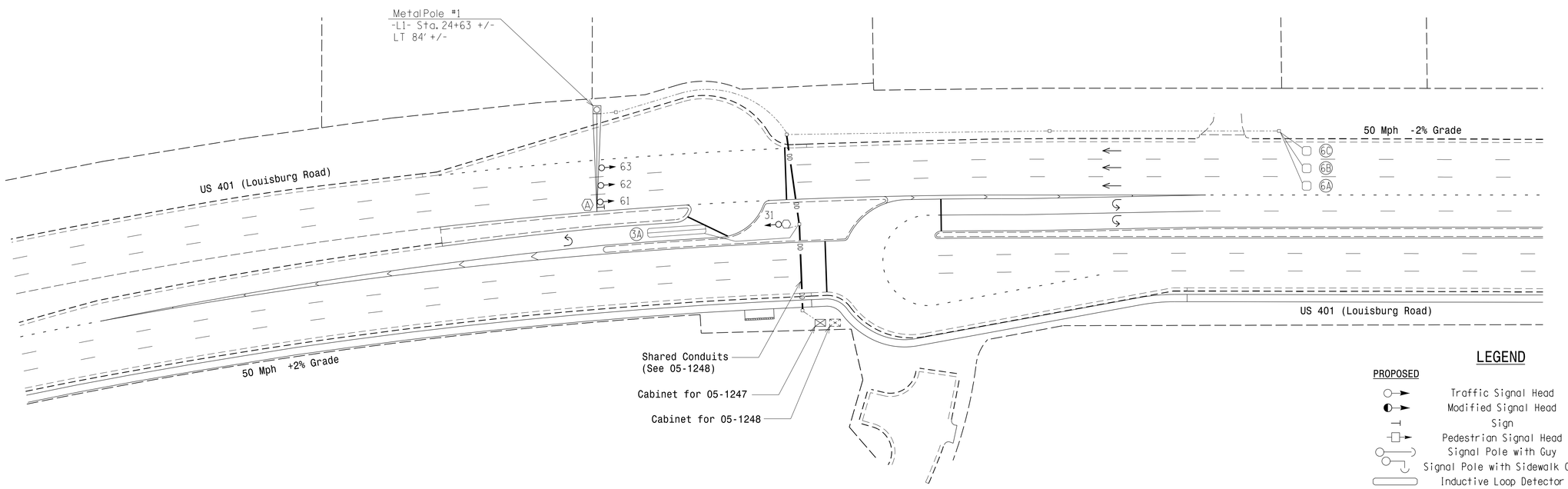

LEGEND

PROPOSED		EXISTING
	Traffic Signal Head	
	Modified Signal Head	N/A
	Sign	
	Pedestrian Signal Head	
	Signal Pole with Guy	
	Signal Pole with Sidewalk Guy	
	Inductive Loop Detector	
	Controller & Cabinet	
	Junction Box	
	2-in Underground Conduit	
N/A	Right of Way	
	Directional Arrow	
DD	Directional Drill	N/A
	Type II Signal Pedestal	
	Metal Pole with Mastarm	
A	No Left Turn Sign (R3-2)	A

SE-PAC 2070 TIMING CHART

FEATURE	PHASE 2	PHASE 3	PHASE 6
Min Green *	14	7	14
Passage Gap *	-	2.0	6.0
Maximum Green *	120	30	120
Yellow Change	5.0	3.0	5.0
Red Clear	1.1	4.2	1.1
Walk *	-	-	-
Pedestrian Clear	-	-	-
Added Initial *	-	-	1.5
Maximum Initial *	-	-	40
Time Before Reduction *	-	-	20
Time To Reduce *	-	-	40
Minimum Gap	-	-	3.0
Recall Mode	-	-	MIN RECALL
Vehicle Call Memory	-	NON-LOCK	LOCK
Dual Entry	-	-	-
Simultaneous Gap	ON	ON	ON

* These values may be field adjusted. Do not adjust Min Green and Extension times for phases 2 and 6 lower than what is shown. Min Green for all other phases should not be lower than 4 seconds.

New Installation

AECOM
NC Firm License No.: F-0342
5438 Wade Park Boulevard
Suite 200 Raleigh, NC 27607
Phone: 919-461-1100

Prepared for the Offices of:
Transportation Mobility and Safety Division
STATE OF NORTH CAROLINA DEPARTMENT OF TRANSPORTATION
Signal Design Section
750 N.Greenfield Pkwy,Garner,NC 27529

SCALE 0 40 1"=40'

US 401 SB (Louisburg Road)
at
U-Turn North of
SR 2042 (Fox Road)

Division 5 Wake County Raleigh

PLAN DATE: Jan 2023 REVIEWED BY: F.A. Campbell
PREPARED BY: H.M. Surti REVIEWED BY:

REVISIONS	INIT.	DATE

DOCUMENT NOT CONSIDERED FINAL UNLESS ALL SIGNATURES COMPLETED

SEAL
NORTH CAROLINA PROFESSIONAL SEAL 034481 ENGINEER HEMANG M. SURTI

DocuSigned by: Hemang M. Surti 1/24/2023

SIG. INVENTORY NO. 05-1247

1/24/2023
DgnFile:pw:\\pwdc-mon-nrw.bentley.com:AECOM_US21_NA_2020\Documents\60609754-U-5748 Ligon Mill\900-CAD GIS\910_CAD\70_NCDOT_TIP\Traffic\Signals\Designs\051247_sig.dsn_2022XXX.dgn
mitchell.cavenaugh

DocuSign Envelope ID: EE0A9FB1-617B-4D0E-A869-87C1A84AA294

PROJECT REFERENCE NO.	SHEET NO.
U-5748	Sig. 2.1

18 CHANNEL CONFLICT MONITOR PROGRAMMING DETAIL

(remove jumpers and set switches as shown)

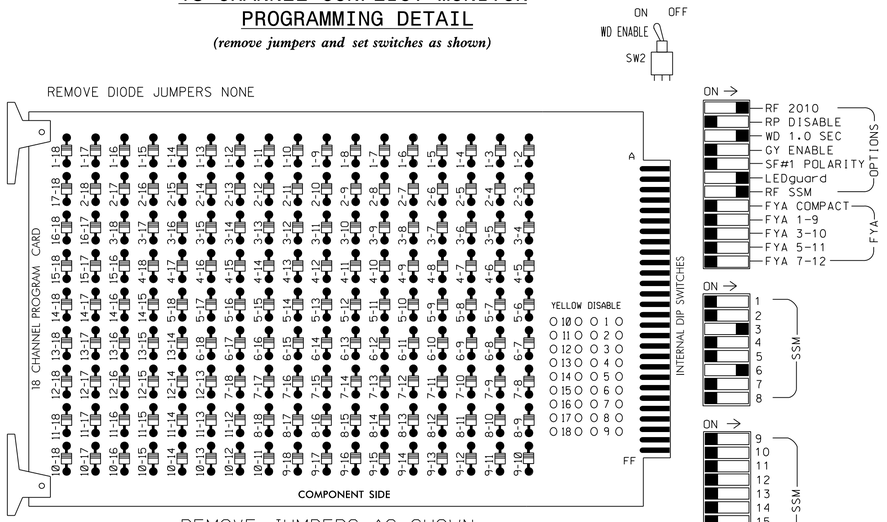

■ = DENOTES POSITION OF SWITCH

NOTES:

1. Card is provided with all diode jumpers in place. Removal of any jumper allows its channels to run concurrently.
2. Ensure jumpers SEL2-SEL5 and SEL9 are present on the monitor board.
3. Ensure that Red Enable is active at all times during normal operation.
4. Connect serial cable from conflict monitor to comm. port 1 of 2070 controller. Ensure conflict monitor communicates with 2070.

NOTES

1. To prevent "flash-conflict" problems, insert red flash program blocks for all unused vehicle load switches in the output file. The installer shall verify that signal heads flash in accordance with the Signal Plans.
2. Program controller to start up in phase 6 green.
3. Enable simultaneous gap-out feature, on controller unit, for all phases.
4. Program phase 6, on controller unit, for volume density operation.
5. The cabinet and controller are part of the Raleigh Signal System.

EQUIPMENT INFORMATION

CONTROLLER.....2070LX
CABINET.....332 W/ AUX
SOFTWARE.....SE-PAC2070
CABINET MOUNT.....BASE
OUTPUT FILE POSITIONS...18 WITH AUX. OUTPUT FILE
LOAD SWITCHES USED.....S4,S8
PHASES USED.....2*,3,6
OVERLAP "A".....NOT USED
OVERLAP "B".....NOT USED
OVERLAP "C".....NOT USED
OVERLAP "D".....NOT USED

* Phase used for timing purposes only.

SIGNAL HEAD HOOK-UP CHART

LOAD SWITCH NO.	S1	S2	S3	S4	S5	S6	S7	S8	S9	S10	S11	S12	AUX S1	AUX S2	AUX S3	AUX S4	AUX S5	AUX S6
CMU CHANNEL NO.	1	2	13	3	4	14	5	6	15	7	8	16	9	10	17	11	12	18
PHASE	1	2	2 PED	3	4	4 PED	5	6	6 PED	7	8	8 PED	OLA	OLB	SPARE	OLC	OLD	SPARE
SIGNAL HEAD NO.	NU	NC	NU	31	NU	NU	NU	61,62, 63	NU	NU	NU	NU	NU	NU	NU	NU	NU	NU
RED								134										
YELLOW								135										
GREEN																		
RED ARROW				116														
YELLOW ARROW				117														
GREEN ARROW				118				136										

NU = Not Used
NC = Not Connected

INPUT FILE POSITION LAYOUT

(front view)

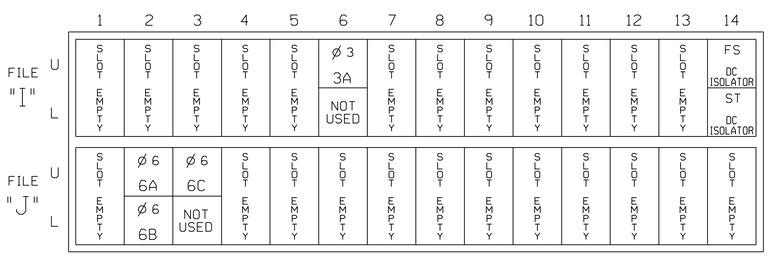

EX.: 1A, 2A, ETC. = LOOP NO.'S

FS = FLASH SENSE
ST = STOP TIME

INPUT FILE CONNECTION & PROGRAMMING CHART

LOOP NO.	LOOP TERMINAL	INPUT FILE POS.	PIN NO.	DETECTOR NO.	NEMA PHASE	DELAY TIME	EXTEND (STRETCH) TIME
3A	TB4-9,10	I6U	41	11	3		
6A	TB3-5,6	J2U	40	21	6		
6B	TB3-7,8	J2L	44	22	6		
6C	TB3-9,10	J3U	64	23	6		

INPUT FILE POSITION LEGEND: J2L
FILE J
SLOT 2
LOWER

THIS ELECTRICAL DETAIL IS FOR
THE SIGNAL DESIGN: 05-1247
DESIGNED: Jan 2023
SEALED: 1/24/2023
REVISED:

Electrical Detail

DOCUMENT NOT CONSIDERED FINAL UNLESS ALL SIGNATURES COMPLETED

ELECTRICAL AND PROGRAMMING DETAILS FOR:

Prepared for the Offices of:
Traffic Engineering Branch, Mobility and Safety Division, Signals Management Section
750 N.Greenfield Pkwy,Garner,NC 27529

US 401 SB (Louisburg Road)
at
U-Turn North of
SR 2042 (Fox Road)

Division 5 Wake County Raleigh

PLAN DATE:	Jan 2023	REVIEWED BY:	H.M. Surti
PREPARED BY:	A. Ravipati	REVIEWED BY:	

REVISIONS	INIT.	DATE

SEAL
NORTH CAROLINA PROFESSIONAL SEAL 034481 ENGINEER HEMANG M. SURTI

DocuSigned by: Hemang M. Surti AF12B8DC7A5A41... 1/24/2023

SIG. INVENTORY NO. 05-1247

AECOM
NC Firm License No.: F-0342
5438 Wade Park Boulevard
Suite 200 Raleigh, NC 27607
Phone: 919-461-1100

1/24/2023
pw://aecom-na-pw.bentley.com:AECOM_DS21_NA_2020\Documents\60609754-U-5748 Ligon Mill\900-CAD GIS\910_CAD\70_NCDOT_TIP\Traffic\Signals\Design\Signals\Electrical Details_2022\051247_sm_ele_2022XXXX.dgn
michael.cavenaugh

DocuSign Envelope ID: EE0A9FB1-617B-4D0E-A869-87C1A84AA294

METAL POLE No. 1

PROJECT REFERENCE NO.	SHEET NO.
U-5748	Sig. 2.2

SPECIAL NOTE

The contractor is responsible for verifying that the mast arm attachment height (H1) will provide the "Design Height" clearance from the roadway before submitting final shop drawings for approval. Verify elevation data below which was obtained by field measurement or from available project survey data.

Elevation Data for Mast Arm Attachment (H1)

Elevation Differences for:	Pole 1
Baseline reference point at ℄ Foundation @ ground level	0.0 ft.
Elevation difference at High point of roadway surface	0.32 ft.
Elevation difference at Edge of travelway or face of curb	0.27 ft.

MAST ARM LOADING SCHEDULE

LOADING SYMBOL	DESCRIPTION	AREA	SIZE	WEIGHT
	RIGID MOUNTED SIGNAL HEAD 12"-3 SECTION-WITH BACKPLATE	9.3 S.F.	25.5" W X 52.5" L	60 LBS
	SIGN RIGID MOUNTED	9.0 S.F.	36.0" W X 36.0" L	17 LBS
Street Name	STREET NAME SIGN RIGID MOUNTED	12.0 S.F.	18.0" W X 96.0" L	27 LBS

Design Loading for METAL POLE NO. 1

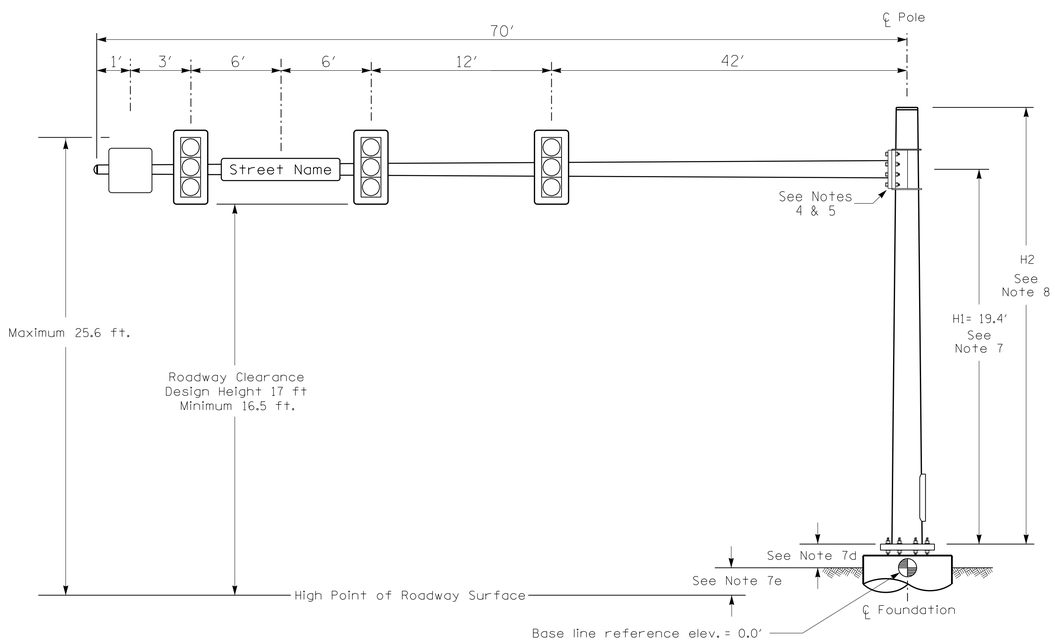

Elevation View

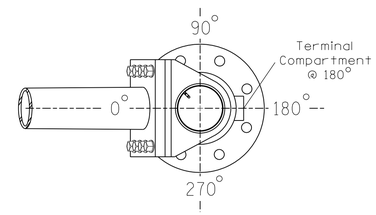

POLE RADIAL ORIENTATION

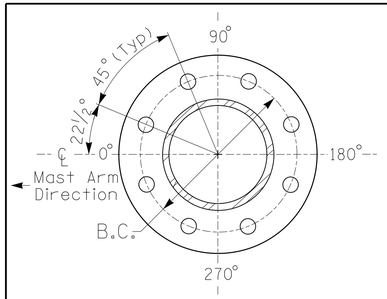

8 BOLT BASE PLATE DETAIL

See Note 6

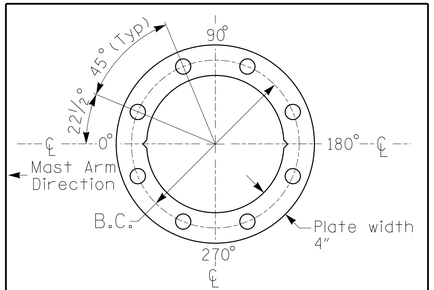

BASE PLATE TEMPLATE & ANCHOR BOLT LOCK PLATE DETAIL

For 8 Bolt Base Plate

NOTES

DESIGN REFERENCE MATERIAL

1. Design the traffic signal structure and foundation in accordance with:
   - The 6th Edition 2013 AASHTO "Standard Specifications for Structural Supports for Highway Signs, Luminaires, and Traffic Signals, including all of the latest interim revisions.
   - The 2018 NCDOT "Standard Specifications for Roads and Structures." The latest addenda to the specifications can be found in the traffic signal project special provisions.
   - The 2018 NCDOT Roadway Standard Drawings.
   - The traffic signal project plans and special provisions.
   - The NCDOT "Metal Pole Standards" located at the following NCDOT website: https://connect.ncdot.gov/resources/safety/Pages/ITS-Design-Resources.aspx

DESIGN REQUIREMENTS

2. Design the traffic signal structure using the loading conditions shown in the elevation views. These are anticipated worst case "design loads" and may not represent the actual loads that will be applied at the time of the installation. The contractor should refer to the traffic signal plans for the actual loads that will be applied at the time of the installation.
3. Design all signal supports using stress ratios that do not exceed 0.9.
4. The camber design for the mast arm deflection should provide an appearance of a low pitched arch where the tip or the free end of the mast arm does not deflect below horizontal when fully loaded.
5. A clamp-type bolted mast arm-to-pole connection may be used instead of the welded ring stiffened box connection shown as long as the connection meets all of the design requirements.
6. Design base plate with 8 anchor bolt holes. Provide 2 inch x 60 inch anchor bolts.
7. The mast arm attachment height (H1) shown is based on the following design assumptions:
   a. Mast arm slope and deflection are not considered in determining the arm attachment height as they are assumed to offset each other.
   b. Signal heads are rigidly mounted and vertically centered on the mast arm.
   c. The roadway clearance height for design is as shown in the elevation views.
   d. The top of the pole base plate is 0.75 feet above the ground elevation.
   e. Refer to the Elevation Data Chart for the elevation differences between the proposed foundation ground level and the high point of the roadway.
8. The pole manufacturer will determine the total height (H2) of each pole using the greater of the following:
   - Mast arm attachment height (H1) plus 2 feet, or
   - H1 plus 1/2 of the total height of the mast arm attachment assembly plus 1 foot.
9. If pole location adjustments are required, the contractor must gain approval from the Engineer as this may affect the mast arm lengths and arm attachment heights. The contractor may contact the Signal Design Section Senior Structural Engineer for assistance at (919) 814-5000.
10. The contractor is responsible for verifying that the mast arm length shown will allow proper positioning of the signal heads over the roadway.
11. The contractor is responsible for providing soil penetration testing data (SPT) to the pole manufacturer so site specific foundations can be designed.

AECOM
NC Firm License No.: F-0342
5438 Wade Park Boulevard
Suite 200 Raleigh, NC 27607
Phone: 919-461-1100

NCDOT Wind Zone 4 (90 mph)

DOCUMENT NOT CONSIDERED FINAL UNLESS ALL SIGNATURES COMPLETED

Prepared for the Offices of:
Transportation Mobility and Safety Division
STATE OF NORTH CAROLINA DEPARTMENT OF TRANSPORTATION
Signal Design Section
750 N.Greenfield Pkwy,Garner,NC 27529

US 401 SB (Louisburg Road)
at
U-Turn North of
SR 2042 (Fox Road)

Division 5 Wake County Raleigh

PLAN DATE:	Jan 2023	REVIEWED BY:	F.A. Campbell
PREPARED BY:	H.M. Surti	REVIEWED BY:	

SCALE 0 N/A N/A

REVISIONS	INIT.	DATE

SEAL
NORTH CAROLINA PROFESSIONAL SEAL 034481 ENGINEER HEMANG M. SURTI

DocuSigned by: Hemang M. Surti AF12BB0637A5481... 1/24/2023

SIG. INVENTORY NO. 05-1247

1/24/2023
DgnPlot@ncdot-ma-pw-bentley.com:AECOM.DS21.NA.2020\Documents\60609754-U-5748 Ligon Mill\900-CAD GIS\910_CAD\470_NCDOT_TIP\Traffic\Signals\Design\Signals\05-1247_Sig_no_2022XXXX.dgn
mitchael.cavenaugh

DocuSign Envelope ID: EE0A9FB1-617B-4D0E-A869-87C1A84AA294

PROJECT REFERENCE NO.	SHEET NO.
U-5748	Sig. 3.0

PHASING DIAGRAM

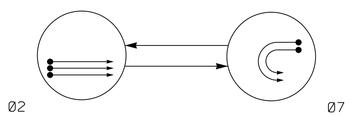

PHASING DIAGRAM DETECTION LEGEND

- DETECTED MOVEMENT
- UNDETECTED MOVEMENT (OVERLAP)
- UNSIGNALIZED MOVEMENT
- PEDESTRIAN MOVEMENT

TABLE OF OPERATION

SIGNAL FACE	PHASE Ø2	PHASE Ø7	FLASH
21, 22, 23	↑	R	Y
71, 72	(R) ↶	↷	(R)

SIGNAL FACE I.D.

All Heads L.E.D.

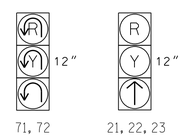

SE-PAC 2070 LOOP & DETECTOR UNIT INSTALLATION CHART

INDUCTIVE LOOPS						DETECTOR PROGRAMMING															
							TIMING		OPERATION MODE										STATUS	
LOOP NO.	SIZE (ft)	TURNS	DIST. FROM STOPBAR (ft)	NEW	EXISTING	ASSIGNED PHASE	DELAY	EXTEND (STRETCH)	0 VEHICLE	1 PEDESTRIAN	2 1 CALL	3 STOP A	4 STOP B	5 PROT/PER LEFT	6 PROT/PER THROUGH	7 AND	SWITCH	SYSTEM LOOPS	NEW	EXISTING
2A	6X6	5	355	X	-	2	- SEC.	- SEC.	X	-	-	-	-	-	-	-	-	-	X	-
2B	6X6	5	355	X	-	2	- SEC.	- SEC.	X	-	-	-	-	-	-	-	-	-	X	-
2C	6X6	5	355	X	-	2	- SEC.	- SEC.	X	-	-	-	-	-	-	-	-	-	X	-
7A	6X40	2-4-2	0	X	-	7	- SEC.	- SEC.	X	-	-	-	-	-	-	-	-	-	X	-
7B	6X40	2-4-2	0	X	-	7	- SEC.	- SEC.	X	-	-	-	-	-	-	-	-	-	X	-

2 Phase
Fully Actuated
(Raleigh Signal System)

NOTES

1. Refer to "Roadway Standard Drawings NCDOT" dated January 2018 and "Standard Specifications for Roads and Structures" dated January 2018.
2. Do not program signal for late night flashing operation unless otherwise directed by the Engineer.
3. Set all detector units to presence mode.
4. Locate new cabinet so as not to obstruct sight distance of vehicles turning right on red.
5. Maximum times shown in timing chart are for free-run operation only. Coordinated signal system timing values supersede these values.
6. Program Phase 3 as a dummy phase for Ring 1.

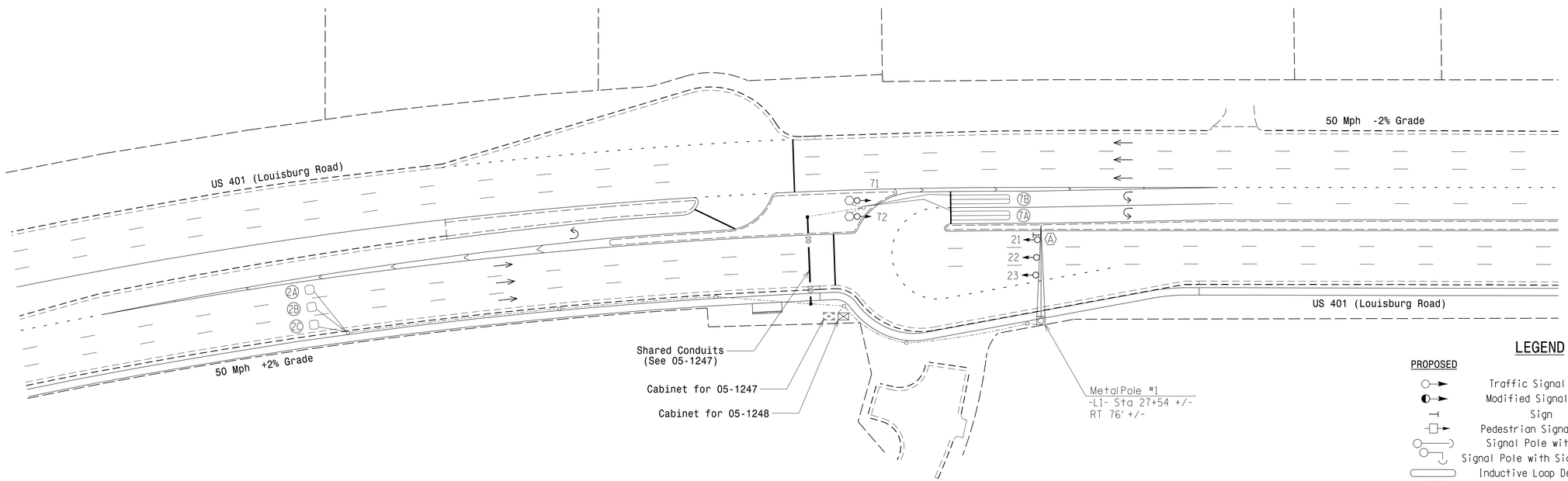

LEGEND

PROPOSED		EXISTING
	Traffic Signal Head	
	Modified Signal Head	N/A
	Sign	
	Pedestrian Signal Head	
	Signal Pole with Guy	
	Signal Pole with Sidewalk Guy	
	Inductive Loop Detector	
	Controller & Cabinet	
	Junction Box	
	2-in Underground Conduit	
N/A	Right of Way	
	Directional Arrow	
DD	Directional Drill	N/A
	Type II Signal Pedestal	
	Metal Pole with Mastarm	
A	No Left Turn Sign (R3-2)	A

SE-PAC 2070 TIMING CHART

FEATURE	PHASE 2	PHASE 3	PHASE 7
Min Green *	14	7	7
Passage Gap *	6.0	-	2.0
Maximum Green *	120	30	30
Yellow Change	4.6	3.0	3.0
Red Clear	1.1	5.1	5.1
Walk *	-	-	-
Pedestrian Clear	-	-	-
Added Initial *	1.5	-	-
Maximum Initial *	40	-	-
Time Before Reduction *	20	-	-
Time To Reduce *	40	-	-
Minimum Gap	3.0	-	-
Recall Mode	MIN RECALL	-	-
Vehicle Call Memory	LOCK	-	NON-LOCK
Dual Entry	-	-	-
Simultaneous Gap	ON	ON	ON

* These values may be field adjusted. Do not adjust Min Green and Extension times for phase 2 lower than what is shown. Min Green for all other phases should not be lower than 4 seconds.

New Installation

AECOM
NC Firm License No.: F-0342
5438 Wade Park Boulevard
Suite 200 Raleigh, NC 27607
Phone: 919-461-1100

Prepared for the Offices of:
Transportation Mobility and Safety Division
STATE OF NORTH CAROLINA DEPARTMENT OF TRANSPORTATION
Signal Design Section
750 N.Greenfield Pkwy,Garner,NC 27529

SCALE 0 40
1"=40'

US 401 NB (Louisburg Road) at U-Turn South of SR 2006 (Perry Creek Road)

Division 5 Wake County Raleigh

PLAN DATE: Jan 2023	REVIEWED BY: F.A. Campbell
PREPARED BY: H.M. Surti	REVIEWED BY:

REVISIONS	INIT.	DATE

DOCUMENT NOT CONSIDERED FINAL UNLESS ALL SIGNATURES COMPLETED

SEAL
NORTH CAROLINA PROFESSIONAL SEAL 034481 ENGINEER HEMANG M. SURTI

DocuSigned by:
Hemang M. Surti 1/24/2023
-A7 1/24/2023 7:42:48 PM EST

SIG. INVENTORY NO. 05-1248

1/24/2023
DGN: pw:\\aecom-na-pw.bentley.com:AECOM_DS21_NA_20204\Documents\60609754\U-5748 Ligon Mill\900-CAD GIS\910_CAD\70_NCDOT_TIP\Traffic\Signals\Signals\051248.sig.dsn_2022XXXX.dgn
michael.cavenaugh

DocuSign Envelope ID: EE0A9FB1-617B-4D0E-A869-87C1A84AA294

PROJECT REFERENCE NO.	SHEET NO.
U-5748	Sig. 3.1

18 CHANNEL CONFLICT MONITOR PROGRAMMING DETAIL

(remove jumpers and set switches as shown)

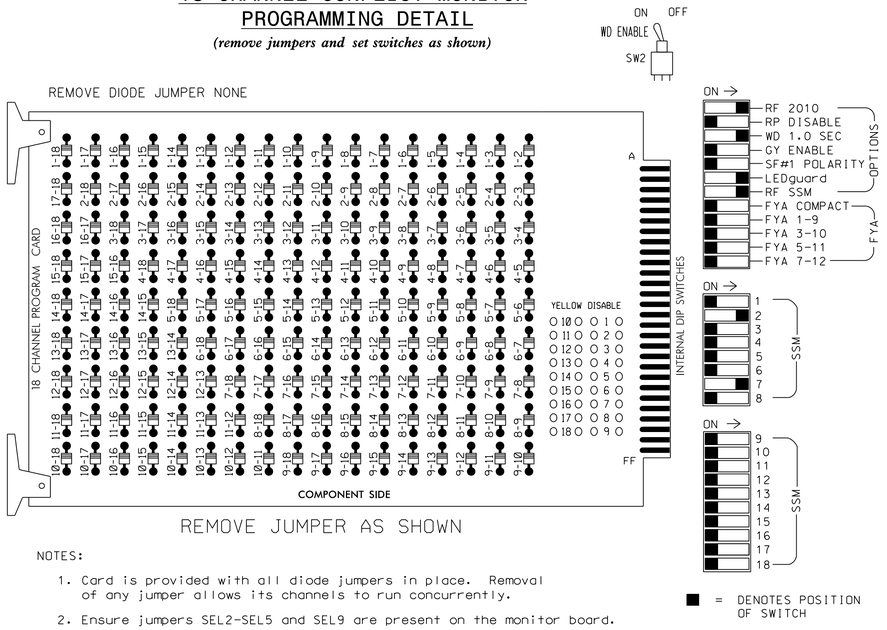

■ = DENOTES POSITION OF SWITCH

NOTES:

1. Card is provided with all diode jumpers in place. Removal of any jumper allows its channels to run concurrently.
2. Ensure jumpers SEL2-SEL5 and SEL9 are present on the monitor board.
3. Ensure that Red Enable is active at all times during normal operation.
4. Connect serial cable from conflict monitor to comm. port 1 of 2070 controller. Ensure conflict monitor communicates with 2070.

NOTES

1. To prevent "flash-conflict" problems, insert red flash program blocks for all unused vehicle load switches in the output file. The installer shall verify that signal heads flash in accordance with the Signal Plans.
2. Program controller to start up in phase 2 green.
3. Enable simultaneous gap-out feature, on controller unit, for all phases.
4. Program phase 2, on controller unit, for volume density operation.
5. The cabinet and controller are part of the Raleigh Signal System.

EQUIPMENT INFORMATION

CONTROLLER.....2070LX
CABINET.....332 W/ AUX
SOFTWARE.....SE-PAC2070
CABINET MOUNT.....BASE
OUTPUT FILE POSITIONS...18 WITH AUX. OUTPUT FILE
LOAD SWITCHES USED.....S2,S10
PHASES USED.....2,3*,7
OVERLAP "A".....NOT USED
OVERLAP "B".....NOT USED
OVERLAP "C".....NOT USED
OVERLAP "D".....NOT USED

* Phase used for timing purposes only

SIGNAL HEAD HOOK-UP CHART

LOAD SWITCH NO.	S1	S2	S3	S4	S5	S6	S7	S8	S9	S10	S11	S12	AUX S1	AUX S2	AUX S3	AUX S4	AUX S5	AUX S6
CMU CHANNEL NO.	1	2	13	3	4	14	5	6	15	7	8	16	9	10	17	11	12	18
PHASE	1	2	2 PED	3	4	4 PED	5	6	6 PED	7	8	8 PED	OLA	OLB	SPARE	OLC	OLD	SPARE
SIGNAL HEAD NO.	NU	21,22, 23	NU	NC	NU	NU	NU	NU	NU	71,72	NU	NU	NU	NU	NU	NU	NU	NU
RED		128																
YELLOW		129																
GREEN																		
RED ARROW										122								
YELLOW ARROW										123								
GREEN ARROW		130								124								

NU = Not Used
NC = Not Connected

INPUT FILE POSITION LAYOUT

(front view)

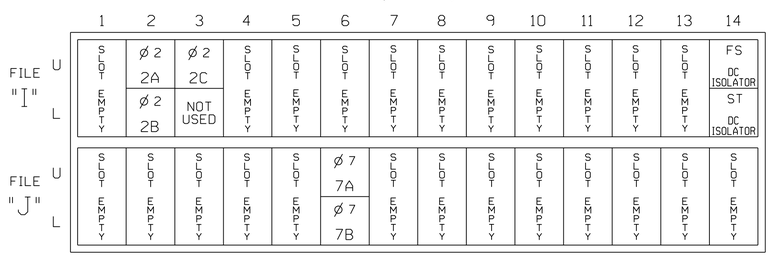

EX.: 1A, 2A, ETC. = LOOP NO.'S

FS = FLASH SENSE
ST = STOP TIME

INPUT FILE CONNECTION & PROGRAMMING CHART

LOOP NO.	LOOP TERMINAL	INPUT FILE POS.	PIN NO.	DETECTOR NO.	NEMA PHASE	DELAY TIME	EXTEND (STRETCH) TIME
2A	TB2-5,6	I2U	39	3	2		
2B	TB2-7,8	I2L	43	4	2		
2C	TB2-9,10	I3U	63	5	2		
7A	TB5-9,10	J6U	42	31	7		
7B	TB5-11,12	J6L	46	32	7		

INPUT FILE POSITION LEGEND: J2L
FILE J
SLOT 2
LOWER

THIS ELECTRICAL DETAIL IS FOR
THE SIGNAL DESIGN: 05-1248
DESIGNED: Jan 2023
SEALED: 1/24/2023
REVISED:

Electrical Detail

DOCUMENT NOT CONSIDERED FINAL UNLESS ALL SIGNATURES COMPLETED

ELECTRICAL AND PROGRAMMING DETAILS FOR:

Prepared for the Offices of:
NC Department of Transportation Mobility and Safety Division Traffic Engineering Branch Signals Management Section
750 N.Greenfield Pkwy,Garner,NC 27529

US 401 NB (Louisburg Road)
at
U-Turn South of
SR 2006 (Perry Creek Road)

Division 5 Wake County Raleigh

PLAN DATE:	Jan 2023	REVIEWED BY:	H.M. Surti
PREPARED BY:	A. Ravipati	REVIEWED BY:	

REVISIONS	INIT.	DATE

SEAL
NORTH CAROLINA PROFESSIONAL SEAL 034481 ENGINEER HEMANG M. SURTI

DocuSigned by: Hemang M. Surti 1/24/2023
A1F1D0BC7C4A4F...

SIG. INVENTORY NO. 05-1248

AECOM
NC Firm License No.: F-0342
5438 Wade Park Boulevard
Suite 200 Raleigh, NC 27607
Phone: 919-461-1100

1/24/2023
pw:\\aecom-na-pw.bentley.com:AECOM_DS21_NA_2020\Documents\60609754-U-5748 Ligon Mill\900-CAD GIS\910_CAD\70_NCDOT_TIP\Traffic\Signals\Design\Signals\Electrical Details_2022\05248_sm_ele_2022XXXX.dgn
mitchell.cavenaugh

DocuSign Envelope ID: EE0A9FB1-617B-4D0E-A869-87C1A84AA294

METAL POLE No. 1

PROJECT REFERENCE NO.	SHEET NO.
U-5748	Sig. 3.2

SPECIAL NOTE

The contractor is responsible for verifying that the mast arm attachment height (H1) will provide the "Design Height" clearance from the roadway before submitting final shop drawings for approval. Verify elevation data below which was obtained by field measurement or from available project survey data.

Elevation Data for Mast Arm Attachment (H1)

Elevation Differences for:	Pole 1
Baseline reference point at ℄ Foundation @ ground level	0.0 ft.
Elevation difference at High point of roadway surface	1.48 ft.
Elevation difference at Edge of travelway or face of curb	-0.10 ft.

MAST ARM LOADING SCHEDULE

LOADING SYMBOL	DESCRIPTION	AREA	SIZE	WEIGHT
	RIGID MOUNTED SIGNAL HEAD 12"-3 SECTION-WITH BACKPLATE	9.3 S.F.	25.5" W X 52.5" L	60 LBS
	SIGN RIGID MOUNTED	9.0 S.F.	36.0" W X 36.0" L	17 LBS
Street Name	STREET NAME SIGN RIGID MOUNTED	12.0 S.F.	18.0" W X 96.0" L	27 LBS

Design Loading for METAL POLE NO. 1

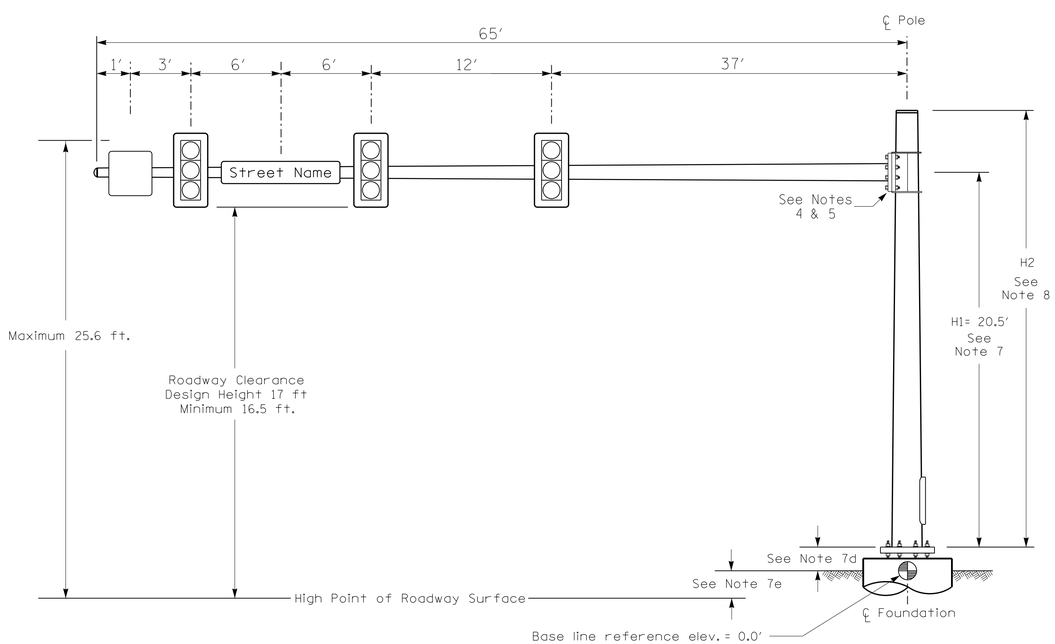

Elevation View

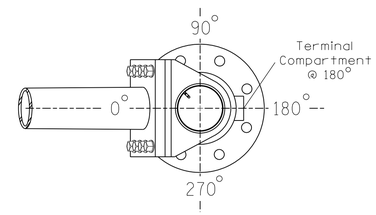

POLE RADIAL ORIENTATION

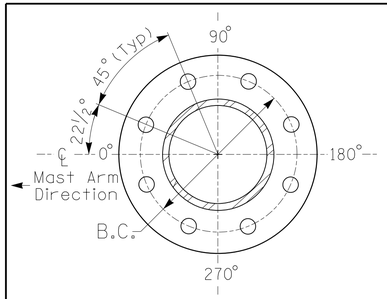

8 BOLT BASE PLATE DETAIL

See Note 6

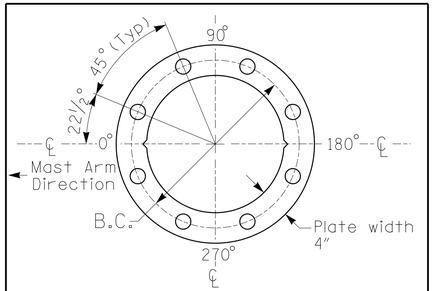

BASE PLATE TEMPLATE & ANCHOR BOLT LOCK PLATE DETAIL

For 8 Bolt Base Plate

NOTES

DESIGN REFERENCE MATERIAL

1. Design the traffic signal structure and foundation in accordance with:
   - The 6th Edition 2013 AASHTO "Standard Specifications for Structural Supports for Highway Signs, Luminaires, and Traffic Signals, including all of the latest interim revisions.
   - The 2018 NCDOT "Standard Specifications for Roads and Structures." The latest addenda to the specifications can be found in the traffic signal project special provisions.
   - The 2018 NCDOT Roadway Standard Drawings.
   - The traffic signal project plans and special provisions.
   - The NCDOT "Metal Pole Standards" located at the following NCDOT website: https://connect.ncdot.gov/resources/safety/Pages/ITS-Design-Resources.aspx

DESIGN REQUIREMENTS

2. Design the traffic signal structure using the loading conditions shown in the elevation views. These are anticipated worst case "design loads" and may not represent the actual loads that will be applied at the time of the installation. The contractor should refer to the traffic signal plans for the actual loads that will be applied at the time of the installation.
3. Design all signal supports using stress ratios that do not exceed 0.9.
4. The camber design for the mast arm deflection should provide an appearance of a low pitched arch where the tip or the free end of the mast arm does not deflect below horizontal when fully loaded.
5. A clamp-type bolted mast arm-to-pole connection may be used instead of the welded ring stiffened box connection shown as long as the connection meets all of the design requirements.
6. Design base plate with 8 anchor bolt holes. Provide 2 inch x 60 inch anchor bolts.
7. The mast arm attachment height (H1) shown is based on the following design assumptions:
   a. Mast arm slope and deflection are not considered in determining the arm attachment height as they are assumed to offset each other.
   b. Signal heads are rigidly mounted and vertically centered on the mast arm.
   c. The roadway clearance height for design is as shown in the elevation views.
   d. The top of the pole base plate is 0.75 feet above the ground elevation.
   e. Refer to the Elevation Data Chart for the elevation differences between the proposed foundation ground level and the high point of the roadway.
8. The pole manufacturer will determine the total height (H2) of each pole using the greater of the following:
   - Mast arm attachment height (H1) plus 2 feet, or
   - H1 plus 1/2 of the total height of the mast arm attachment assembly plus 1 foot.
9. If pole location adjustments are required, the contractor must gain approval from the Engineer as this may affect the mast arm lengths and arm attachment heights. The contractor may contact the Signal Design Section Senior Structural Engineer for assistance at (919) 814-5000.
10. The contractor is responsible for verifying that the mast arm length shown will allow proper positioning of the signal heads over the roadway.
11. The contractor is responsible for providing soil penetration testing data (SPT) to the pole manufacturer so site specific foundations can be designed.

AECOM
NC Firm License No.: F-0342
5438 Wade Park Boulevard
Suite 200 Raleigh, NC 27607
Phone: 919-461-1100

NCDOT Wind Zone 4 (90 mph)

DOCUMENT NOT CONSIDERED FINAL UNLESS ALL SIGNATURES COMPLETED

Prepared for the Offices of:
Transportation Mobility and Safety Division
STATE OF NORTH CAROLINA DEPARTMENT OF TRANSPORTATION
Signal Design Section
750 N.Greenfield Pkwy,Garner,NC 27529

US 401 NB (Louisburg Road)
at
U-Turn South of
SR 2006 (Perry Creek Road)

Division 5 Wake County Raleigh

PLAN DATE:	Jan 2023	REVIEWED BY:	F.A. Campbell
PREPARED BY:	H.M. Surti	REVIEWED BY:	

SCALE 0 N/A N/A

REVISIONS	INIT.	DATE

SEAL
NORTH CAROLINA PROFESSIONAL SEAL 034481 ENGINEER HEMANG M. SURTI

DocuSigned by: Hemang M. Surti AF12BB0637A5481... 1/24/2023

SIG. INVENTORY NO. 05-1248

1/24/2023
DgnPlot@aecom-na-pw-bentley.com:AECOM.DS21.NA.2020\Documents\60609754-U-5748 Ligon Mill\900-CAD GIS\910_CAD\470_NCDOT_TIP\Traffic\Signals\Design\Signals\05-1248_Sig_mp_2022XXXX.dgn
mitchael.cavenaugh

DocuSign Envelope ID: EE0A9FB1-617B-4D0E-A869-87C1A84AA294

PROJECT REFERENCE NO.	SHEET NO.
U-5748	Sig. 4.0

PHASING DIAGRAM

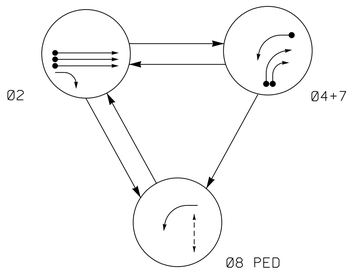

TABLE OF OPERATION

SIGNAL FACE	PHASE Ø2	Ø4+7	Ø8 PED	FLASHING
21, 22, 23	G	R	R	Y
24	F Y	R	R	Y
41, 42, 43	R	→	R	R
71	R	←	←	R
P81, P82	DW	DW	W	DRK

SIGNAL FACE I.D.

All Heads L.E.D.

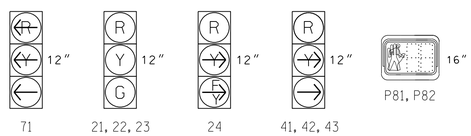

SE-PAC 2070 LOOP & DETECTOR UNIT INSTALLATION CHART

INDUCTIVE LOOPS						DETECTOR PROGRAMMING														
							TIMING		OPERATION MODE									STATUS	
ZONE NO.	SIZE (ft)	TURNS	DIST. FROM STOPBAR (ft)	NEW	EXISTING	ASSIGNED PHASE	DELAY	EXTEND (STRETCH)	0 VEHICLE	1 PEDESTRIAN	2 1 CALL	3 STOP A	4 STOP B	5 PROT/PER LEFT	6 PROT/PER THROUGH	7 AND	SWITCH	SYSTEM LOOPS	NEW	EXISTING
2A *	6X6	✳	355	✳	-	2	- SEC.	- SEC.	X	-	-	-	-	-	-	-	-	-	✳	-
2B *	6X6	✳	355	✳	-	2	- SEC.	- SEC.	X	-	-	-	-	-	-	-	-	-	✳	-
2C *	6X6	✳	355	✳	-	2	- SEC.	- SEC.	X	-	-	-	-	-	-	-	-	-	✳	-
4A *	6X40	✳	0	✳	-	4	- SEC.	- SEC.	X	-	-	-	-	-	-	-	-	-	✳	-
4B *	6X40	✳	0	✳	-	4	- SEC.	- SEC.	X	-	-	-	-	-	-	-	-	-	✳	-
7A *	6X40	✳	0	✳	-	7	- SEC.	- SEC.	X	-	-	-	-	-	-	-	-	-	✳	-

✳ Video Detection Zone

3 Phase Fully Actuated (Raleigh Signal System)

NOTES

1. Refer to "Roadway Standard Drawings NCDOT" dated January 2018 and "Standard Specifications for Roads and Structures" dated January 2018.
2. Do not program signal for late night flashing operation unless otherwise directed by the Engineer.
3. The order of Phase 4+7 and Phase 8 may be reversed.
4. Reposition existing signal heads numbered 21, 22, and 71.
5. Set all detector units to presence mode.
6. Omit "WALK" and flashing "DON'T WALK" with no pedestrian calls.
7. Program pedestrian heads to countdown the flashing "Don't Walk" time only.
8. Phase 8 pedestrian timing is designed as a 2 stage crossing. The FDW time shown is only intended to get a pedestrian to/from the median during a single crossing. Install R10-3d signs as appropriate.
9. Locate new cabinet so as not to obstruct sight distance of vehicles turning right on red.
10. This intersection uses video detection. Install detectors according to the manufacturer's instructions to achieve the desired detection.
11. Maximum times shown in timing chart are for free-run operation only. Coordinated signal system timing values supersede these values.

PHASING DIAGRAM DETECTION LEGEND

- DETECTED MOVEMENT
- UNDETECTED MOVEMENT (OVERLAP)
- UNSIGNALIZED MOVEMENT
- PEDESTRIAN MOVEMENT

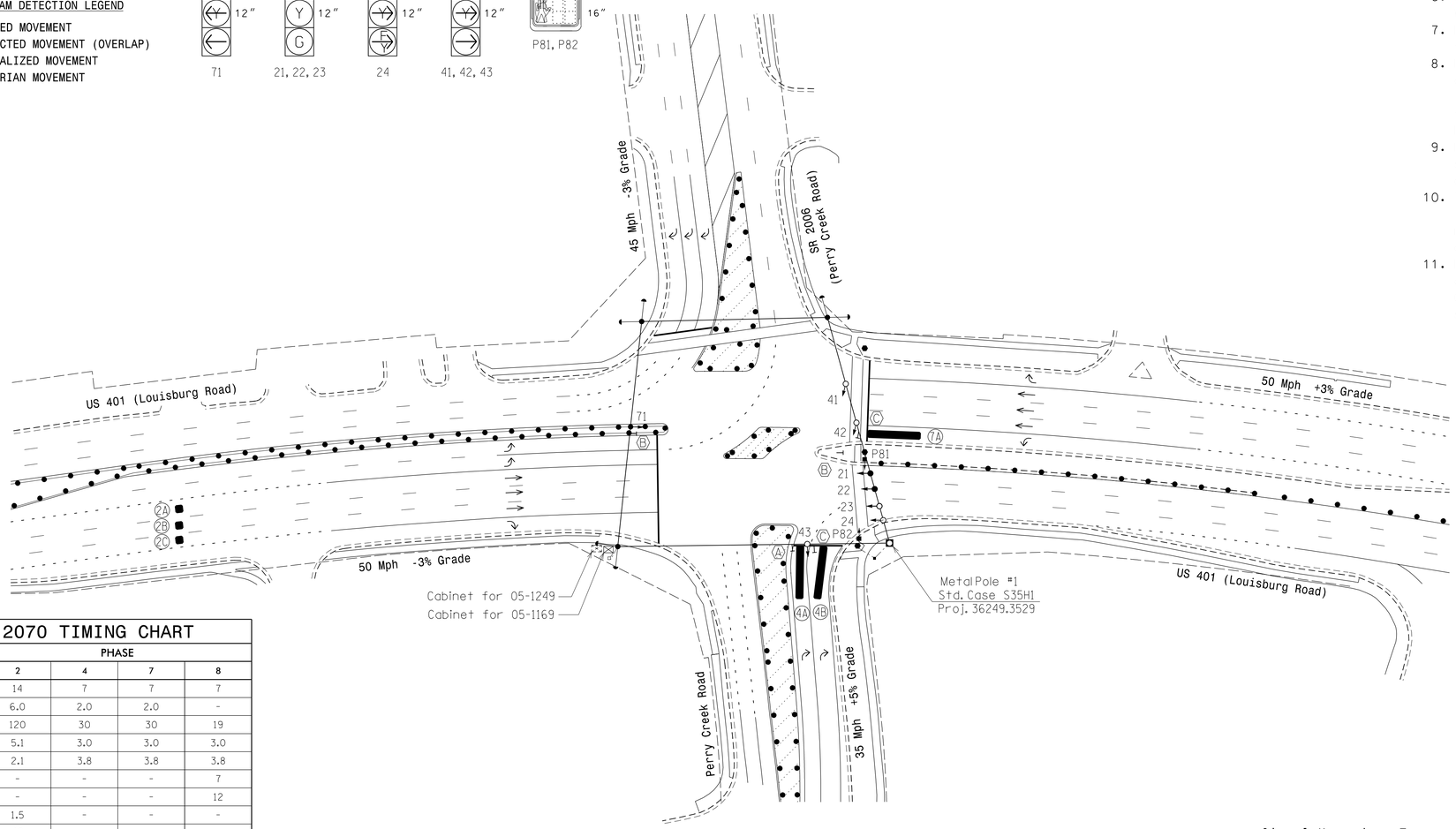

LEGEND

PROPOSED		EXISTING
	Traffic Signal Head	
	Modified Signal Head	N/A
	Sign	
	Pedestrian Signal Head	
	Signal Pole with Guy	
	Signal Pole with Sidewalk Guy	
	Inductive Loop Detector	
	Controller & Cabinet	
	Junction Box	
	2-in Underground Conduit	
N/A	Right of Way	
	Directional Arrow	
	Type II Signal Pedestal	
N/A	Curb Ramp	
DD	Directional Drill	N/A
	Metal Strain Pole	
	Video Detection Zone	
	Construction Zone	
	Construction Zone Drums	
A	No Left Turn Sign (R3-2)	A
B	No U-Turn Sign (R3-4)	B
C	"NO TURN ON RED" Sign (R10-11)	C

SE-PAC 2070 TIMING CHART

FEATURE	PHASE 2	4	7	8
Min Green *	14	7	7	7
Passage Gap *	6.0	2.0	2.0	-
Maximum Green *	120	30	30	19
Yellow Change	5.1	3.0	3.0	3.0
Red Clear	2.1	3.8	3.8	3.8
Walk *	-	-	-	7
Pedestrian Clear	-	-	-	12
Added Initial *	1.5	-	-	-
Maximum Initial *	40	-	-	-
Time Before Reduction *	20	-	-	-
Time To Reduce *	40	-	-	-
Minimum Gap	3.0	-	-	-
Recall Mode	MIN RECALL	-	-	-
Vehicle Call Memory	LOCK	NON-LOCK	NON-LOCK	NON-LOCK
Dual Entry	-	ON	ON	-
Simultaneous Gap	ON	ON	ON	ON

* These values may be field adjusted. Do not adjust Min Green and Extension times for phase 2 lower than what is shown. Min Green for all other phases should not be lower than 4 seconds.

Signal Upgrade - Temporary Design (TMP Phase I-B)

DOCUMENT NOT CONSIDERED FINAL UNLESS ALL SIGNATURES COMPLETED

AECOM
NC Firm License No.: F-0342
5438 Wade Park Boulevard
Suite 200 Raleigh, NC 27607
Phone: 919-461-1100

Prepared for the Offices of: Transportation Mobility and Safety Division, Signal Design Section, Department of Transportation, State of North Carolina
750 N.Greenfield Pkwy,Garner,NC 27529

US 401 NB (Louisburg Road) at Perry Creek Road

Division 5 | Wake County | Raleigh

PLAN DATE: Jan 2023 | REVIEWED BY: F.A. Campbell
PREPARED BY: H.M. Surti | REVIEWED BY:

SCALE 0 50 1"=50'

REVISIONS	INIT.	DATE

SEAL
NORTH CAROLINA PROFESSIONAL SEAL 034481 ENGINEER HEMANG M. SURTI

DocuSigned by: Hemang M. Surti 1/24/2023
AF1B9B0E1A6481...

SIG. INVENTORY NO. 05-1169T

1/24/2023
pw://aecomonline.pw.bentley.com:AECOM_DS21_NA_2020\Documents\60609754\U-5748 Ligon Mill\900-CAD GIS\910_CAD\70_NCDOT_TIP\Traffic\Signals\Design\Signals\0511697_sig_dsn_2022XXX.dgn
michael.cavenaugh

DocuSign Envelope ID: EE0A9FB1-617B-4D0E-A869-87C1A84AA294

PROJECT REFERENCE NO.	SHEET NO.
U-5748	Sig. 4.1

18 CHANNEL CONFLICT MONITOR PROGRAMMING DETAIL

(remove jumpers and set switches as shown)

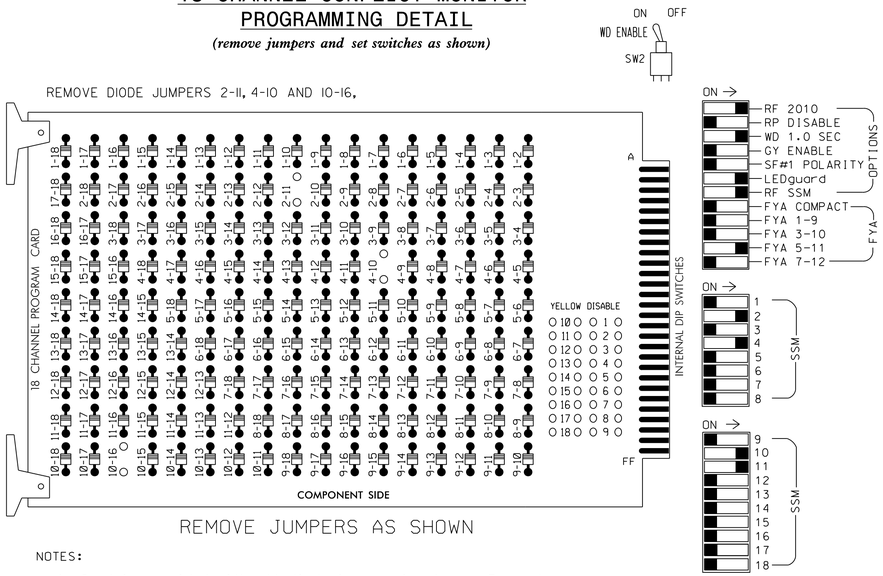

■ = DENOTES POSITION OF SWITCH

NOTES:

1. Card is provided with all diode jumpers in place. Removal of any jumper allows its channels to run concurrently.
2. Ensure jumpers SEL2-SEL5 and SEL9 are present on the monitor board.
3. Ensure that Red Enable is active at all times during normal operation.
4. Connect serial cable from conflict monitor to comm. port 1 of 2070 controller. Ensure conflict monitor communicates with 2070.

NOTES

1. To prevent "flash-conflict" problems, insert red flash program blocks for all unused vehicle load switches in the output file. The installer shall verify that signal heads flash in accordance with the Signal Plans.
2. Program controller to start up in phase 2 green.
3. Enable simultaneous gap-out feature, on controller unit, for all phases.
4. Program phases 4 and 7, on controller unit, for dual entry.
5. Program phase 2, on controller unit, for volume density operation.
6. The cabinet and controller are part of the Raleigh Signal System.

EQUIPMENT INFORMATION

CONTROLLER.....2070LX
CABINET.....332 W/ AUX
SOFTWARE.....SE-PAC2070
CABINET MOUNT.....BASE
OUTPUT FILE POSITIONS...18 WITH AUX. OUTPUT FILE
LOAD SWITCHES USED.....S2,S5,S12,AUX S2,AUX S4
PHASES USED.....2,4,7*,8PED
OVERLAP "A".....NOT USED
OVERLAP "B".....**
OVERLAP "C".....**
OVERLAP "D".....NOT USED

* Phase used for timing purposes only.
** See Sheet 2 for overlap programming.

SIGNAL HEAD HOOK-UP CHART

LOAD SWITCH NO.	S1	S2	S3	S4	S5	S6	S7	S8	S9	S10	S11	S12	AUX S1	AUX S2	AUX S3	AUX S4	AUX S5	AUX S6
CMU CHANNEL NO.	1	2	13	3	4	14	5	6	15	7	8	16	9	10	17	11	12	18
PHASE	1	2	2 PED	3	4	4 PED	5	6	6 PED	7	8	8 PED	OLA	OLB	SPARE	OLC	OLD	SPARE
SIGNAL HEAD NO.	NU	21,22, 23	NU	NU	41,42, 43	NU	NU	NU	NU	NC	NU	P81, P82	NU	71	NU	24★	NU	NU
RED		128			101											A114		
YELLOW		129																
GREEN		130																
RED ARROW														A124				
YELLOW ARROW					102									A125		A115		
FLASHING YELLOW ARROW																A116		
GREEN ARROW					103									A126				
✋												104						
🚶												106						

NU = Not Used
NC = Not Connected
★ See pictorial of head wiring in detail this sheet.

FYA SIGNAL WIRING DETAIL

(wire signal head as shown)

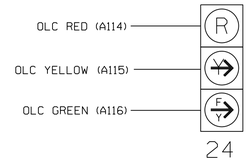

NOTE

1. See sheet 2 for Protected & Permissive Phases programming.

INPUT FILE POSITION LAYOUT

(front view)

		1	2	3	4	5	6	7	8	9	10	11	12	13	14
FILE "I"	U	SLOT EMPTY	SLOT EMPTY	SLOT EMPTY	SLOT EMPTY	SLOT EMPTY	SLOT EMPTY	SLOT EMPTY	SLOT EMPTY	SLOT EMPTY	SLOT EMPTY	SLOT EMPTY	SLOT EMPTY	NOT USED	FS DC ISOLATOR
	L													Ø8 PED DC ISOLATOR	ST DC ISOLATOR
FILE "J"	U	SLOT EMPTY	SLOT EMPTY	SLOT EMPTY	SLOT EMPTY	SLOT EMPTY	SLOT EMPTY	SLOT EMPTY	SLOT EMPTY	SLOT EMPTY	SLOT EMPTY	SLOT EMPTY	SLOT EMPTY	SLOT EMPTY	SLOT EMPTY
	L														

EX.: 1A, 2A, ETC. = LOOP NO.'S

FS = FLASH SENSE
ST = STOP TIME

INPUT FILE CONNECTION & PROGRAMMING CHART

LOOP NO.	LOOP TERMINAL	INPUT FILE POS.	PIN NO.	DETECTOR NO.	NEMA PHASE	DELAY TIME	EXTEND (STRETCH) TIME
PED PUSH BUTTONS							
P81,P82	TB8-8,9	I13L	70	PED 8	8 PED		

NOTE:
INSTALL DC ISOLATORS IN INPUT FILE SLOTS I13.

INPUT FILE POSITION LEGEND: J2L
FILE J
SLOT 2
LOWER

SPECIAL DETECTOR NOTE

Install a video detection system for vehicle detection. Perform installation according to manufacturer's directions and NCDOT engineer-approved mounting locations to accomplish the detection schemes shown on the Signal Design Plans.

COUNTDOWN PEDESTRIAN SIGNAL OPERATION

Countdown Ped Signals are required to display timing only during Ped Clearance Interval. Consult Ped Signal Module user's manual for instructions on selecting this feature.

THIS ELECTRICAL DETAIL IS FOR
THE SIGNAL DESIGN: 05-1169T
DESIGNED: Jan 2023
SEALED: 1/24/2023
REVISED:

AECOM
NC Firm License No.: F-0342
5438 Wade Park Boulevard
Suite 200 Raleigh, NC 27607
Phone: 919-461-1100

Temporary Design (TMP Phase I-B)
Electrical Detail - Sheet 1 of 3

DOCUMENT NOT CONSIDERED FINAL UNLESS ALL SIGNATURES COMPLETED

ELECTRICAL AND PROGRAMMING DETAILS FOR:

Prepared for the Offices of:
NC Department of Transportation Mobility and Safety Division Traffic Engineering & Signals Management Section
750 N.Greenfield Pkwy,Garner,NC 27529

US 401 NB (Louisburg Road)
at
Perry Creek Road

Division 5 Wake County Raleigh

PLAN DATE:	Jan 2023	REVIEWED BY:	H.M. Surti
PREPARED BY:	A. Ravipati	REVIEWED BY:	

REVISIONS	INIT.	DATE

SEAL
NORTH CAROLINA PROFESSIONAL SEAL 034481 ENGINEER HEMANG M. SURTI

DocuSigned by: Hemang M. Surti 1/24/2023
A5F1B0D0C7A54A1...

SIG. INVENTORY NO. 05-1169T

1/24/2023
pw://aecom-na-pw.bentley.com:AECOM_US21_NA_2020\Documents\60609754-U-5748 Ligon Mill\900-CAD GIS\910_CAD\470_NCDOT_TIP\Traffic\Signals\Design\Signals\Electrical Details_2022\05-1169T_sm_ele_2022XXXX.dgn
michael.cavenaugh

DocuSign Envelope ID: EE0A9FB1-617B-4D0E-A869-87C1A84AA294

PROJECT REFERENCE NO.	SHEET NO.
U-5748	Sig. 4.2

FLASHING YELLOW ARROW OVERLAP AND PROTECTED/PERMISSIVE SEQUENCE PROGRAMMING FOR OVERLAPS B & C

1. From Main Menu select [4 - UNIT DATA]
2. From UNIT DATA Submenu select [3 - OVERLAP DATA]

Use Up/Dn/Left/Right keys to position cursor on the desired Overlap. Use the NEXT key to select the overlap type. Press the ENT key and then program as per the Overlap screen(s) shown.

```
OVERLAP DATA

   A: ---   E: ---   I: ---   M: ---
   B: STD   F: ---   J: ---   N: ---
   C: FYA   G: ---   K: ---   O: ---
   D: ---   H: ---   L: ---   P: ---

 PREV/NEXT TO CYCLE
```

OVERLAP B

Use Up/Dn/Left/Right keys to position cursor on Overlap 'B', use the NEXT key to select 'STD', then press ENT

```
OVERLAP - B       12345678 90123456
         PARENTS: 00000011 00000000
     +GRN PHASES: 00000000 00000000
     -G/Y PHASES: 00000000 00000000
     -PED PHASES: 00000000 00000000
 TRAIL GREEN STANDARD:   0  YEL/10:  40
 TRAIL GREEN  PREEMPT:   0  YEL/10:  20
```

Press ESC

OVERLAP C

Use Up/Dn/Left/Right keys to position cursor on Overlap 'C', use the NEXT key to select 'FYA', then press ENT

```
FYA OVERLAP - C          DELAY/10:   0
       PHASES..12345678 90123456
  PERM PHASES: 01000000 00000000
  PROT PHASES: 00100000 00000000
  -PED PHASES: 00000000 00000000
     OVERLAPS..ABCDEFGH IJKLMNOP
PERM OVERLAPS: 00x00000 00000000
PROT OVERLAPS: 00x00000 00000000
```

NOTICE DELAY/10 = 0

Notice PROT PHASE 3

END OVERLAP PROGRAMMING

INIT & N.A. RESP PROGRAMMING DETAIL

1. From Main Menu select [3 - PHASE DATA]
2. From PHASE DATA Submenu select [4 - INIT & N.A RESP]

```
PHASE......1...2...3...4...5...6...7...8
 INITIAL   0   4   0   1   0   0   1   1
 NA RESP   0   1   0   2   0   0   0   0

CODES.....0....1....2....3....4....5...6
 INITL  NONE INACT RED  YEL  GRN  DRK G/DW
 NA RSP NONE  NA1  NA2  1&2  ---  --- ---
                                      ***
```

INIT & N.A. RESP PROGRAMMING COMPLETE

THIS ELECTRICAL DETAIL IS FOR
THE SIGNAL DESIGN: 05-1169T
DESIGNED: Jan 2023
SEALED: 1/24/2023
REVISED:

Temporary Design (TMP Phase I-B)
Electrical Detail - Sheet 2 of 3

DOCUMENT NOT CONSIDERED FINAL UNLESS ALL SIGNATURES COMPLETED

AECOM
NC Firm License No.: F-0342
5438 Wade Park Boulevard
Suite 200 Raleigh, NC 27607
Phone: 919-461-1100

ELECTRICAL AND PROGRAMMING DETAILS FOR:

Prepared for the Offices of:
Transportation Mobility and Safety Division
STATE OF NORTH CAROLINA DEPARTMENT OF TRANSPORTATION
ITS & Signals Management Section
750 N.Greenfield Pkwy,Garner,NC 27529

US 401 NB (Louisburg Road)
at
Perry Creek Road

Division 5 | Wake County | Raleigh

PLAN DATE:	Jan 2023	REVIEWED BY:	H.M. Surti
PREPARED BY:	A. Ravipati	REVIEWED BY:	

REVISIONS	INIT.	DATE

SEAL
NORTH CAROLINA PROFESSIONAL SEAL 034481 ENGINEER HEMANG M. SURTI

DocuSigned by: Hemang M. Surti 1/24/2023
AF1DB8BA7A5A481...

SIG. INVENTORY NO. 05-1169T

1/24/2023
pw:\\aecom-na-pw.bentley.com:AECOM_DS21_NA_2020\Documents\60609754-U-5748 Ligon Mill\900-CAD GIS\910_CAD\70_NCDOT_TIP\Traffic\Signals\Design\Signals\Electrical Details.2022\05116ST_sm.ale_2022XXXX.dgn
michael.cavenaugh

DocuSign Envelope ID: EE0A9FB1-617B-4D0E-A869-87C1A84AA294

PROJECT REFERENCE NO.	SHEET NO.
U-5748	Sig. 4.3

SE-PAC2070 CONTROLLER RING CONFIGURATION DETAIL

(program controller as shown below)

NOTE:
BEFORE PROGRAMMING CONTROLLER, BE SURE TO LOAD DEFAULT PARAMETERS.

FROM MAIN MENU PRESS 4 (UNIT DATA)

```
UNIT DATA
1- STARTUP & MISC        6- SEQUENCES
2- REMOTE FLASH          7- PORT 1/ITS DATA
3- OVERLAP DATA          8- I/O MISC
4- PEER-TO-PEER          9- OUTPUT MAPPING
5- RING STRUCTURE        B-BANK SELECTION
                         C-COPY BANK
'+' DENOTES BANKABLE UNIT DATA   [1]
```

```
RING STRUCTURES PHASE - 1

     RING: 1   NXT PHASE: 2
    PHASES:  123456789 0123456789 01234
COMPATIBLE:  x00011000 0000000000 00000

 UP/DOWN TO SCROLL              E-EDIT
```

```
RING STRUCTURES PHASE - 2

     RING: 1   NXT PHASE: 3
    PHASES:  123456789 0123456789 01234
COMPATIBLE:  0x0011000 0000000000 00000

 UP/DOWN TO SCROLL              E-EDIT
```

```
RING STRUCTURES PHASE - 3

     RING: 1   NXT PHASE: 4
    PHASES:  123456789 0123456789 01234
COMPATIBLE:  00x000110 0000000000 00000

 UP/DOWN TO SCROLL              E-EDIT
```

```
RING STRUCTURES PHASE - 4

     RING: 1   NXT PHASE: 8
    PHASES:  123456789 0123456789 01234
COMPATIBLE:  000x00100 0000000000 00000

 UP/DOWN TO SCROLL              E-EDIT
```

```
RING STRUCTURES PHASE - 5

     RING: 2   NXT PHASE: 6
    PHASES:  123456789 0123456789 01234
COMPATIBLE:  1100x0000 0000000000 00000

 UP/DOWN TO SCROLL              E-EDIT
```

```
RING STRUCTURES PHASE - 6

     RING: 2   NXT PHASE: 7
    PHASES:  123456789 0123456789 01234
COMPATIBLE:  11000x000 0000000000 00000

 UP/DOWN TO SCROLL              E-EDIT
```

```
RING STRUCTURES PHASE - 7

     RING: 2   NXT PHASE: 5
    PHASES:  123456789 0123456789 01234
COMPATIBLE:  000100x00 0000000000 00000

 UP/DOWN TO SCROLL              E-EDIT
```

```
RING STRUCTURES PHASE - 8

     RING: 1   NXT PHASE: 1
    PHASES:  123456789 0123456789 01234
COMPATIBLE:  0000000x0 0000000000 00000

 UP/DOWN TO SCROLL              E-EDIT
```

end of programming

RING CONFIGURATION NOTE:

PROGRAM THE CONTROLLER TO FOLLOW THE SEQUENCE SHOWN BELOW

RING 1	NOT USED	∅2	NOT USED	∅4	∅8
RING 2	NOT USED	NOT USED	∅7	NOT USED	
			BARRIER	BARRIER	

THIS ELECTRICAL DETAIL IS FOR
THE SIGNAL DESIGN: 05-1169T
DESIGNED: Jan 2023
SEALED: 1/24/2023
REVISED:

Temporary Design (TMP Phase I-B)
Electrical Detail - Sheet 3 of 3

DOCUMENT NOT CONSIDERED FINAL UNLESS ALL SIGNATURES COMPLETED

AECOM
NC Firm License No.: F-0342
5438 Wade Park Boulevard
Suite 200 Raleigh, NC 27607
Phone: 919-461-1100

ELECTRICAL AND PROGRAMMING DETAILS FOR:

Prepared for the Offices of:
Mobility and Safety Division
STATE OF NORTH CAROLINA
DEPARTMENT OF TRANSPORTATION
ITS Transportation & Signals Management Section
750 N.Greenfield Pkwy,Garner,NC 27529

US 401 NB (Louisburg Road)
at
Perry Creek Road

Division 5 | Wake County | Raleigh

PLAN DATE:	Jan 2023	REVIEWED BY:	H.M. Surti
PREPARED BY:	A. Ravipati	REVIEWED BY:	

REVISIONS	INIT.	DATE

SEAL
NORTH CAROLINA PROFESSIONAL SEAL 034481 ENGINEER HEMANG M. SURTI

DocuSigned by:
Hemang M. Surti 1/24/2023
A6120B0A7A5A4A1...

SIG. INVENTORY NO. 05-1169T

1/24/2023
pw:\\aecom-na-pw.bentley.com:AECOM_DS21_NA_20204\Documents\60609754-U-5748 Ligon Mill\900-CAD GIS\910_CAD\70_NCDOT_TIP\Traffic\Signals\Design\Signals\Electrical Details_2022\05-1169T_sm.ele_2022XXXX.dgn
michael.cavenaugh

DocuSign Envelope ID: EE0A9FB1-617B-4D0E-A869-87C1A84AA294

PROJECT REFERENCE NO.	SHEET NO.
U-5748	Sig. 5.0

PHASING DIAGRAM

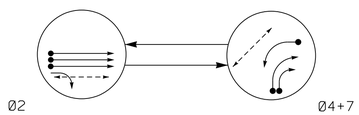

PHASING DIAGRAM DETECTION LEGEND

- DETECTED MOVEMENT
- UNDETECTED MOVEMENT (OVERLAP)
- UNSIGNALIZED MOVEMENT
- PEDESTRIAN MOVEMENT

TABLE OF OPERATION

SIGNAL FACE	PHASE Ø2	PHASE Ø4+7	FLASH
21, 22, 23	G	R	Y
24	F	R	Y
41, 42, 43	R	→	R
71	R	←	R
P21, P22	W	DW	DRK
P41, P42	DW	W	DRK

SE-PAC 2070 LOOP & DETECTOR UNIT INSTALLATION CHART

INDUCTIVE LOOPS						DETECTOR PROGRAMMING														
							TIMING		OPERATION MODE									STATUS	
LOOP NO.	SIZE (ft)	TURNS	DIST. FROM STOPBAR (ft)	NEW	EXISTING	ASSIGNED PHASE	DELAY	EXTEND (STRETCH)	0 VEHICLE	1 PEDESTRIAN	2 1 CALL	3 STOP A	4 STOP B	5 PROT/PER LEFT	6 PROT/PER THROUGH	7 AND	SWITCH SYSTEM LOOPS	NEW	EXISTING
2A	6X6	5	355	X	-	2	- SEC.	- SEC.	X	-	-	-	-	-	-	-	-	X	-
2B	6X6	5	355	X	-	2	- SEC.	- SEC.	X	-	-	-	-	-	-	-	-	X	-
2C	6X6	5	355	X	-	2	- SEC.	- SEC.	X	-	-	-	-	-	-	-	-	X	-
4A	6X40	2-4-2	0	X	-	4	- SEC.	- SEC.	X	-	-	-	-	-	-	-	-	X	-
4B	6X40	2-4-2	0	X	-	4	- SEC.	- SEC.	X	-	-	-	-	-	-	-	-	X	-
7A	6X40	2-4-2	0	X	-	7	- SEC.	- SEC.	X	-	-	-	-	-	-	-	-	X	-

2 Phase
Fully Actuated
(Raleigh Signal System)

NOTES

1. Refer to "Roadway Standard Drawings NCDOT" dated January 2018 and "Standard Specifications for Roads and Structures" dated January 2018.
2. Do not program signal for late night flashing operation unless otherwise directed by the Engineer.
3. Install backplate for signal head numbered 71.
4. Set all detector units to presence mode.
5. Omit "WALK" and flashing "DON'T WALK" with no pedestrian calls.
6. Program pedestrian heads to countdown the flashing "Don't Walk" time only.
7. Maximum times shown in timing chart are for free-run operation only. Coordinated signal system timing values supersede these values.

SIGNAL FACE I.D.

All Heads L.E.D.

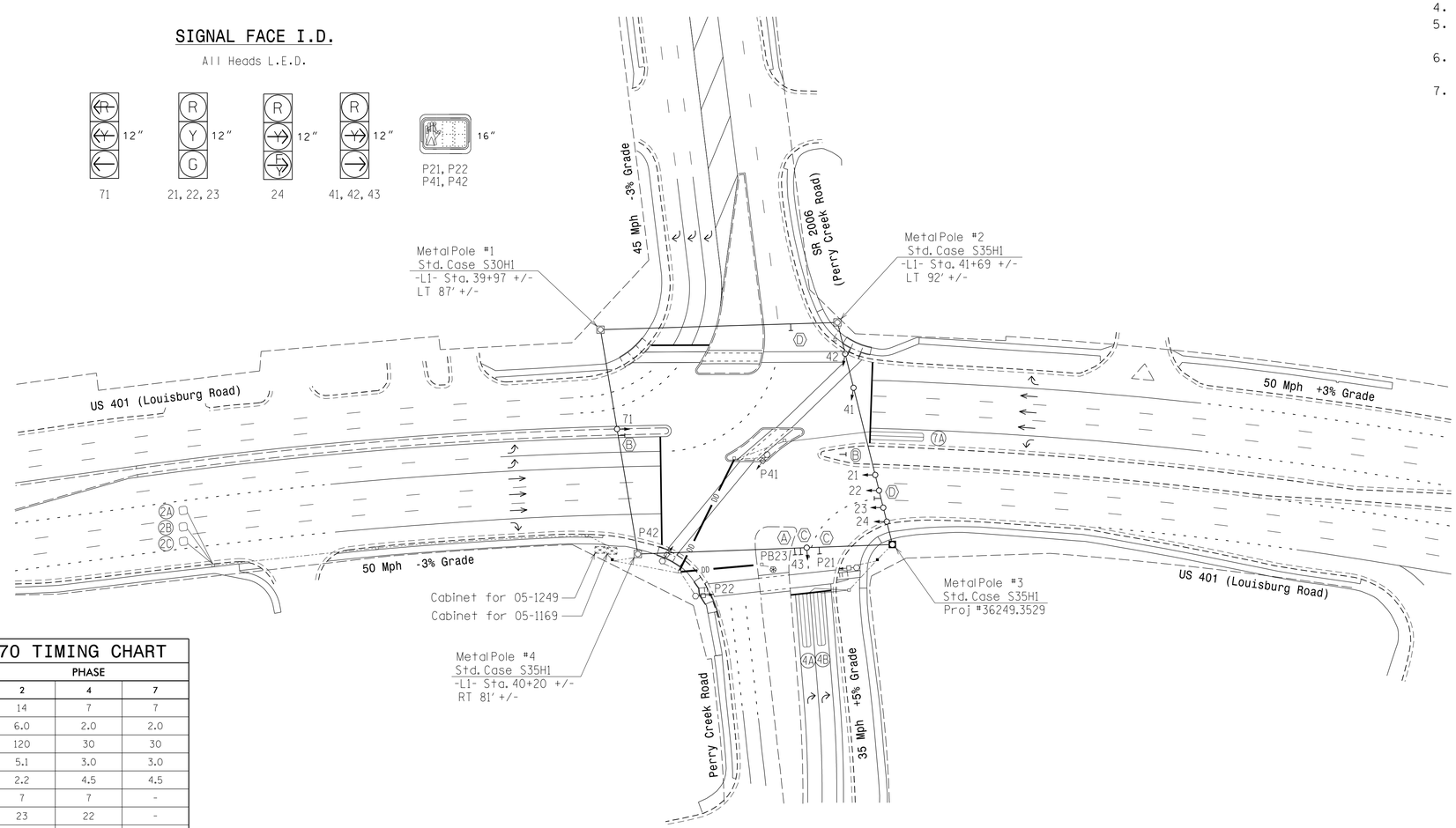

LEGEND

PROPOSED		EXISTING
	Traffic Signal Head	
	Modified Signal Head	N/A
	Sign	
	Pedestrian Signal Head	
	Signal Pole with Guy	
	Signal Pole with Sidewalk Guy	
	Inductive Loop Detector	
	Controller & Cabinet	
	Junction Box	
	2-in Underground Conduit	
N/A	Right of Way	
	Directional Arrow	
	Type I Pushbutton Post	
	Type II Signal Pedestal	
N/A	Curb Ramp	
DD	Directional Drill	N/A
	Metal Strain Pole	
A	No Left Turn Sign (R3-2)	A
B	No U-Turn Sign (R3-4)	B
C	"NO TURN ON RED" Sign (R10-11)	C
D	Street Name Sign By Others (D3-1)	D

SE-PAC 2070 TIMING CHART

FEATURE	PHASE 2	PHASE 4	PHASE 7
Min Green *	14	7	7
Passage Gap *	6.0	2.0	2.0
Maximum Green *	120	30	30
Yellow Change	5.1	3.0	3.0
Red Clear	2.2	4.5	4.5
Walk *	7	7	-
Pedestrian Clear	23	22	-
Added Initial *	1.5	-	-
Maximum Initial *	40	-	-
Time Before Reduction *	20	-	-
Time To Reduce *	40	-	-
Minimum Gap	3.0	-	-
Recall Mode	MIN RECALL	-	-
Vehicle Call Memory	LOCK	NON-LOCK	NON-LOCK
Dual Entry	-	ON	ON
Simultaneous Gap	ON	ON	ON

* These values may be field adjusted. Do not adjust Min Green and Extension times for phase 2 lower than what is shown. Min Green for all other phases should not be lower than 4 seconds.

Signal Upgrade - Final Design

AECOM
NC Firm License No.: F-0342
5438 Wade Park Boulevard
Suite 200 Raleigh, NC 27607
Phone: 919-461-1100

Prepared for the Offices of:
Transportation Mobility and Safety Division
Signal Design Section
750 N.Greenfield Pkwy,Garner,NC 27529

US 401 NB (Louisburg Road) at Perry Creek Road

Division 5 Wake County Raleigh

PLAN DATE:	Jan 2023	REVIEWED BY:	F.A. Campbell
PREPARED BY:	H.M. Surti	REVIEWED BY:	

SCALE 0 50 1"=50'

REVISIONS	INIT.	DATE

DOCUMENT NOT CONSIDERED FINAL UNLESS ALL SIGNATURES COMPLETED

SEAL
NORTH CAROLINA PROFESSIONAL SEAL 034481 ENGINEER HEMANG M. SURTI

DocuSigned by:
Hemang M. Surti
1/24/2023

SIG. INVENTORY NO. 05-1169

1/24/2023
bentleyuser-cpw.bentley.com:AECOM_DS21_NA_2020\Documents\60609754-U-5748 Ligon Mill\900-CAD GIS\910_CAD\70_NCDOT_TIP\Traffic\Signals\Designs\Signals\051169_sig_dsn_2022XXXX.dgn
michael.covenaugh

DocuSign Envelope ID: EE0A9FB1-617B-4D0E-A869-87C1A84AA294

PROJECT REFERENCE NO.	SHEET NO.
U-5748	Sig. 5.1

18 CHANNEL CONFLICT MONITOR PROGRAMMING DETAIL

(remove jumpers and set switches as shown)

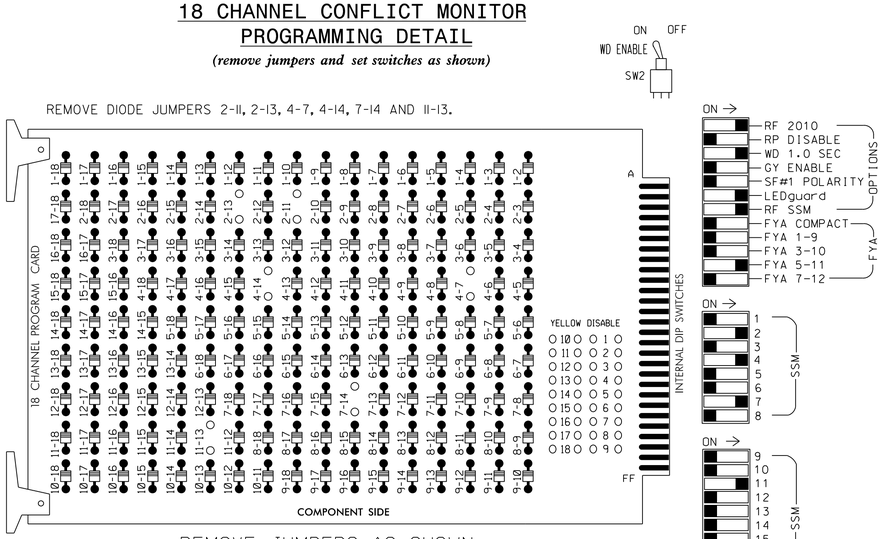

■ = DENOTES POSITION OF SWITCH

NOTES:

1. Card is provided with all diode jumpers in place. Removal of any jumper allows its channels to run concurrently.
2. Ensure jumpers SEL2-SEL5 and SEL9 are present on the monitor board.
3. Ensure that Red Enable is active at all times during normal operation.
4. Connect serial cable from conflict monitor to comm. port 1 of 2070 controller. Ensure conflict monitor communicates with 2070.

NOTES

1. To prevent "flash-conflict" problems, insert red flash program blocks for all unused vehicle load switches in the output file. The installer shall verify that signal heads flash in accordance with the Signal Plans.
2. Program controller to start up in phase 2 green.
3. Enable simultaneous gap-out feature, on controller unit, for all phases.
4. Program phases 4 and 7, on controller unit, for dual entry.
5. Program phase 2, on controller unit, for volume density operation.
6. The cabinet and controller are part of the Raleigh Signal System.

EQUIPMENT INFORMATION

CONTROLLER.....2070LX
CABINET.....332 W/ AUX
SOFTWARE.....SE-PAC2070
CABINET MOUNT.....BASE
OUTPUT FILE POSITIONS...18 WITH AUX. OUTPUT FILE
LOAD SWITCHES USED.....S2,S3,S5,S6,S10,AUX S4
PHASES USED.....2,2PED,4,4PED,7
OVERLAP "A".....NOT USED
OVERLAP "B".....NOT USED
OVERLAP "C".....*
OVERLAP "D".....NOT USED

* See Sheet 2 for Overlap programming.

SIGNAL HEAD HOOK-UP CHART

LOAD SWITCH NO.	S1	S2	S3	S4	S5	S6	S7	S8	S9	S10	S11	S12	AUX S1	AUX S2	AUX S3	AUX S4	AUX S5	AUX S6
CMU CHANNEL NO.	1	2	13	3	4	14	5	6	15	7	8	16	9	10	17	11	12	18
PHASE	1	2	2 PED	3	4	4 PED	5	6	6 PED	7	8	8 PED	OLA	OLB	SPARE	OLC	OLD	SPARE
SIGNAL HEAD NO.	NU	21,22, 23	P21, P22	NU	41,42, 43	P41, P42	NU	NU	NU	71	NU	NU	NU	NU	NU	24 ★	NU	NU
RED		128			101											A114		
YELLOW		129																
GREEN		130																
RED ARROW										122								
YELLOW ARROW					102					123						A115		
FLASHING YELLOW ARROW																A116		
GREEN ARROW					103					124								
✋			113			104												
🚶			115			106												

NU = Not Used

★ See pictorial of head wiring in detail this sheet.

FYA SIGNAL WIRING DETAIL

(wire signal head as shown)

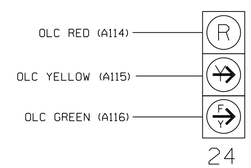

NOTE

1. See sheet 2 for Protected & Permissive Phases programming.

INPUT FILE POSITION LAYOUT

(front view)

		1	2	3	4	5	6	7	8	9	10	11	12	13	14
FILE "I"	U	SLOT EMPTY	Ø 2 2A	Ø 2 2C	SLOT EMPTY	SLOT EMPTY	Ø 4 4A	SLOT EMPTY	SLOT EMPTY	SLOT EMPTY	SLOT EMPTY	SLOT EMPTY	Ø2 PED DC ISOLATOR	SLOT EMPTY	FS DC ISOLATOR
	L		Ø 2 2B	NOT USED			Ø 4 4B						Ø4 PED DC ISOLATOR		ST DC ISOLATOR
FILE "J"	U	SLOT EMPTY	SLOT EMPTY	SLOT EMPTY	SLOT EMPTY	Ø 7 7A	SLOT EMPTY	SLOT EMPTY	SLOT EMPTY	SLOT EMPTY	SLOT EMPTY	SLOT EMPTY	SLOT EMPTY	SLOT EMPTY	SLOT EMPTY
	L					NOT USED									

EX.: 1A, 2A, ETC. = LOOP NO.'S

FS = FLASH SENSE
ST = STOP TIME

INPUT FILE CONNECTION & PROGRAMMING CHART

LOOP NO.	LOOP TERMINAL	INPUT FILE POS.	PIN NO.	DETECTOR NO.	NEMA PHASE	DELAY TIME	EXTEND (STRETCH) TIME
2A	TB2-5,6	I2U	39	3	2		
2B	TB2-7,8	I2L	43	4	2		
2C	TB2-9,10	I3U	63	5	2		
4A	TB4-9,10	I6U	41	11	4		
4B	TB4-11,12	I6L	45	12	4		
7A	TB5-5,6	J5U	57	29	7		
PED PUSH BUTTONS							
P21,P22,PB23	TB8-4,6	I12U	67	PED 2	2 PED		
P41,P42	TB8-5,6	I12L	69	PED 4	4 PED		

NOTE:
INSTALL DC ISOLATORS IN INPUT FILE SLOTS I12.

INPUT FILE POSITION LEGEND: J2L
FILE J
SLOT 2
LOWER

COUNTDOWN PEDESTRIAN SIGNAL OPERATION

Countdown Ped Signals are required to display timing only during Ped Clearance Interval. Consult Ped Signal Module user's manual for instructions on selecting this feature.

THIS ELECTRICAL DETAIL IS FOR
THE SIGNAL DESIGN: 05-1169
DESIGNED: Jan 2023
SEALED: 1/24/2023
REVISED:

AECOM
NC Firm License No.: F-0342
5438 Wade Park Boulevard
Suite 200 Raleigh, NC 27607
Phone: 919-461-1100

Final Design
Electrical Detail - Sheet 1 of 2

DOCUMENT NOT CONSIDERED FINAL UNLESS ALL SIGNATURES COMPLETED

ELECTRICAL AND PROGRAMMING DETAILS FOR:

Prepared for the Offices of:
Transportation Mobility and Safety Division
STATE OF NORTH CAROLINA DEPARTMENT OF TRANSPORTATION
ITS & Signals Management Section
750 N.Greenfield Pkwy,Garner,NC 27529

US 401 NB (Louisburg Road)
at
Perry Creek Road

Division 5 | Wake County | Raleigh

PLAN DATE:	Jan 2023	REVIEWED BY:	H.M. Surti
PREPARED BY:	A. Ravipati	REVIEWED BY:	

REVISIONS	INIT.	DATE

SEAL
NORTH CAROLINA PROFESSIONAL SEAL 034481 ENGINEER HEMANG M. SURTI

DocuSigned by: Hemang M. Surti 1/24/2023
A6128B0A7A5A481...

SIG. INVENTORY NO. 05-1169

1/24/2023
pw://aecom-na-pw.bentley.com:AECOM_DS21_NA_20204\Documents\60609754-U-5748 Ligon Mill\900-CAD GIS\910_CAD\70_NCDOT_TIP\Traffic\Signals\Design\Signals\Electrical Details_2022\051169_sm_ele_2022XXXX.dgn
michael.cavenaugh

DocuSign Envelope ID: EE0A9FB1-617B-4D0E-A869-87C1A84AA294

FLASHING YELLOW ARROW OVERLAP AND PROTECTED/PERMISSIVE SEQUENCE PROGRAMMING FOR OVERLAP C

1. From Main Menu select 4 - UNIT DATA
2. From UNIT DATA Submenu select 3 - OVERLAP DATA

Use Up/Dn/Left/Right keys to position cursor on the desired Overlap. Use the NEXT key to select the overlap type. Press the ENT key and then program as per the Overlap screen(s) shown.

```
OVERLAP DATA

   A: ---   E: ---   I: ---   M: ---
   B: ---   F: ---   J: ---   N: ---
   C: FYA   G: ---   K: ---   O: ---
   D: ---   H: ---   L: ---   P: ---

 PREV/NEXT TO CYCLE
```

OVERLAP C

Use Up/Dn/Left/Right keys to position cursor on Overlap 'C', use the NEXT key to select 'FYA', then press ENT

```
FYA OVERLAP - C          DELAY/10:   0
       PHASES..12345678 90123456
  PERM PHASES: 01000000 00000000
  PROT PHASES: 10000000 00000000
  -PED PHASES: 00000000 00000000
     OVERLAPS..ABCDEFGH IJKLMNOP
PERM OVERLAPS: 00x00000 00000000
PROT OVERLAPS: 00x00000 00000000
```

← NOTICE DELAY/10 = 0

← Notice PROT PHASE 1

END OVERLAP PROGRAMMING

INIT & N.A. RESP PROGRAMMING DETAIL

1. From Main Menu select 3 - PHASE DATA
2. From PHASE DATA Submenu select 4 - INIT & N.A RESP

```
PHASE......1...2...3...4...5...6...7...8
 INITIAL   0   4   0   1   0   0   1   0
 NA RESP   0   1   0   2   0   0   0   0

CODES.....0....1....2....3....4....5...6
 INITL  NONE INACT RED  YEL  GRN  DRK G/DW
 NA RSP NONE  NA1  NA2  1&2  ---  --- ---
                                        ***
```

INIT & N.A. RESP PROGRAMMING COMPLETE

THIS ELECTRICAL DETAIL IS FOR
THE SIGNAL DESIGN: 05-1169
DESIGNED: Jan 2023
SEALED: 1/24/2023
REVISED:

Final Design
Electrical Detail - Sheet 2 of 2

DOCUMENT NOT CONSIDERED FINAL UNLESS ALL SIGNATURES COMPLETED

ELECTRICAL AND PROGRAMMING DETAILS FOR:

Prepared for the Offices of:
Transportation Mobility and Safety Division
STATE OF NORTH CAROLINA DEPARTMENT OF TRANSPORTATION
Signals Management Section
750 N.Greenfield Pkwy,Garner,NC 27529

US 401 NB (Louisburg Road)
at
Perry Creek Road

Division 5 Wake County Raleigh

PLAN DATE:	Jan 2023	REVIEWED BY:	H.M. Surti
PREPARED BY:	A. Ravipati	REVIEWED BY:	

REVISIONS	INIT.	DATE

SEAL
NORTH CAROLINA PROFESSIONAL SEAL 034481 ENGINEER HEMANG M. SURTI

DocuSigned by:
Hemang M. Surti 1/24/2023
A1C1B0BC1C8A4A1...

SIG. INVENTORY NO. 05-1169

AECOM
NC Firm License No.: F-0342
5438 Wade Park Boulevard
Suite 200 Raleigh, NC 27607
Phone: 919-461-1100

1/24/2023
pw:\\aecom-na-pw.bentley.com:AECOM_DS21_NA_2020\Documents\60609754-U-5748 Ligon Mill\900-CAD GIS\910_CAD\70_NCDOT_TIP\Traffic\Signals\Design\Signals\Electrical Details_2022\05169_sm_ele_2022XXXX.dgn
mitchell.cavenaugh

DocuSign Envelope ID: EE0A9FB1-617B-4D0E-A869-87C1A84AA294

PROJECT REFERENCE NO.	SHEET NO.
U-5748	Sig. 6.0

PHASING DIAGRAM

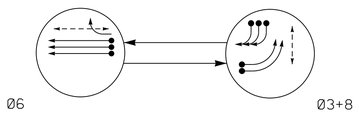

PHASING DIAGRAM DETECTION LEGEND

- DETECTED MOVEMENT
- UNDETECTED MOVEMENT (OVERLAP)
- UNSIGNALIZED MOVEMENT
- PEDESTRIAN MOVEMENT

TABLE OF OPERATION

SIGNAL FACE	PHASE Ø6	PHASE Ø3+8	FLASH
31, 32	~~R~~	~~←~~	~~R~~
61, 62, 63	G	R	Y
64	F Y	R	~~Y~~
81,82,83,84	R	→	R
P61, P62	W	DW	DRK
P81, P82	DW	W	DRK

SE-PAC 2070 LOOP & DETECTOR UNIT INSTALLATION CHART

INDUCTIVE LOOPS						DETECTOR PROGRAMMING															
							TIMING		OPERATION MODE										STATUS	
ZONE NO.	SIZE (ft)	TURNS	DIST. FROM STOPBAR (ft)	NEW	EXISTING	ASSIGNED PHASE	DELAY	EXTEND (STRETCH)	0 VEHICLE	1 PEDESTRIAN	2 1 CALL	3 STOP A	4 STOP B	5 PROTPER PASSTHR	6 PROTPER PASSTHR	7 AND	SWITCH	SYSTEM LOOPS	NEW	EXISTING
3A *	6X40	✳	0	✳	-	3	- SEC.	- SEC.	X	-	-	-	-	-	-	-	-	-	✳	-
3B *	6X40	✳	0	✳	-	3	- SEC.	- SEC.	X	-	-	-	-	-	-	-	-	-	✳	-
6A *	6X6	✳	355	✳	-	6	- SEC.	- SEC.	X	-	-	-	-	-	-	-	-	-	✳	-
6B *	6X6	✳	355	✳	-	6	- SEC.	- SEC.	X	-	-	-	-	-	-	-	-	-	✳	-
6C *	6X6	✳	355	✳	-	6	- SEC.	- SEC.	X	-	-	-	-	-	-	-	-	-	✳	-
8A *	6X40	✳	0	✳	-	8	- SEC.	- SEC.	X	-	-	-	-	-	-	-	-	-	✳	-
8B *	6X40	✳	0	✳	-	8	- SEC.	- SEC.	X	-	-	-	-	-	-	-	-	-	✳	-
8C *	6X40	✳	0	✳	-	8	- SEC.	- SEC.	X	-	-	-	-	-	-	-	-	-	✳	-

✳ Video Detection Zone

SIGNAL FACE I.D.

All Heads L.E.D.

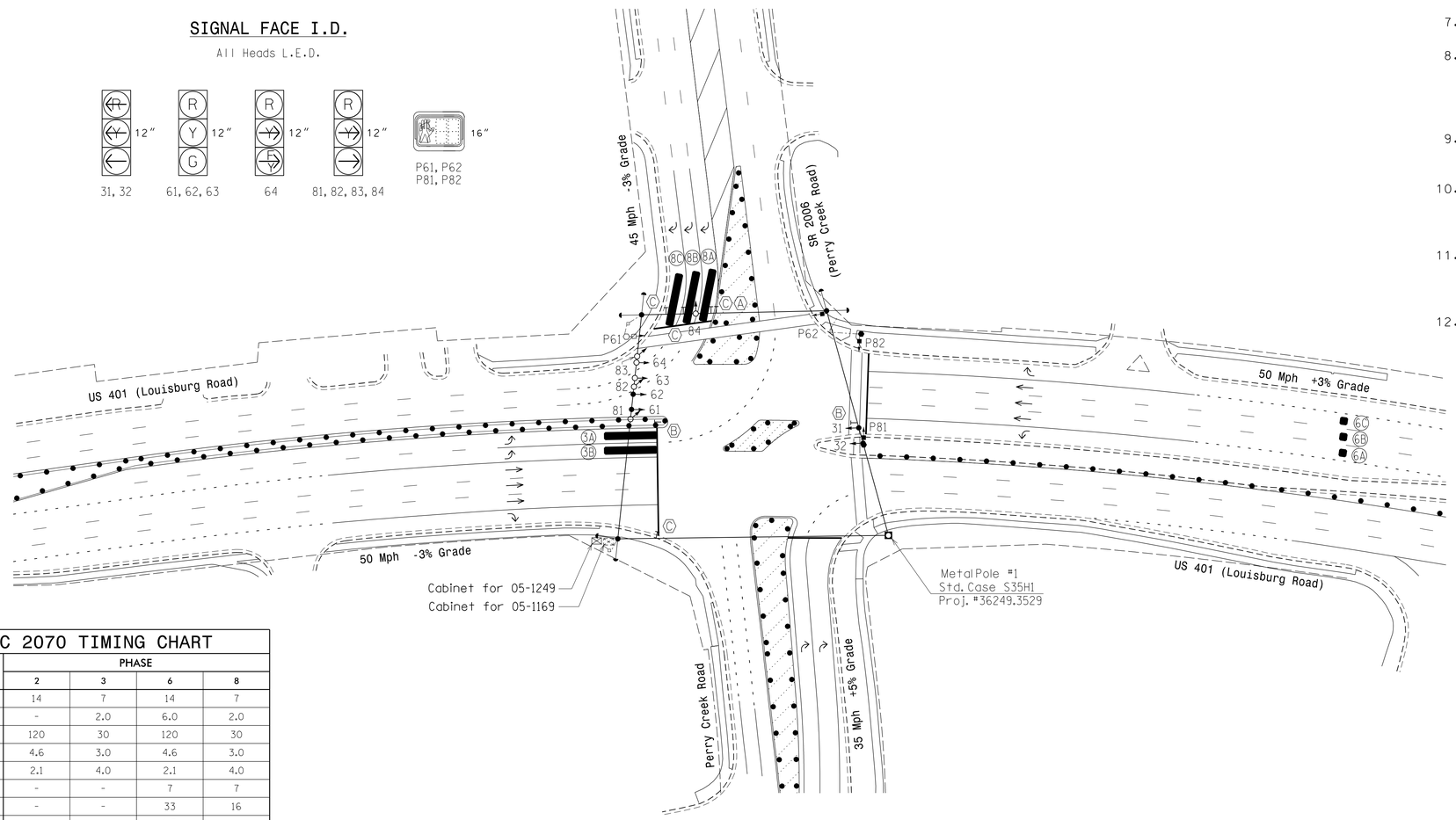

SE-PAC 2070 TIMING CHART

FEATURE	PHASE 2	PHASE 3	PHASE 6	PHASE 8
Min Green *	14	7	14	7
Passage Gap *	-	2.0	6.0	2.0
Maximum Green *	120	30	120	30
Yellow Change	4.6	3.0	4.6	3.0
Red Clear	2.1	4.0	2.1	4.0
Walk *	-	-	7	7
Pedestrian Clear	-	-	33	16
Added Initial *	-	-	1.5	-
Maximum Initial *	-	-	40	-
Time Before Reduction *	-	-	20	-
Time To Reduce *	-	-	40	-
Minimum Gap	-	-	3.0	-
Recall Mode	-	-	MIN RECALL	-
Vehicle Call Memory	-	NON-LOCK	LOCK	NON-LOCK
Dual Entry	-	ON	-	ON
Simultaneous Gap	ON	ON	ON	ON

* These values may be field adjusted. Do not adjust Min Green and Extension times for phases 2 and 6 lower than what is shown. Min Green for all other phases should not be lower than 4 seconds.

2 Phase Fully Actuated (Raleigh Signal System)

NOTES

1. Refer to "Roadway Standard Drawings NCDOT" dated January 2018 and "Standard Specifications for Roads and Structures" dated January 2018.
2. Do not program signal for late night flashing operation unless otherwise directed by the Engineer.
3. Reposition existing signal heads numbered 61 and 62.
4. Install backplates for signal heads numbered 63 and 64.
5. Set all detector units to presence mode.
6. Omit "WALK" and flashing "DON'T WALK" with no pedestrian calls.
7. Program pedestrian heads to countdown the flashing "Don't Walk" time only.
8. Phase 8 pedestrian timing is designed as a 2 stage crossing. The FDW time shown is only intended to get a pedestrian to/from the median during a single crossing. Install R10-3d signs as appropriate.
9. Locate new cabinet so as not to obstruct sight distance of vehicles turning right on red.
10. This intersection uses video detection. Install detectors according to the manufacturer's instructions to achieve the desired location.
11. Maximum times shown in timing chart are for free-run operation only. Coordinated signal system timing values supersede these values.
12. Program Phase 2 as a dummy phase for Ring 1.

LEGEND

PROPOSED		EXISTING
	Traffic Signal Head	
	Modified Signal Head	N/A
	Sign	
	Pedestrian Signal Head	
	Push Button & Sign	N/A
	Signal Pole with Guy	
	Signal Pole with Sidewalk Guy	
	Inductive Loop Detector	
	Controller & Cabinet	
	Junction Box	
	2-in Underground Conduit	
N/A	Right of Way	
	Directional Arrow	
	Type II Signal Pedestal	
N/A	Curb Ramp	
DD	Directional Drill	N/A
	Metal Strain Pole	
	Video Detection Zone	
	Construction Zone	
	Construction Zone Drums	
Ⓐ	No Left Turn Sign (R3-2)	Ⓐ
Ⓑ	No U-Turn Sign (R3-4)	Ⓑ
Ⓒ	"NO TURN ON RED" Sign (R10-11)	Ⓒ

New Installation - Temporary Design (TMP Phase I-B)

AECOM
NC Firm License No.: F-0342
5438 Wade Park Boulevard
Suite 200 Raleigh, NC 27607
Phone: 919-461-1100

Prepared for the Offices of: Transportation Mobility and Safety Division, Traffic Engineering, State of North Carolina, Department of Transportation, Signal Design Section
750 N.Greenfield Pkwy,Garner,NC 27529

SCALE 0 50 1"=50'

US 401 SB (Louisburg Road) at SR 2006 (Perry Creek Road)

Division 5 | Wake County | Raleigh

PLAN DATE: Jan 2023 | REVIEWED BY: F.A. Campbell
PREPARED BY: H.M. Surti | REVIEWED BY:

REVISIONS	INIT.	DATE

DOCUMENT NOT CONSIDERED FINAL UNLESS ALL SIGNATURES COMPLETED

SEAL
NORTH CAROLINA PROFESSIONAL SEAL 034481 ENGINEER HEMANG M. SURTI

DocuSigned by: Hemang M. Surti 1/24/2023
SIG. INVENTORY NO. 05-1249T

1/24/2023
pw://aecom-na-pw.bentley.com:AECOM_DS21_NA_2020\Documents\60609754-U-5748 Ligon Mill\900-CAD GIS\910_CAD\70_NCDOT_TIP\Traffic\Signals\Designs\Signals\05124911_sig_dsn_2022XXXX.dgn
mcmast1.cavenaugh

DocuSign Envelope ID: EE0A9FB1-617B-4D0E-A869-87C1A84AA294

PROJECT REFERENCE NO.	SHEET NO.
U-5748	Sig. 6.1

18 CHANNEL CONFLICT MONITOR PROGRAMMING DETAIL

(remove jumpers and set switches as shown)

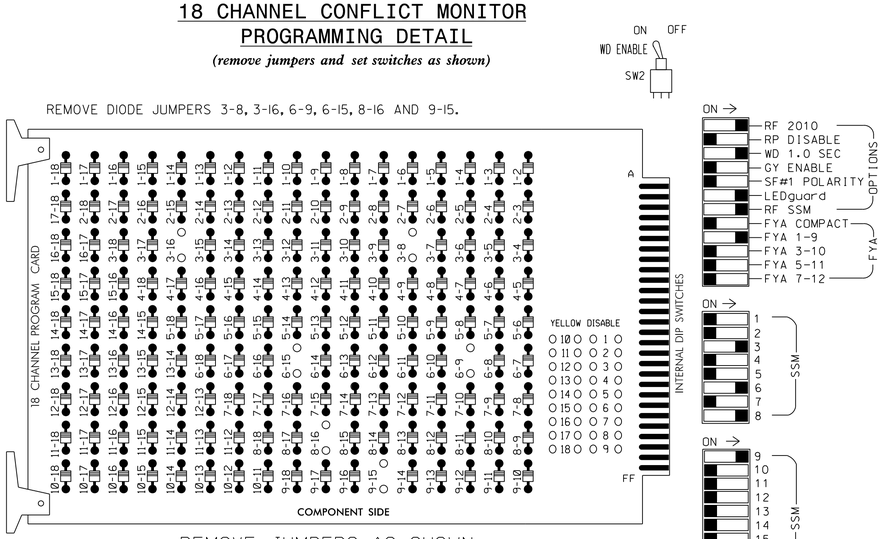

■ = DENOTES POSITION OF SWITCH

NOTES:

1. Card is provided with all diode jumpers in place. Removal of any jumper allows its channels to run concurrently.
2. Ensure jumpers SEL2-SEL5 and SEL9 are present on the monitor board.
3. Ensure that Red Enable is active at all times during normal operation.
4. Connect serial cable from conflict monitor to comm. port 1 of 2070 controller. Ensure conflict monitor communicates with 2070.

NOTES

1. To prevent "flash-conflict" problems, insert red flash program blocks for all unused vehicle load switches in the output file. The installer shall verify that signal heads flash in accordance with the Signal Plans.
2. Program controller to start up in phase 6 green.
3. Enable simultaneous gap-out feature, on controller unit, for all phases.
4. Program phases 3 and 8, on controller unit, for dual entry.
5. Program phase 6, on controller unit, for volume density operation.
6. The cabinet and controller are part of the Raleigh Signal System.

EQUIPMENT INFORMATION

CONTROLLER.....2070LX
CABINET.....332 W/ AUX
SOFTWARE.....SE-PAC2070
CABINET MOUNT.....BASE
OUTPUT FILE POSITIONS...18 WITH AUX. OUTPUT FILE
LOAD SWITCHES USED.....S4,S8,S9,S11,S12,AUX S1
PHASES USED.....2*,3,6,6PED,8,8PED
OVERLAP "A".....**
OVERLAP "B".....NOT USED
OVERLAP "C".....NOT USED
OVERLAP "D".....NOT USED

* Phase used for timing purposes only
** See sheet 2 for Overlap programming.

SIGNAL HEAD HOOK-UP CHART

LOAD SWITCH NO.	S1	S2	S3	S4	S5	S6	S7	S8	S9	S10	S11	S12	AUX S1	AUX S2	AUX S3	AUX S4	AUX S5	AUX S6
CMU CHANNEL NO.	1	2	13	3	4	14	5	6	15	7	8	16	9	10	17	11	12	18
PHASE	1	2	2 PED	3	4	4 PED	5	6	6 PED	7	8	8 PED	OLA	OLB	SPARE	OLC	OLD	SPARE
SIGNAL HEAD NO.	NU	NC	NU	31,32	NU	NU	NU	61,62, 63	P61, P62	NU	81,82, 83,84	P81, P82	64★	NU	NU	NU	NU	NU
RED								134			107		A121					
YELLOW								135										
GREEN								136										
RED ARROW				116														
YELLOW ARROW				117							108		A122					
FLASHING YELLOW ARROW													A123					
GREEN ARROW				118							109							
✋									119			110						
🚶									121			112						

NU = Not Used
NC = Not Connected
★ See pictorial of head wiring in detail this sheet.

FYA SIGNAL WIRING DETAIL

(wire signal head as shown)

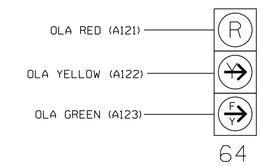

NOTE

1. See sheet 2 for Protected & Permissive Phases programming.

INPUT FILE POSITION LAYOUT

(front view)

		1	2	3	4	5	6	7	8	9	10	11	12	13	14
FILE "I"	U	SLOT EMPTY	SLOT EMPTY	SLOT EMPTY	SLOT EMPTY	SLOT EMPTY	SLOT EMPTY	SLOT EMPTY	SLOT EMPTY	SLOT EMPTY	SLOT EMPTY	SLOT EMPTY	SLOT EMPTY	Ø6 PED DC ISOLATOR	FS DC ISOLATOR
	L													Ø8 PED DC ISOLATOR	ST DC ISOLATOR
FILE "J"	U	SLOT EMPTY	SLOT EMPTY	SLOT EMPTY	SLOT EMPTY	SLOT EMPTY	SLOT EMPTY	SLOT EMPTY	SLOT EMPTY	SLOT EMPTY	SLOT EMPTY	SLOT EMPTY	SLOT EMPTY	SLOT EMPTY	SLOT EMPTY
	L														

EX.: 1A, 2A, ETC. = LOOP NO.'S

FS = FLASH SENSE
ST = STOP TIME

INPUT FILE CONNECTION & PROGRAMMING CHART

LOOP NO.	LOOP TERMINAL	INPUT FILE POS.	PIN NO.	DETECTOR NO.	NEMA PHASE	DELAY TIME	EXTEND (STRETCH) TIME
PED PUSH BUTTONS							
P61,P62	TB8-7,9	I13U	68	PED 6	6 PED		
P81,P82	TB8-8,9	I13L	70	PED 8	8 PED		

NOTE:
INSTALL DC ISOLATORS IN INPUT FILE SLOTS I13.

INPUT FILE POSITION LEGEND: J2L
FILE J
SLOT 2
LOWER

SPECIAL DETECTOR NOTE

Install a video detection system for vehicle detection. Perform installation according to manufacturer's directions and NCDOT engineer-approved mounting locations to accomplish the detection schemes shown on the Signal Design Plans.

COUNTDOWN PEDESTRIAN SIGNAL OPERATION

Countdown Ped Signals are required to display timing only during Ped Clearance Interval. Consult Ped Signal Module user's manual for instructions on selecting this feature.

THIS ELECTRICAL DETAIL IS FOR
THE SIGNAL DESIGN: 05-1249T
DESIGNED: Jan 2023
SEALED: 1/24/2023
REVISED:

AECOM
NC Firm License No.: F-0342
5438 Wade Park Boulevard
Suite 200 Raleigh, NC 27607
Phone: 919-461-1100

Temporary Design (TMP Phase I-B)
Electrical Detail - Sheet 1 of 2

DOCUMENT NOT CONSIDERED FINAL UNLESS ALL SIGNATURES COMPLETED

ELECTRICAL AND PROGRAMMING DETAILS FOR:

Prepared for the Offices of:
Transportation Mobility and Safety Division
Signals Management Section
750 N.Greenfield Pkwy,Garner,NC 27529

US 401 SB (Louisburg Road)
at
SR 2006 (Perry Creek Road)

Division 5 | Wake County | Raleigh

PLAN DATE:	Jan 2023	REVIEWED BY:	H.M. Surti
PREPARED BY:	A. Ravipati	REVIEWED BY:	

REVISIONS	INIT.	DATE

SEAL
NORTH CAROLINA PROFESSIONAL SEAL 034481 ENGINEER HEMANG M. SURTI

DocuSigned by: Hemang M. Surti AF12B8D0A7A54A1... 1/24/2023

SIG. INVENTORY NO. 05-1249T

1/24/2023
pw:\\aecom-na-pw.bentley.com:AECOM_DS21_NA_2020\Documents\60609754-U-5748 Ligon Mill\900-CAD GIS\910_CAD\70_NCDOT_TIP\Traffic\Signals\Design\Signals\Electrical Details_2022\051249T_sm_ele_2022XXXX.dgn
michael.cavanaugh

DocuSign Envelope ID: EE0A9FB1-617B-4D0E-A869-87C1A84AA294

PROJECT REFERENCE NO.	SHEET NO.
U-5748	Sig. 6.2

FLASHING YELLOW ARROW OVERLAP AND PROTECTED/PERMISSIVE SEQUENCE PROGRAMMING FOR OVERLAP A

1. From Main Menu select 4 - UNIT DATA
2. From UNIT DATA Submenu select 3 - OVERLAP DATA

Use Up/Dn/Left/Right keys to position cursor on the desired Overlap. Use the NEXT key to select the overlap type. Press the ENT key and then program as per the Overlap screen(s) shown.

```
OVERLAP DATA

   A: FYA   E: ---   I: ---   M: ---
   B: ---   F: ---   J: ---   N: ---
   C: ---   G: ---   K: ---   O: ---
   D: ---   H: ---   L: ---   P: ---

 PREV/NEXT TO CYCLE
```

OVERLAP A

Use Up/Dn/Left/Right keys to position cursor on Overlap 'A', use the NEXT key to select 'FYA', then press ENT

```
FYA OVERLAP - A          DELAY/10:   0
      PHASES..12345678 90123456
  PERM PHASES: 00000100 00000000
  PROT PHASES: 00001000 00000000
  -PED PHASES: 00000000 00000000
     OVERLAPS..ABCDEFGH IJKLMNOP
PERM OVERLAPS: x0000000 00000000
PROT OVERLAPS: x0000000 00000000
```

← NOTICE DELAY/10 = 0

← Notice PROT PHASE 5

END OVERLAP PROGRAMMING

INIT & N.A. RESP PROGRAMMING DETAIL

1. From Main Menu select 3 - PHASE DATA
2. From PHASE DATA Submenu select 4 - INIT & N.A RESP

```
PHASE......1...2...3...4...5...6...7...8
 INITIAL   0   0   1   0   0   4   0   1
 NA RESP   0   0   0   0   0   1   0   0

CODES.....0....1....2....3....4....5...6
 INITL  NONE INACT RED  YEL  GRN  DRK G/DW
 NA RSP NONE  NA1  NA2  1&2  ---  --- ---
                                      ***
```

INIT & N.A. RESP PROGRAMMING COMPLETE

THIS ELECTRICAL DETAIL IS FOR
THE SIGNAL DESIGN: 05-1249T
DESIGNED: Jan 2023
SEALED: 1/24/2023
REVISED:

Temporary Design (TMP Phase I-B)
Electrical Detail - Sheet 2 of 2

DOCUMENT NOT CONSIDERED FINAL UNLESS ALL SIGNATURES COMPLETED

AECOM
NC Firm License No.: F-0342
5438 Wade Park Boulevard
Suite 200 Raleigh, NC 27607
Phone: 919-461-1100

ELECTRICAL AND PROGRAMMING DETAILS FOR:

Prepared for the Offices of:
Transportation Mobility and Safety Division
STATE OF NORTH CAROLINA DEPARTMENT OF TRANSPORTATION
Signals Management Section
750 N.Greenfield Pkwy,Garner,NC 27529

US 401 SB (Louisburg Road)
at
SR 2006 (Perry Creek Road)

Division 5 Wake County Raleigh

PLAN DATE:	Jan 2023	REVIEWED BY:	H.M. Surti
PREPARED BY:	A. Ravipati	REVIEWED BY:	

REVISIONS	INIT.	DATE

SEAL
NORTH CAROLINA PROFESSIONAL SEAL 034481 ENGINEER HEMANG M. SURTI

DocuSigned by: Hemang M. Surti 1/24/2023
A1C1D0D1C4A4...

SIG. INVENTORY NO. 05-1249T

1/24/2023
pw://aecom-na-pw.bentley.com:AECOM.DS21.NA.2020\Documents\60609754-U-5748 Ligon Mill\900-CAD GIS\910_CAD\70_NCDOT_TIP\Traffic\Signals\Design\Signals\Electrical Details.2022\05124ST_sm.ele.2022XXXX.dgn
mitchell.coverdough

DocuSign Envelope ID: EE0A9FB1-617B-4D0E-A869-87C1A84AA294

PROJECT REFERENCE NO.	SHEET NO.
U-5748	Sig. 7.0

PHASING DIAGRAM

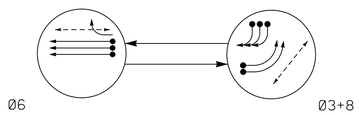

PHASING DIAGRAM DETECTION LEGEND

- DETECTED MOVEMENT
- UNDETECTED MOVEMENT (OVERLAP)
- UNSIGNALIZED MOVEMENT
- PEDESTRIAN MOVEMENT

TABLE OF OPERATION

SIGNAL FACE	PHASE 06	PHASE 03+8	PHASE FLASH
31, 32	R	R	R
61,62,63,65	G	R	R
64	Y	R	Y
81,82,83,84	R	R	R
P61, P62	W	DW	DRK
P81, P82	DW	W	DRK

SIGNAL FACE I.D.

All Heads L.E.D.

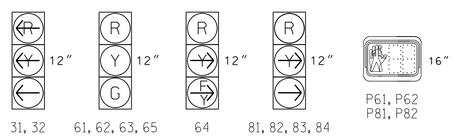

SE-PAC 2070 LOOP & DETECTOR UNIT INSTALLATION CHART

INDUCTIVE LOOPS						DETECTOR PROGRAMMING														
							TIMING		OPERATION MODE									STATUS	
LOOP NO.	SIZE (ft)	TURNS	DIST. FROM STOPBAR (ft)	NEW	EXISTING	ASSIGNED PHASE	DELAY	EXTEND (STRETCH)	0 VEHICLE	1 PEDESTRIAN	2 1 CALL	3 STOP A	4 STOP B	5 PROTFRE LEFT	6 PROTFRE THROUGH	7 AND	SWITCH	SYSTEM LOOPS	NEW	EXISTING
3A	6X40	2-4-2	0	X	-	3	- SEC.	- SEC.	X	-	-	-	-	-	-	-	-	X	-
3B	6X40	2-4-2	0	X	-	3	- SEC.	- SEC.	X	-	-	-	-	-	-	-	-	X	-
6A	6X6	5	355	X	-	6	- SEC.	- SEC.	X	-	-	-	-	-	-	-	-	X	-
6B	6X6	5	355	X	-	6	- SEC.	- SEC.	X	-	-	-	-	-	-	-	-	X	-
6C	6X6	5	355	X	-	6	- SEC.	- SEC.	X	-	-	-	-	-	-	-	-	X	-
8A	6X40	2-4-2	0	X	-	8	- SEC.	- SEC.	X	-	-	-	-	-	-	-	-	X	-
8B	6X40	2-4-2	0	X	-	8	- SEC.	- SEC.	X	-	-	-	-	-	-	-	-	X	-
8C	6X40	2-4-2	0	X	-	8	- SEC.	- SEC.	X	-	-	-	-	-	-	-	-	X	-

2 Phase
Fully Actuated
(Raleigh Signal System)

NOTES

1. Refer to "Roadway Standard Drawings NCDOT" dated January 2018 and "Standard Specifications for Roads and Structures" dated January 2018.
2. Do not program signal for late night flashing operation unless otherwise directed by the Engineer.
3. Install backplates for signal heads numbered 61, 62, 63, and 64.
4. Set all detector units to presence mode.
5. Omit "WALK" and flashing "DON'T WALK" with no pedestrian calls.
6. Program pedestrian heads to countdown the flashing "Don't Walk" time only.
7. Maximum times shown in timing chart are for free-run operation only. Coordinated signal system timing values supersede these values.
8. Program Phase 2 as a dummy phase for Ring 1.

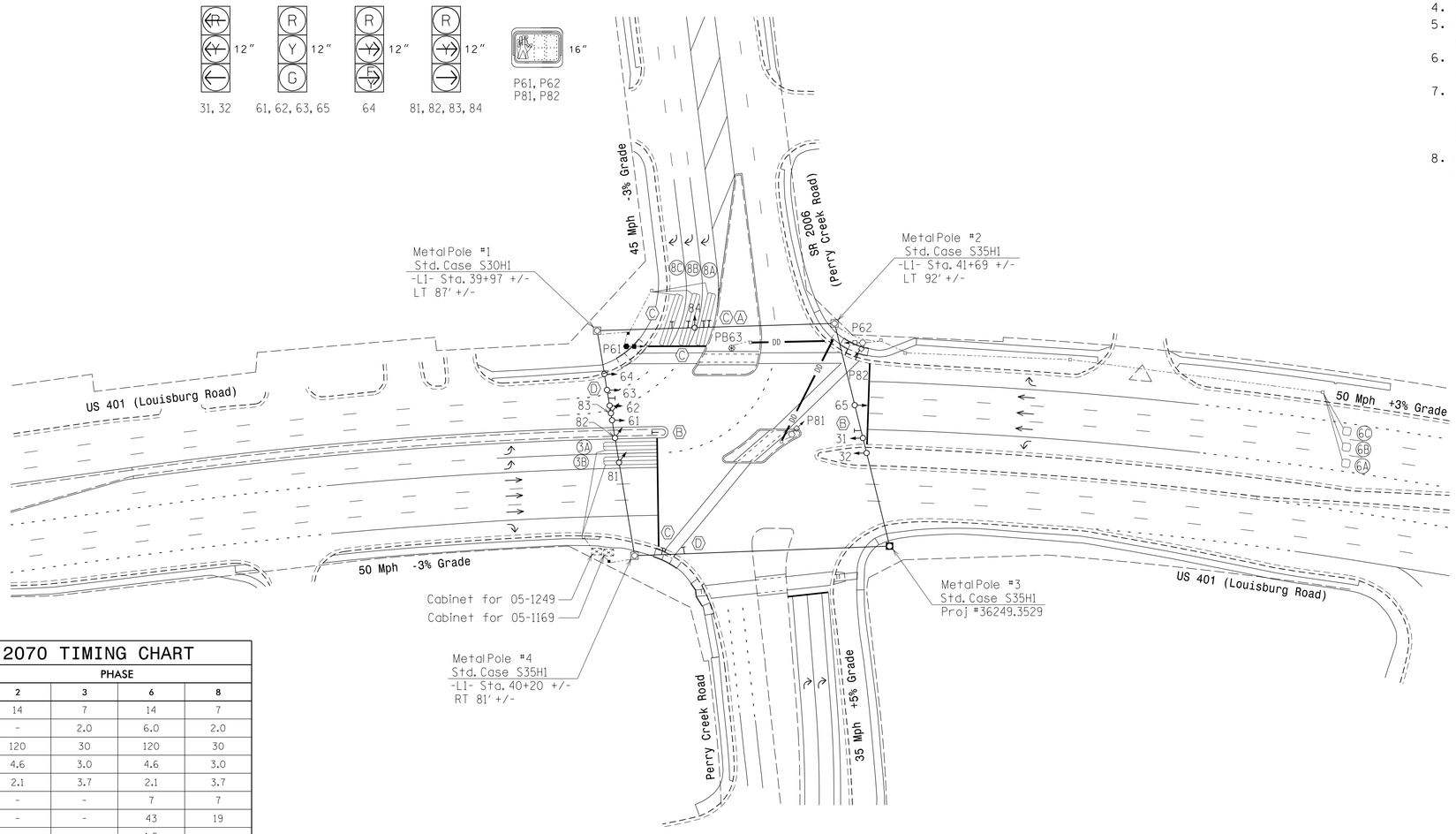

LEGEND

PROPOSED		EXISTING
	Traffic Signal Head	
	Modified Signal Head	N/A
	Sign	
	Pedestrian Signal Head	
	Push Button & Sign	N/A
	Signal Pole with Guy	
	Signal Pole with Sidewalk Guy	
	Inductive Loop Detector	
	Controller & Cabinet	
	Junction Box	
	2-in Underground Conduit	
N/A	Right of Way	
	Directional Arrow	
	Type I Pushbutton Post	
	Type II Signal Pedestal	
N/A	Curb Ramp	
DD	Directional Drill	N/A
	Metal Strain Pole	
A	No Left Turn Sign (R3-2)	A
B	No U-Turn Sign (R3-4)	B
C	"NO TURN ON RED" Sign (R10-11)	C
D	Street Name Sign By Others (D3-1)	D

SE-PAC 2070 TIMING CHART

FEATURE	PHASE 2	PHASE 3	PHASE 6	PHASE 8
Min Green *	14	7	14	7
Passage Gap *	-	2.0	6.0	2.0
Maximum Green *	120	30	120	30
Yellow Change	4.6	3.0	4.6	3.0
Red Clear	2.1	3.7	2.1	3.7
Walk *	-	-	7	7
Pedestrian Clear	-	-	43	19
Added Initial *	-	-	1.5	-
Maximum Initial *	-	-	40	-
Time Before Reduction *	-	-	20	-
Time To Reduce *	-	-	40	-
Minimum Gap	-	-	3.0	-
Recall Mode	-	-	MIN RECALL	-
Vehicle Call Memory	-	NON-LOCK	LOCK	NON-LOCK
Dual Entry	-	ON	-	ON
Simultaneous Gap	ON	ON	ON	ON

* These values may be field adjusted. Do not adjust Min Green and Extension times for phases 2 and 6 lower than what is shown. Min Green for all other phases should not be lower than 4 seconds.

Signal Upgrade - Final Design

AECOM
NC Firm License No.: F-0342
5438 Wade Park Boulevard
Suite 200 Raleigh, NC 27607
Phone: 919-461-1100

Prepared for the Offices of:
Transportation Mobility and Safety Division
STATE OF NORTH CAROLINA DEPARTMENT OF TRANSPORTATION
Signal Design Section
750 N.Greenfield Pkwy,Garner,NC 27529

US 401 SB (Louisburg Road) at SR 2006 (Perry Creek Road)

Division 5 | Wake County | Raleigh

PLAN DATE: Jan 2023 | REVIEWED BY: F.A. Campbell
PREPARED BY: H.M. Surti | REVIEWED BY:

SCALE 0 50 1"=50'

REVISIONS	INIT.	DATE

DOCUMENT NOT CONSIDERED FINAL UNLESS ALL SIGNATURES COMPLETED

SEAL
NORTH CAROLINA PROFESSIONAL SEAL 034481 ENGINEER HEMANG M. SURTI

DocuSigned by: Hemang M. Surti 1/24/2023
DOCUSIGNED BY:

SIG. INVENTORY NO. 05-1249

1/24/2023
pw:\\aecom-cow.bentley.com:AECOM_DS21_NA_2020\Documents\60609754-U-5748 Ligon Mill\900-CAD GIS\910_CADATO_NCDOT_TIP\Traffic\Signals\Designs\Signals\05249_sig_dsn_2022XXX.dgn
mitchell.coverdaugh

DocuSign Envelope ID: EE0A9FB1-617B-4D0E-A869-87C1A84AA294

PROJECT REFERENCE NO.	SHEET NO.
U-5748	Sig. 7.1

18 CHANNEL CONFLICT MONITOR PROGRAMMING DETAIL

(remove jumpers and set switches as shown)

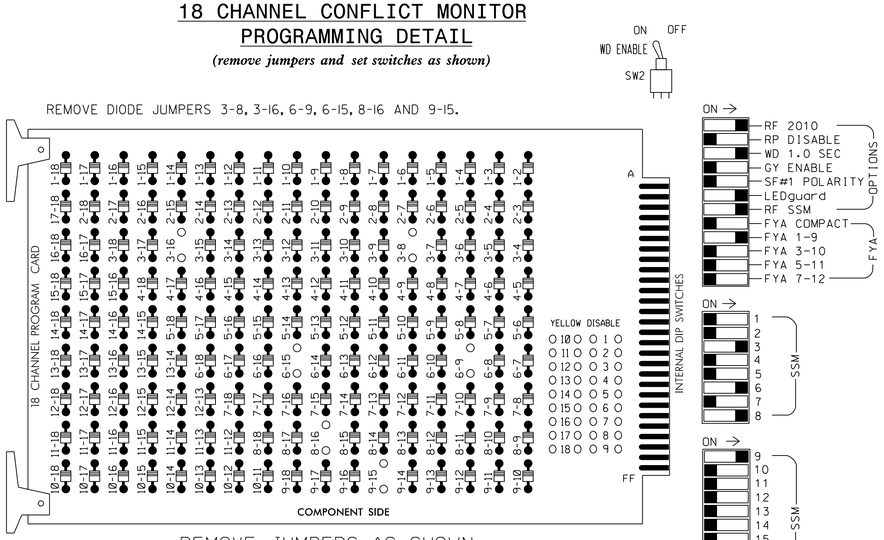

REMOVE JUMPERS AS SHOWN

■ = DENOTES POSITION OF SWITCH

NOTES:

1. Card is provided with all diode jumpers in place. Removal of any jumper allows its channels to run concurrently.
2. Ensure jumpers SEL2-SEL5 and SEL9 are present on the monitor board.
3. Ensure that Red Enable is active at all times during normal operation.
4. Connect serial cable from conflict monitor to comm. port 1 of 2070 controller. Ensure conflict monitor communicates with 2070.

NOTES

1. To prevent "flash-conflict" problems, insert red flash program blocks for all unused vehicle load switches in the output file. The installer shall verify that signal heads flash in accordance with the Signal Plans.
2. Program controller to start up in phase 6 green.
3. Enable simultaneous gap-out feature, on controller unit, for all phases.
4. Program phases 3 and 8, on controller unit, for dual entry.
5. Program phase 6, on controller unit, for volume density operation.
6. The cabinet and controller are part of the Raleigh Signal System.

EQUIPMENT INFORMATION

CONTROLLER.....2070LX
CABINET.....332 W/ AUX
SOFTWARE.....SE-PAC2070
CABINET MOUNT.....BASE
OUTPUT FILE POSITIONS...18 WITH AUX. OUTPUT FILE
LOAD SWITCHES USED.....S4,S8,S9,S11,S12,AUX S1
PHASES USED.....2*,3,6,6PED,8,8PED
OVERLAP "A".....**
OVERLAP "B".....NOT USED
OVERLAP "C".....NOT USED
OVERLAP "D".....NOT USED

* Phase used for timing purposes only
** See sheet 2 for Overlap programming.

SIGNAL HEAD HOOK-UP CHART

LOAD SWITCH NO.	S1	S2	S3	S4	S5	S6	S7	S8	S9	S10	S11	S12	AUX S1	AUX S2	AUX S3	AUX S4	AUX S5	AUX S6
CMU CHANNEL NO.	1	2	13	3	4	14	5	6	15	7	8	16	9	10	17	11	12	18
PHASE	1	2	2 PED	3	4	4 PED	5	6	6 PED	7	8	8 PED	OLA	OLB	SPARE	OLC	OLD	SPARE
SIGNAL HEAD NO.	NU	NC	NU	31,32	NU	NU	NU	61,62, 63,65	P61, P62	NU	81,82, 83,84	P81, P82	64★	NU	NU	NU	NU	NU
RED								134			107		A121					
YELLOW								135										
GREEN								136										
RED ARROW				116														
YELLOW ARROW				117							108		A122					
FLASHING YELLOW ARROW													A123					
GREEN ARROW				118							109							
✋									119			110						
🚶									121			112						

NU = Not Used
NC = Not Connected
★ See pictorial of head wiring in detail this sheet.

FYA SIGNAL WIRING DETAIL

(wire signal head as shown)

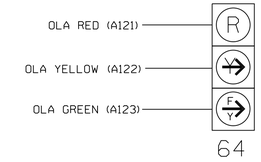

NOTE

1. See sheet 2 for Protected & Permissive Phases programming.

COUNTDOWN PEDESTRIAN SIGNAL OPERATION

Countdown Ped Signals are required to display timing only during Ped Clearance Interval. Consult Ped Signal Module user's manual for instructions on selecting this feature.

INPUT FILE POSITION LAYOUT

(front view)

		1	2	3	4	5	6	7	8	9	10	11	12	13	14
FILE "I"	U	SLOT EMPTY	SLOT EMPTY	SLOT EMPTY	SLOT EMPTY	Ø3 3A	Ø3 3B	SLOT EMPTY	SLOT EMPTY	SLOT EMPTY	SLOT EMPTY	SLOT EMPTY	SLOT EMPTY	Ø6 PED DC ISOLATOR	FS DC ISOLATOR
	L					NOT USED	NOT USED							Ø8 PED DC ISOLATOR	ST DC ISOLATOR
FILE "J"	U	SLOT EMPTY	Ø6 6A	Ø6 6C	SLOT EMPTY	SLOT EMPTY	Ø8 8A	Ø8 8C	SLOT EMPTY	SLOT EMPTY	SLOT EMPTY	SLOT EMPTY	SLOT EMPTY	SLOT EMPTY	SLOT EMPTY
	L		Ø6 6B	NOT USED			Ø8 8B	NOT USED							

EX.: 1A, 2A, ETC. = LOOP NO.'S

FS = FLASH SENSE
ST = STOP TIME

INPUT FILE CONNECTION & PROGRAMMING CHART

LOOP NO.	LOOP TERMINAL	INPUT FILE POS.	PIN NO.	DETECTOR NO.	NEMA PHASE	DELAY TIME	EXTEND (STRETCH) TIME
3A	TB4-5,6	I5U	58	9	3		
3B	TB4-9,10	I6U	41	11	3		
6A	TB3-5,6	J2U	40	21	6		
6B	TB3-7,8	J2L	44	22	6		
6C	TB3-9,10	J3U	64	23	6		
8A	TB5-9,10	J6U	42	31	8		
8B	TB5-11,12	J6L	46	32	8		
8C	TB7-1,2	J7U	66	33	8		
PED PUSH BUTTONS							
P61,P62,PB63	TB8-7,9	I13U	68	PED 6	6 PED		
P81,P82	TB8-8,9	I13L	70	PED 8	8 PED		

NOTE:
INSTALL DC ISOLATORS IN INPUT FILE SLOTS I13.

INPUT FILE POSITION LEGEND: J2L
FILE J
SLOT 2
LOWER

THIS ELECTRICAL DETAIL IS FOR
THE SIGNAL DESIGN: 05-1249
DESIGNED: Jan 2023
SEALED: 1/24/2023
REVISED:

AECOM
NC Firm License No.: F-0342
5438 Wade Park Boulevard
Suite 200 Raleigh, NC 27607
Phone: 919-461-1100

Final Design
Electrical Detail - Sheet 1 of 2

DOCUMENT NOT CONSIDERED FINAL UNLESS ALL SIGNATURES COMPLETED

ELECTRICAL AND PROGRAMMING DETAILS FOR:

Prepared for the Offices of:
Transportation Mobility and Safety Division
STATE OF NORTH CAROLINA
DEPARTMENT OF TRANSPORTATION
ITS & Signal Management Section
750 N.Greenfield Pkwy,Garner,NC 27529

US 401 SB (Louisburg Road) at SR 2006 (Perry Creek Road)

Division 5 | Wake County | Raleigh

PLAN DATE:	Jan 2023	REVIEWED BY:	H.M. Surti
PREPARED BY:	A. Ravipati	REVIEWED BY:	

REVISIONS	INIT.	DATE

SEAL
NORTH CAROLINA PROFESSIONAL SEAL 034481 ENGINEER HEMANG M. SURTI

DocuSigned by: Hemang M. Surti AE12B8D6A7A5A41 1/24/2023

SIG. INVENTORY NO. 05-1249

1/24/2023
pw://aecom-na-pw.bentley.com:AECOM_DS21_NA_2020\Documents\60609754-U-5748 Ligon Mill\300-CAD GIS\310_CAD\70_NCDOT_ITP\Traffic\Signals\Design\Signals\Electrical Details_2022\05249_sm_ele_2022XXXX.dgn
michael.cavenaugh

DocuSign Envelope ID: EE0A9FB1-617B-4D0E-A869-87C1A84AA294

FLASHING YELLOW ARROW OVERLAP AND PROTECTED/PERMISSIVE SEQUENCE PROGRAMMING FOR OVERLAP A

1. From Main Menu select 4 - UNIT DATA
2. From UNIT DATA Submenu select 3 - OVERLAP DATA

Use Up/Dn/Left/Right keys to position cursor on the desired Overlap. Use the NEXT key to select the overlap type. Press the ENT key and then program as per the Overlap screen(s) shown.

```
OVERLAP DATA

   A: FYA   E: ---   I: ---   M: ---
   B: ---   F: ---   J: ---   N: ---
   C: ---   G: ---   K: ---   O: ---
   D: ---   H: ---   L: ---   P: ---

 PREV/NEXT TO CYCLE
```

OVERLAP A

Use Up/Dn/Left/Right keys to position cursor on Overlap 'A', use the NEXT key to select 'FYA', then press ENT

```
FYA OVERLAP - A          DELAY/10:   0
       PHASES..12345678 90123456
  PERM PHASES: 00000100 00000000
  PROT PHASES: 00001000 00000000
  -PED PHASES: 00000000 00000000
     OVERLAPS..ABCDEFGH IJKLMNOP
PERM OVERLAPS: x0000000 00000000
PROT OVERLAPS: x0000000 00000000
```

NOTICE DELAY/10 = 0

Notice PROT PHASE 5

END OVERLAP PROGRAMMING

INIT & N.A. RESP PROGRAMMING DETAIL

1. From Main Menu select 3 - PHASE DATA
2. From PHASE DATA Submenu select 4 - INIT & N.A RESP

```
PHASE......1...2...3...4...5...6...7...8
 INITIAL   0   0   1   0   0   4   0   1
 NA RESP   0   0   0   0   0   1   0   0

CODES.....0....1....2....3....4....5...6
 INITL  NONE INACT RED  YEL  GRN  DRK G/DW
 NA RSP NONE  NA1  NA2  1&2  ---  --- ---
                                      ***
```

INIT & N.A. RESP PROGRAMMING COMPLETE

THIS ELECTRICAL DETAIL IS FOR
THE SIGNAL DESIGN: 05-1249
DESIGNED: Jan 2023
SEALED: 1/24/2023
REVISED:

AECOM
NC Firm License No.: F-0342
5438 Wade Park Boulevard
Suite 200 Raleigh, NC 27607
Phone: 919-461-1100

Final Design
Electrical Detail - Sheet 2 of 2

DOCUMENT NOT CONSIDERED FINAL UNLESS ALL SIGNATURES COMPLETED

ELECTRICAL AND PROGRAMMING DETAILS FOR:

Prepared for the Offices of:
Transportation Mobility and Safety Division
STATE OF NORTH CAROLINA DEPARTMENT OF TRANSPORTATION
Signals Management Section
750 N.Greenfield Pkwy,Garner,NC 27529

US 401 SB (Louisburg Road)
at
SR 2006 (Perry Creek Road)

Division 5 Wake County Raleigh

PLAN DATE:	Jan 2023	REVIEWED BY:	H.M. Surti
PREPARED BY:	A. Ravipati	REVIEWED BY:	

REVISIONS	INIT.	DATE

SEAL
NORTH CAROLINA PROFESSIONAL SEAL 034481 ENGINEER HEMANG M. SURTI

DocuSigned by:
Hemang M. Surti 1/24/2023
SIG. INVENTORY NO. 05-1249

1/24/2023
pw:\\aecom-na-pw.bentley.com:AECOM_DS21_NA_2020\Documents\60609754-U-5748 Ligon Mill\900-CAD GIS\910_CAD\70_NCDOT_TIP\Traffic\Signals\Design\Signals\Electrical Details_2022\05249_sm_ele_2022XXXX.dgn
mitchell.coverdough

DocuSign Envelope ID: EE0A9FB1-617B-4D0E-A869-87C1A84AA294

PROJECT REFERENCE NO.	SHEET NO.
U-5748	Sig. 8.0

PHASING DIAGRAM

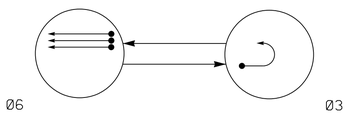

PHASING DIAGRAM DETECTION LEGEND

- DETECTED MOVEMENT
- UNDETECTED MOVEMENT (OVERLAP)
- UNSIGNALIZED MOVEMENT
- PEDESTRIAN MOVEMENT

TABLE OF OPERATION

SIGNAL FACE	PHASE Ø6	PHASE Ø3	FLASH
31	R		R
61, 62, 63	↑	R	Y

SIGNAL FACE I.D.

All Heads L.E.D.

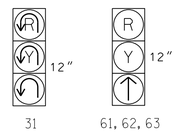

SE-PAC 2070 LOOP & DETECTOR UNIT INSTALLATION CHART

INDUCTIVE LOOPS						DETECTOR PROGRAMMING														
							TIMING		OPERATION MODE									STATUS	
									0	1	2	3	4	5	6	7			
LOOP NO.	SIZE (ft)	TURNS	DIST. FROM STOPBAR (ft)	NEW	EXISTING	ASSIGNED PHASE	DELAY	EXTEND (STRETCH)	VEHICLE	PEDESTRIAN	1 CALL	STOP A	STOP B	PROT/PER LEFT	PROT/PER THROUGH	AND	SWITCH SYSTEM LOOPS	NEW	EXISTING
3A	6X40	2-4-2	0	X	-	3	- SEC.	- SEC.	X	-	-	-	-	-	-	-	-	X	-
6A	6X6	5	355	X	-	6	- SEC.	- SEC.	X	-	-	-	-	-	-	-	-	X	-
6B	6X6	5	355	X	-	6	- SEC.	- SEC.	X	-	-	-	-	-	-	-	-	X	-
6C	6X6	5	355	X	-	6	- SEC.	- SEC.	X	-	-	-	-	-	-	-	-	X	-

2 Phase
Fully Actuated
(Raleigh Signal System)

NOTES

1. Refer to "Roadway Standard Drawings NCDOT" dated January 2018 and "Standard Specifications for Roads and Structures" dated January 2018.
2. Do not program signal for late night flashing operation unless otherwise directed by the Engineer.
3. Set all detector units to presence mode.
4. Locate new cabinet so as not to obstruct sight distance of vehicles turning right on red.
5. Maximum times shown in timing chart are for free-run operation only. Coordinated signal system timing values supersede these values.
6. Program Phase 2 as a dummy phase for Ring 1.

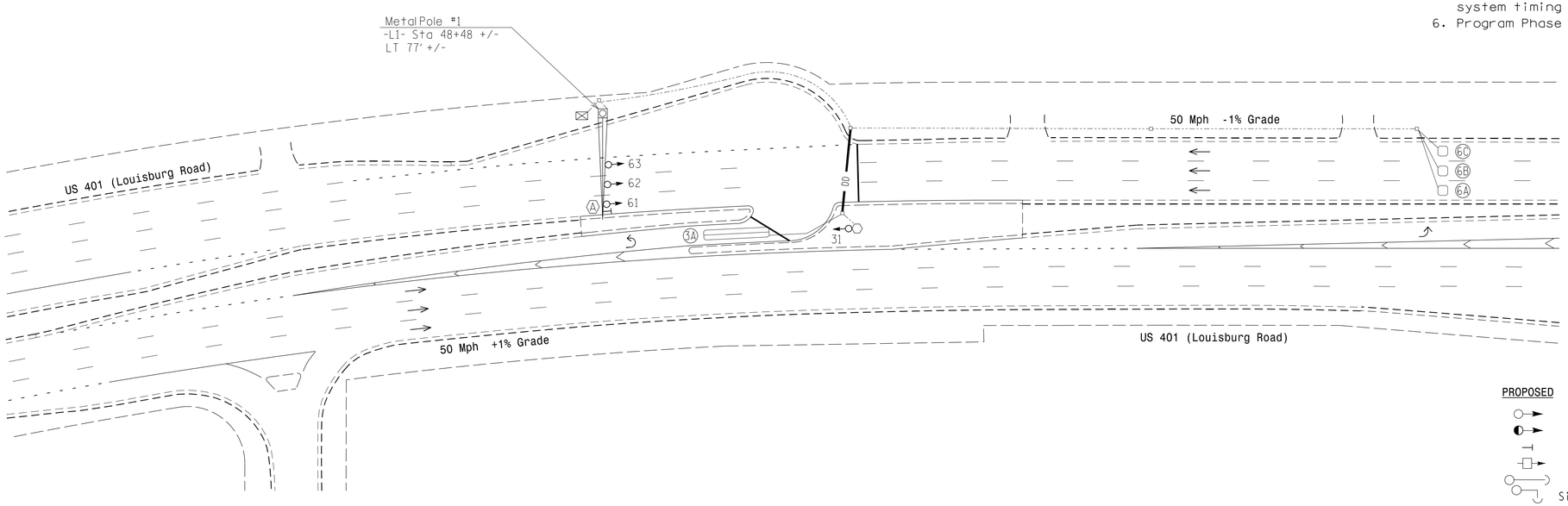

LEGEND

PROPOSED		EXISTING
	Traffic Signal Head	
	Modified Signal Head	N/A
	Sign	
	Pedestrian Signal Head	
	Signal Pole with Guy	
	Signal Pole with Sidewalk Guy	
	Inductive Loop Detector	
	Controller & Cabinet	
	Junction Box	
	2-in Underground Conduit	
N/A	Right of Way	
	Directional Arrow	
DD	Directional Drill	N/A
	Type II Signal Pedestal	
	Metal Pole with Mastarm	
A	No Left Turn Sign (R3-2)	A

SE-PAC 2070 TIMING CHART

FEATURE	PHASE 2	PHASE 3	PHASE 6
Min Green *	14	7	14
Passage Gap *	-	2.0	6.0
Maximum Green *	120	30	120
Yellow Change	4.9	3.0	4.9
Red Clear	1.0	3.9	1.0
Walk *	-	-	-
Pedestrian Clear	-	-	-
Added Initial *	-	-	1.5
Maximum Initial *	-	-	40
Time Before Reduction *	-	-	20
Time To Reduce *	-	-	40
Minimum Gap	-	-	3.0
Recall Mode	-	-	MIN RECALL
Vehicle Call Memory	-	NON-LOCK	LOCK
Dual Entry	-	-	-
Simultaneous Gap	ON	ON	ON

* These values may be field adjusted. Do not adjust Min Green and Extension times for phases 2 and 6 lower than what is shown. Min Green for all other phases should not be lower than 4 seconds.

New Installation

AECOM
NC Firm License No.: F-0342
5438 Wade Park Boulevard
Suite 200 Raleigh, NC 27607
Phone: 919-461-1100

Prepared for the Offices of:
Transportation Mobility and Safety Division
STATE OF NORTH CAROLINA DEPARTMENT OF TRANSPORTATION
Signal Design Section
750 N.Greenfield Pkwy,Garner,NC 27529

US 401 SB (Louisburg Road) at U-Turn North of SR 2006 (Perry Creek Road)

Division 5 Wake County Raleigh

PLAN DATE:	Jan 2023	REVIEWED BY:	F.A. Campbell
PREPARED BY:	H.M. Surti	REVIEWED BY:	

SCALE 0 40 1"=40'

REVISIONS	INIT.	DATE

DOCUMENT NOT CONSIDERED FINAL UNLESS ALL SIGNATURES COMPLETED

SEAL
NORTH CAROLINA PROFESSIONAL SEAL 034481 ENGINEER HEMANG M. SURTI

DocuSigned by: Hemang M. Surti 1/24/2023
SIG. INVENTORY NO. 05-1250

1/24/2023
pw:\\aecom-mcnw.bentley.com:AECOM_DS21_NA_2020\Documents\60609754-U-5748 Ligon Mill\900-CAD GIS\910_CAD\70_NCDOT_TIP\Traffic\Signals\Design\Signals\051250_sig_dsn_2022XXX.dgn
mitchell.coverdaugh

DocuSign Envelope ID: EE0A9FB1-617B-4D0E-A869-87C1A84AA294

PROJECT REFERENCE NO.	SHEET NO.
U-5748	Sig. 8.1

18 CHANNEL CONFLICT MONITOR PROGRAMMING DETAIL

(remove jumpers and set switches as shown)

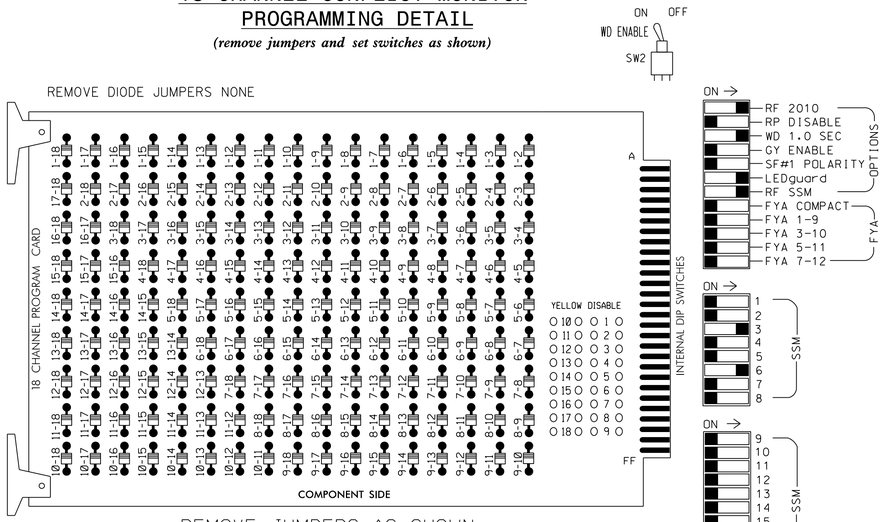

■ = DENOTES POSITION OF SWITCH

NOTES:

1. Card is provided with all diode jumpers in place. Removal of any jumper allows its channels to run concurrently.
2. Ensure jumpers SEL2-SEL5 and SEL9 are present on the monitor board.
3. Ensure that Red Enable is active at all times during normal operation.
4. Connect serial cable from conflict monitor to comm. port 1 of 2070 controller. Ensure conflict monitor communicates with 2070.

NOTES

1. To prevent "flash-conflict" problems, insert red flash program blocks for all unused vehicle load switches in the output file. The installer shall verify that signal heads flash in accordance with the Signal Plans.
2. Program controller to start up in phase 6 green.
3. Enable simultaneous gap-out feature, on controller unit, for all phases.
4. Program phase 6, on controller unit, for volume density operation.
5. The cabinet and controller are part of the Raleigh Signal System.

EQUIPMENT INFORMATION

CONTROLLER.....2070LX
CABINET.....332 W/ AUX
SOFTWARE.....SE-PAC2070
CABINET MOUNT.....BASE
OUTPUT FILE POSITIONS...18 WITH AUX. OUTPUT FILE
LOAD SWITCHES USED.....S4,S8
PHASES USED.....2*,3,6
OVERLAP "A".....NOT USED
OVERLAP "B".....NOT USED
OVERLAP "C".....NOT USED
OVERLAP "D".....NOT USED

* Phase used for timing purposes only.

SIGNAL HEAD HOOK-UP CHART

LOAD SWITCH NO.	S1	S2	S3	S4	S5	S6	S7	S8	S9	S10	S11	S12	AUX S1	AUX S2	AUX S3	AUX S4	AUX S5	AUX S6
CMU CHANNEL NO.	1	2	13	3	4	14	5	6	15	7	8	16	9	10	17	11	12	18
PHASE	1	2	2 PED	3	4	4 PED	5	6	6 PED	7	8	8 PED	OLA	OLB	SPARE	OLC	OLD	SPARE
SIGNAL HEAD NO.	NU	NC	NU	31	NU	NU	NU	61,62, 63	NU	NU	NU	NU	NU	NU	NU	NU	NU	NU
RED								134										
YELLOW								135										
GREEN																		
RED ARROW				116														
YELLOW ARROW				117														
GREEN ARROW				118				136										

NU = Not Used
NC = Not Connected

INPUT FILE POSITION LAYOUT

(front view)

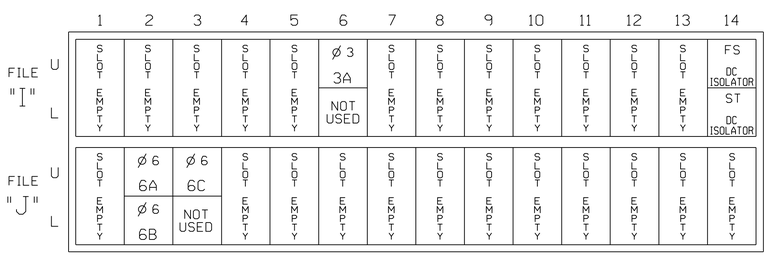

EX.: 1A, 2A, ETC. = LOOP NO.'S

FS = FLASH SENSE
ST = STOP TIME

INPUT FILE CONNECTION & PROGRAMMING CHART

LOOP NO.	LOOP TERMINAL	INPUT FILE POS.	PIN NO.	DETECTOR NO.	NEMA PHASE	DELAY TIME	EXTEND (STRETCH) TIME
3A	TB4-9,10	I6U	41	11	3		
6A	TB3-5,6	J2U	40	21	6		
6B	TB3-7,8	J2L	44	22	6		
6C	TB3-9,10	J3U	64	23	6		

INPUT FILE POSITION LEGEND: J2L
FILE J
SLOT 2
LOWER

THIS ELECTRICAL DETAIL IS FOR
THE SIGNAL DESIGN: 05-1250
DESIGNED: Jan 2023
SEALED: 1/24/2023
REVISED:

AECOM
NC Firm License No.: F-0342
5438 Wade Park Boulevard
Suite 200 Raleigh, NC 27607
Phone: 919-461-1100

Electrical Detail

DOCUMENT NOT CONSIDERED FINAL UNLESS ALL SIGNATURES COMPLETED

ELECTRICAL AND PROGRAMMING DETAILS FOR:

Prepared for the Offices of:
Mobility and Safety Division
Transportation Management Unit
Signals Management Section
750 N.Greenfield Pkwy,Garner,NC 27529

US 401 SB (Louisburg Road)
at
U-Turn North of
SR 2006 (Perry Creek Road)

Division 5 Wake County Raleigh

PLAN DATE:	Jan 2023	REVIEWED BY:	H.W. Surti
PREPARED BY:	A. Ravipati	REVIEWED BY:	

REVISIONS	INIT.	DATE

SEAL
NORTH CAROLINA PROFESSIONAL SEAL 034481 ENGINEER HEMANG M. SURTI

DocuSigned by: Hemang M. Surti AE1D8BDC7A5A41... 1/24/2023

SIG. INVENTORY NO. 05-1250

1/24/2023
pw://aecom-na-pw.bentley.com:AECOM_DS21_NA_2020\Documents\60609754-U-5748 Ligon Mill\900-CAD GIS\910_CAD\70_NCDOT_TIP\Traffic\Signals\Design\Signals\Electrical Details_2022\051250_sm_ele_2022XXXX.dgn
michael.cavenaugh

DocuSign Envelope ID: EE0A9FB1-617B-4D0E-A869-87C1A84AA294

METAL POLE No. 1

PROJECT REFERENCE NO.	SHEET NO.
U-5748	Sig. 8.2

SPECIAL NOTE

The contractor is responsible for verifying that the mast arm attachment height (H1) will provide the "Design Height" clearance from the roadway before submitting final shop drawings for approval. Verify elevation data below which was obtained by field measurement or from available project survey data.

Elevation Data for Mast Arm Attachment (H1)

Elevation Differences for:	Pole 1
Baseline reference point at ℄ Foundation @ ground level	0.0 ft.
Elevation difference at High point of roadway surface	-0.52 ft.
Elevation difference at Edge of travelway or face of curb	-0.52 ft.

MAST ARM LOADING SCHEDULE

LOADING SYMBOL	DESCRIPTION	AREA	SIZE	WEIGHT
	RIGID MOUNTED SIGNAL HEAD 12"-3 SECTION-WITH BACKPLATE	9.3 S.F.	25.5" W X 52.5" L	60 LBS
	SIGN RIGID MOUNTED	9.0 S.F.	36.0" W X 36.0" L	17 LBS
Street Name	STREET NAME SIGN RIGID MOUNTED	12.0 S.F.	18.0" W X 96.0" L	27 LBS

Design Loading for METAL POLE NO. 1

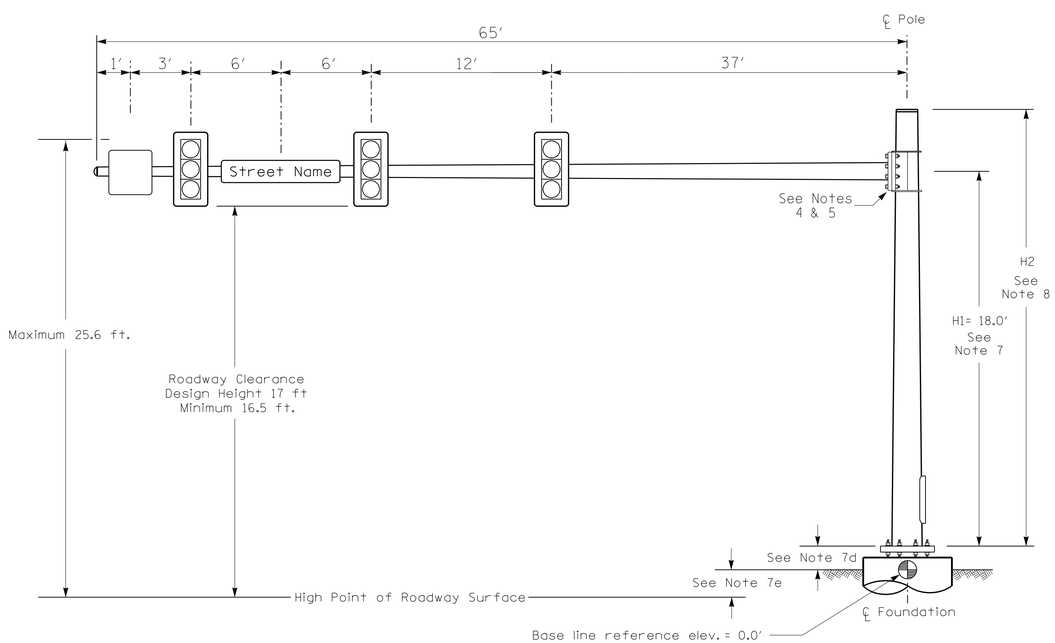

Elevation View

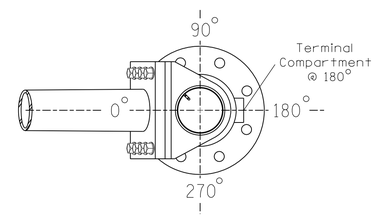

POLE RADIAL ORIENTATION

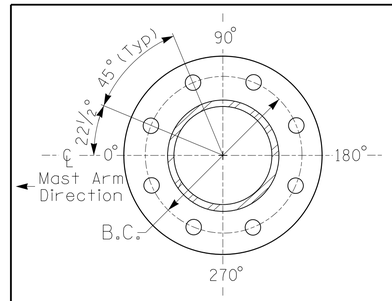

8 BOLT BASE PLATE DETAIL

See Note 6

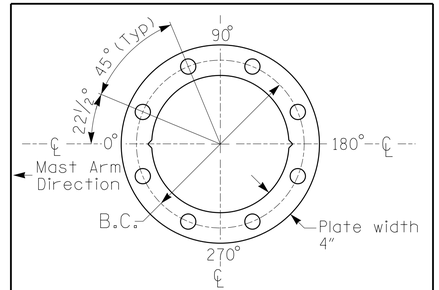

BASE PLATE TEMPLATE & ANCHOR BOLT LOCK PLATE DETAIL

For 8 Bolt Base Plate

NOTES

DESIGN REFERENCE MATERIAL

1. Design the traffic signal structure and foundation in accordance with:
   - The 6th Edition 2013 AASHTO "Standard Specifications for Structural Supports for Highway Signs, Luminaires, and Traffic Signals, including all of the latest interim revisions.
   - The 2018 NCDOT "Standard Specifications for Roads and Structures." The latest addenda to the specifications can be found in the traffic signal project special provisions.
   - The 2018 NCDOT Roadway Standard Drawings.
   - The traffic signal project plans and special provisions.
   - The NCDOT "Metal Pole Standards" located at the following NCDOT website: https://connect.ncdot.gov/resources/safety/Pages/ITS-Design-Resources.aspx

DESIGN REQUIREMENTS

2. Design the traffic signal structure using the loading conditions shown in the elevation views. These are anticipated worst case "design loads" and may not represent the actual loads that will be applied at the time of the installation. The contractor should refer to the traffic signal plans for the actual loads that will be applied at the time of the installation.
3. Design all signal supports using stress ratios that do not exceed 0.9.
4. The camber design for the mast arm deflection should provide an appearance of a low pitched arch where the tip or the free end of the mast arm does not deflect below horizontal when fully loaded.
5. A clamp-type bolted mast arm-to-pole connection may be used instead of the welded ring stiffened box connection shown as long as the connection meets all of the design requirements.
6. Design base plate with 8 anchor bolt holes. Provide 2 inch x 60 inch anchor bolts.
7. The mast arm attachment height (H1) shown is based on the following design assumptions:
   a. Mast arm slope and deflection are not considered in determining the arm attachment height as they are assumed to offset each other.
   b. Signal heads are rigidly mounted and vertically centered on the mast arm.
   c. The roadway clearance height for design is as shown in the elevation views.
   d. The top of the pole base plate is 0.75 feet above the ground elevation.
   e. Refer to the Elevation Data Chart for the elevation differences between the proposed foundation ground level and the high point of the roadway.
8. The pole manufacturer will determine the total height (H2) of each pole using the greater of the following:
   - Mast arm attachment height (H1) plus 2 feet, or
   - H1 plus 1/2 of the total height of the mast arm attachment assembly plus 1 foot.
9. If pole location adjustments are required, the contractor must gain approval from the Engineer as this may affect the mast arm lengths and arm attachment heights. The contractor may contact the Signal Design Section Senior Structural Engineer for assistance at (919) 814-5000.
10. The contractor is responsible for verifying that the mast arm length shown will allow proper positioning of the signal heads over the roadway.
11. The contractor is responsible for providing soil penetration testing data (SPT) to the pole manufacturer so site specific foundations can be designed.

AECOM
NC Firm License No.: F-0342
5438 Wade Park Boulevard
Suite 200 Raleigh, NC 27607
Phone: 919-461-1100

NCDOT Wind Zone 4 (90 mph)

DOCUMENT NOT CONSIDERED FINAL UNLESS ALL SIGNATURES COMPLETED

Prepared for the Offices of: Transportation Mobility and Safety Division, Signal Design Section, Department of Transportation, State of North Carolina

750 N.Greenfield Pkwy,Garner,NC 27529

US 401 SB (Louisburg Road) at U-Turn North of SR 2006 (Perry Creek Road)

Division 5 Wake County Raleigh

PLAN DATE: Jan 2023 REVIEWED BY: F.A. Campbell

PREPARED BY: H.M. Surti REVIEWED BY:

REVISIONS	INIT.	DATE

SCALE 0 N/A N/A

SEAL: NORTH CAROLINA PROFESSIONAL SEAL 034481 ENGINEER HEMANG M. SURTI

DocuSigned by: Hemang M. Surti 1/24/2023 AF12BB0537A5481...

SIG. INVENTORY NO. 05-1250

1/24/2023
DgN:\\aecom-na-pw.bentley.com:AECOM_DS21_NA_2020\Document\\60609754-U-5748 Ligon Mill\900-CAD GIS\910_CAD\70_NCDOT_TIP\Traffic\Signals\Design\Signals\051250_Sig_mp_2022XXXX.dgn
michael.cavanaugh

DocuSign Envelope ID: EE0A9FB1-617B-4D0E-A869-87C1A84AA294

PROJECT REFERENCE NO.	SHEET NO.
U-5748	Sig. 9.0

PHASING DIAGRAM

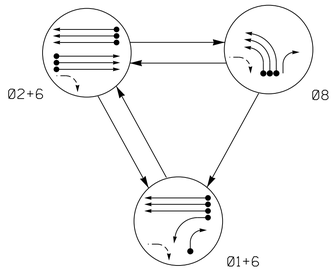

TABLE OF OPERATION

SIGNAL FACE	PHASE Ø1+6	PHASE Ø2+6	PHASE Ø8	PHASE FLASH
11	←	~~R~~	~~R~~	~~R~~
21	R	↑	R	Y
22, 23	R	G	R	Y
61, 62, 63	G	G	R	Y
81, 82, 83	~~R~~	~~R~~	←	~~R~~
84	→	R	→	R

SIGNAL FACE I.D.

All Heads L.E.D.

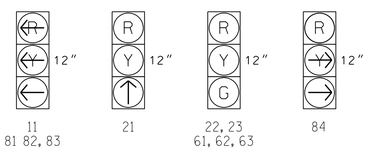

PHASING DIAGRAM DETECTION LEGEND

- DETECTED MOVEMENT
- UNDETECTED MOVEMENT (OVERLAP)
- UNSIGNALIZED MOVEMENT
- PEDESTRIAN MOVEMENT

SE-PAC 2070 LOOP & DETECTOR UNIT INSTALLATION CHART

INDUCTIVE LOOPS						DETECTOR PROGRAMMING														
							TIMING		OPERATION MODE									STATUS	
ZONE NO.	SIZE (ft)	TURNS	DIST. FROM STOPBAR (ft)	NEW	EXISTING	ASSIGNED PHASE	DELAY	EXTEND (STRETCH)	0 VEHICLE	1 PEDESTRIAN	2 1 CALL	3 STOP A	4 STOP B	5 PROTPER	6 LEFT PROTPER THROUGH	7 AND	SWITCH SYSTEM LOOPS	NEW	EXISTING
1A*	6X40	✳	0	✳	-	1	- SEC.	- SEC.	X	-	-	-	-	-	-	-	-	✳	-
1B*	6X40	✳	0	✳	-	1	- SEC.	- SEC.	X	-	-	-	-	-	-	-	-	✳	-
2A*	6X6	✳	355	✳	-	2	- SEC.	- SEC.	X	-	-	-	-	-	-	-	-	✳	-
2B*	6X6	✳	355	✳	-	2	- SEC.	- SEC.	X	-	-	-	-	-	-	-	-	✳	-
2C*	6X6	✳	355	✳	-	2	- SEC.	- SEC.	X	-	-	-	-	-	-	-	-	✳	-
6A*	6X6	✳	355	✳	-	6	- SEC.	- SEC.	X	-	-	-	-	-	-	-	-	✳	-
6B*	6X6	✳	355	✳	-	6	- SEC.	- SEC.	X	-	-	-	-	-	-	-	-	✳	-
6C*	6X6	✳	355	✳	-	6	- SEC.	- SEC.	X	-	-	-	-	-	-	-	-	✳	-
8A*	6X40	✳	0	✳	-	8	- SEC.	- SEC.	X	-	-	-	-	-	-	-	-	✳	-
8B*	6X40	✳	0	✳	-	8	- SEC.	- SEC.	X	-	-	-	-	-	-	-	-	✳	-
8C*	6X40	✳	0	✳	-	8	- SEC.	- SEC.	X	-	-	-	-	-	-	-	-	✳	-

✳ Video Detection Zone

3 Phase
Fully Actuated
(Raleigh Signal System)

NOTES

1. Refer to "Roadway Standard Drawings NCDOT" dated January 2018 and "Standard Specifications for Roads and Structures" dated January 2018.
2. Do not program signal for late night flashing operation unless otherwise directed by the Engineer.
3. Phase 1 may be lagged.
4. Set all detector units to presence mode.
5. Locate new cabinet so as not to obstruct sight distance of vehicles turning right on red.
6. This intersection uses video detection. Install detectors according to the manufacturer's instructions to achieve the desired detection.
7. Maximum times shown in timing chart are for free-run operation only. Coordinated signal system timing values supersede these values.
8. Program phase 4 as a dummy phase for Ring 1.

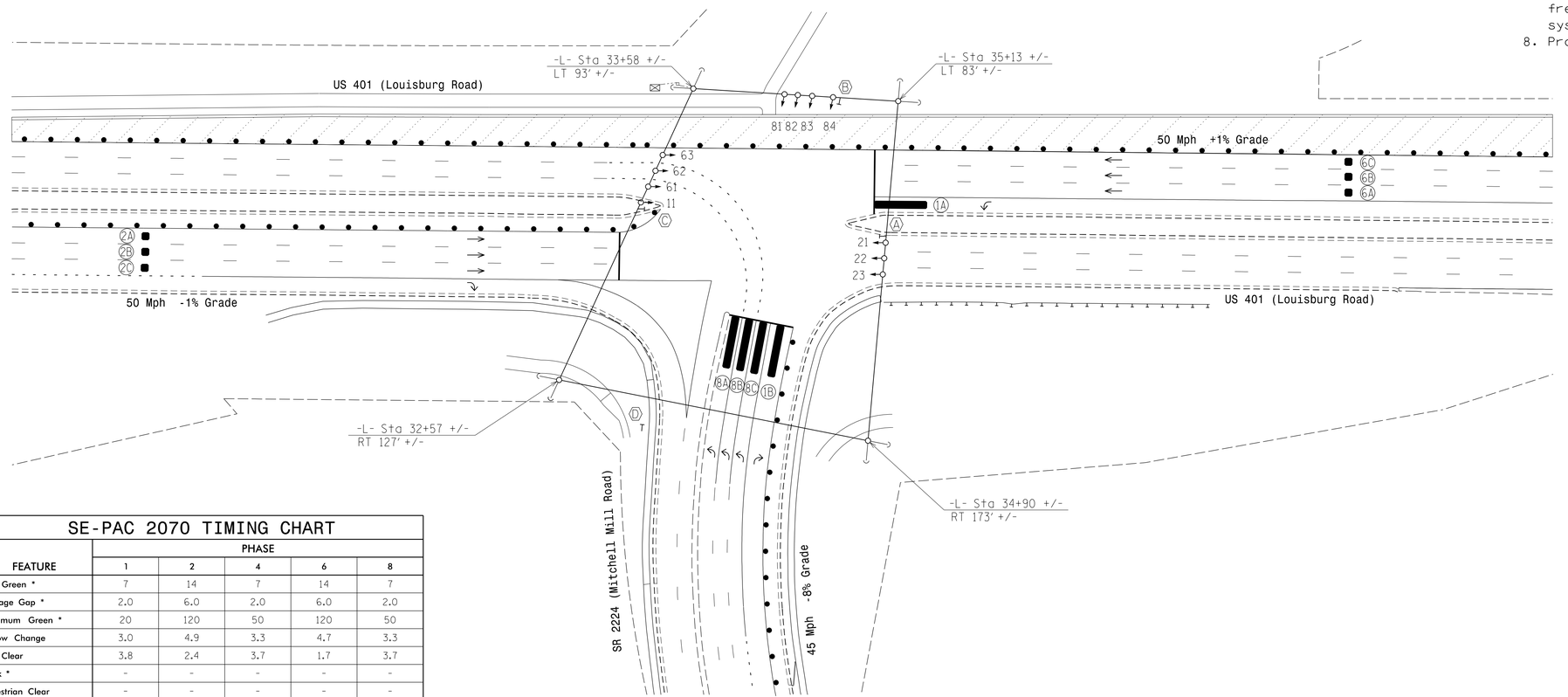

LEGEND

PROPOSED		EXISTING
	Traffic Signal Head	
	Modified Signal Head	N/A
	Sign	
	Pedestrian Signal Head	
	Signal Pole with Guy	
	Signal Pole with Sidewalk Guy	
	Inductive Loop Detector	
	Controller & Cabinet	
	Junction Box	
	2-in Underground Conduit	
N/A	Right of Way	
	Directional Arrow	
	Video Detection Zone	
	Construction Zone	
	Construction Zone Drums	
N/A	Guardrail	
Ⓐ	"NO U-TURN/NO LEFT TURN" Sign (R3-18)	Ⓐ
Ⓑ	"NO TURN ON RED" Sign (R10-11)	Ⓑ
Ⓒ	"U-TURN YIELD TO RIGHT TURN" Sign (R10-16)	Ⓒ
Ⓓ	"ADDED LANE" Sign (W4-3)	Ⓓ

SE-PAC 2070 TIMING CHART

FEATURE	PHASE 1	PHASE 2	PHASE 4	PHASE 6	PHASE 8
Min Green *	7	14	7	14	7
Passage Gap *	2.0	6.0	2.0	6.0	2.0
Maximum Green *	20	120	50	120	50
Yellow Change	3.0	4.9	3.3	4.7	3.3
Red Clear	3.8	2.4	3.7	1.7	3.7
Walk *	-	-	-	-	-
Pedestrian Clear	-	-	-	-	-
Added Initial *	-	1.5	-	1.5	-
Maximum Initial *	-	40	-	40	-
Time Before Reduction *	-	20	-	20	-
Time To Reduce *	-	40	-	40	-
Minimum Gap	-	3.0	-	3.0	-
Recall Mode	-	MIN RECALL	-	MIN RECALL	-
Vehicle Call Memory	NON-LOCK	LOCK	NON-LOCK	LOCK	NON-LOCK
Dual Entry	-	-	-	-	-
Simultaneous Gap	ON	ON	ON	ON	ON

* These values may be field adjusted. Do not adjust Min Green and Extension times for phases 2 and 6 lower than what is shown. Min Green for all other phases should not be lower than 4 seconds.

Signal Upgrade - Temp Design 1 (TMP Phase II)

DOCUMENT NOT CONSIDERED FINAL UNLESS ALL SIGNATURES COMPLETED

AECOM
NC Firm License No.: F-0342
5438 Wade Park Boulevard
Suite 200 Raleigh, NC 27607
Phone: 919-461-1100

Prepared for the Offices of:
Transportation Mobility and Safety Division
STATE OF NORTH CAROLINA DEPARTMENT OF TRANSPORTATION
Signal Design Section
750 N.Greenfield Pkwy,Garner,NC 27529

US 401 (Louisburg Road)
at
SR 2224 (Mitchell Mill Road)

Division 5 Wake County Raleigh

PLAN DATE: Jan 2023 REVIEWED BY: F.A. Campbell
PREPARED BY: H.M. Surti REVIEWED BY:

SCALE 0 50 1"=50'

REVISIONS	INIT.	DATE

SEAL
NORTH CAROLINA PROFESSIONAL SEAL 034481 ENGINEER HEMANG M. SURTI

DocuSigned by: Hemang M. Surti 1/24/2023
SIGNATURE/DATE

SIG. INVENTORY NO. 05-1982TI

1/24/2023
pw:\\aecom-mc-cbw.bentley.com:AECOM_DS21_NA_2020\Documents\60609754-U-5748 Ligon Mill\900-CAD GIS\910_CAD\70_NCDOT_TIP\Traffic\Signals\Design\Signals\05198ZT1_sig_dsn_2022XXXX.dgn
mitchael.cavenaugh

DocuSign Envelope ID: EE0A9FB1-617B-4D0E-A869-87C1A84AA294

PROJECT REFERENCE NO.	SHEET NO.
U-5748	Sig. 9.1

18 CHANNEL CONFLICT MONITOR PROGRAMMING DETAIL

(remove jumpers and set switches as shown)

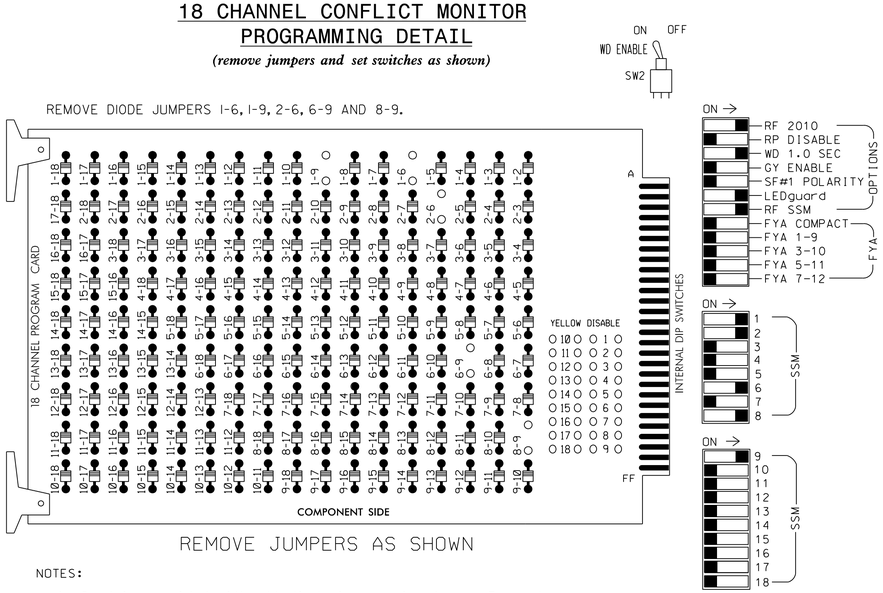

NOTES:

1. Card is provided with all diode jumpers in place. Removal of any jumper allows its channels to run concurrently.
2. Ensure jumpers SEL2-SEL5 and SEL9 are present on the monitor board.
3. Ensure that Red Enable is active at all times during normal operation.
4. Connect serial cable from conflict monitor to comm. port 1 of 2070 controller. Ensure conflict monitor communicates with 2070.

NOTES

1. To prevent "flash-conflict" problems, insert red flash program blocks for all unused vehicle load switches in the output file. The installer shall verify that signal heads flash in accordance with the Signal Plans.
2. Program controller to start up in phases 2 and 6 green.
3. Enable simultaneous gap-out feature, on controller unit, for all phases.
4. Program phases 2 and 6, on controller unit, for volume density operation.
5. The cabinet and controller are part of the Raleigh Signal System.

EQUIPMENT INFORMATION

CONTROLLER.....2070LX
CABINET.....332 W/ AUX
SOFTWARE.....SE-PAC2070
CABINET MOUNT.....BASE
OUTPUT FILE POSITIONS...18 WITH AUX. OUTPUT FILE
LOAD SWITCHES USED.....S1,S2,S8,S11,AUX S1
PHASES USED.....1,2,4*,6,8
OVERLAP "A".....**
OVERLAP "B".....NOT USED
OVERLAP "C".....NOT USED
OVERLAP "D".....NOT USED

* Phase used for timing purposes only.
** See this sheet for overlap programming.

SIGNAL HEAD HOOK-UP CHART

LOAD SWITCH NO.	S1	S2		S3	S4	S5	S6	S7	S8	S9	S10	S11	S12	AUX S1	AUX S2	AUX S3	AUX S4	AUX S5	AUX S6
CMU CHANNEL NO.	1	2		13	3	4	14	5	6	15	7	8	16	9	10	17	11	12	18
PHASE	1	2		2 PED	3	4	4 PED	5	6	6 PED	7	8	8 PED	OLA	OLB	SPARE	OLC	OLD	SPARE
SIGNAL HEAD NO.	11	21	22,23	NU	NU	NC	NU	NU	61,62 63	NU	NU	81,82, 83	NU	84	NU	NU	NU	NU	NU
RED		128	128						134					A121					
YELLOW		129	129						135										
GREEN			130						136										
RED ARROW	125											107							
YELLOW ARROW	126											108		A122					
GREEN ARROW	127	130										109		A123					

NU = Not Used
NC = Not Connected

OVERLAP PROGRAMMING FOR OVERLAP A

1. From Main Menu select [4 - UNIT DATA]
2. From UNIT DATA Submenu select [3 - OVERLAP DATA]

Use Up/Dn/Left/Right keys to position cursor on the desired Overlap. Use the NEXT key to select the overlap type. Press the ENT key and then program as per the Overlap screen(s) shown.

```
OVERLAP DATA

  A: STD   E: ---   I: ---   M: ---
  B: ---   F: ---   J: ---   N: ---
  C: ---   G: ---   K: ---   O: ---
  D: ---   H: ---   L: ---   P: ---

 PREV/NEXT TO CYCLE
```

OVERLAP A

Use Up/Dn/Left/Right keys to position cursor on Overlap 'A', use the NEXT key to select 'STD', then press ENT

```
OVERLAP - A        12345678 90123456
          PARENTS: 10000001 00000000
      +GRN PHASES: 00000000 00000000
      -G/Y PHASES: 00000000 00000000
      -PED PHASES: 00000000 00000000
 TRAIL GREEN STANDARD:   0  YEL/10:  40
 TRAIL GREEN  PREEMPT:   0  YEL/10:  20
```

END OVERLAP PROGRAMMING

INPUT FILE POSITION LAYOUT

(front view)

		1	2	3	4	5	6	7	8	9	10	11	12	13	14
FILE "I"	U	SLOT EMPTY	SLOT EMPTY	SLOT EMPTY	SLOT EMPTY	SLOT EMPTY	SLOT EMPTY	SLOT EMPTY	SLOT EMPTY	SLOT EMPTY	SLOT EMPTY	SLOT EMPTY	SLOT EMPTY	SLOT EMPTY	FS DC ISOLATOR
	L														ST DC ISOLATOR
FILE "J"	U	SLOT EMPTY	SLOT EMPTY	SLOT EMPTY	SLOT EMPTY	SLOT EMPTY	SLOT EMPTY	SLOT EMPTY	SLOT EMPTY	SLOT EMPTY	SLOT EMPTY	SLOT EMPTY	SLOT EMPTY	SLOT EMPTY	SLOT EMPTY
	L														

EX.: 1A, 2A, ETC. = LOOP NO.'S

FS = FLASH SENSE
ST = STOP TIME

INPUT FILE POSITION LEGEND: J2L
FILE J
SLOT 2
LOWER

SPECIAL DETECTOR NOTE

Install a video detection system for vehicle detection. Perform installation according to manufacturer's directions and NCDOT engineer-approved mounting locations to accomplish the detection schemes shown on the Signal Design Plans.

FLASHER CIRCUIT MODIFICATION DETAIL

IN ORDER TO INSURE THAT SIGNALS FLASH CONCURRENTLY ON THE SAME APPROACH, MAKE THE FOLLOWING FLASHER CIRCUIT CHANGES:

1. ON REAR OF PDA - REMOVE WIRE FROM TERM. T2-4 AND TERMINATE ON T2-2.
2. ON REAR OF PDA - REMOVE WIRE FROM TERM. T2-5 AND TERMINATE ON T2-3.
3. REMOVE FLASHER UNIT 2.

THE CHANGES LISTED ABOVE TIES ALL PHASES AND OVERLAPS TO FLASHER UNIT 1.

THIS ELECTRICAL DETAIL IS FOR
THE SIGNAL DESIGN: 05-1982T1
DESIGNED: Jan 2023
SEALED: 1/24/2023
REVISED:

AECOM
NC Firm License No.: F-0342
5438 Wade Park Boulevard
Suite 200 Raleigh, NC 27607
Phone: 919-461-1100

Temporary Design 1 (TMP Phase II)
Electrical Detail

DOCUMENT NOT CONSIDERED FINAL UNLESS ALL SIGNATURES COMPLETED

ELECTRICAL AND PROGRAMMING DETAILS FOR:

Prepared for the Offices of:
Traffic Engineering & Signal Management Section, Mobility and Safety Division, NC Department of Transportation

750 N.Greenfield Pkwy,Garner,NC 27529

US 401 (Louisburg Road)
at
SR 2224 (Mitchell Mill Road)

Division 5 | Wake County | Raleigh

PLAN DATE: Jan 2023	REVIEWED BY: H.M. Surti
PREPARED BY: A. Ravipati	REVIEWED BY:

REVISIONS	INIT.	DATE

SEAL
NORTH CAROLINA PROFESSIONAL SEAL 034481 ENGINEER HEMANG M. SURTI

DocuSigned by: Hemang M. Surti AF1D8DDC7A5A41... 1/24/2023

SIG. INVENTORY NO. 05-1982T1

1/24/2023
pw:\\aecom-na-pw.bentley.com:AECOM_DS21_NA_2020\Documents\60609754-U-5748 Lion Mill\900-CAD GIS\10_CAD\70_NCDOT_TIP\Traffic\Signals\Design\Signals\Electrical Details_2022\05198271_sm.dgn
michael.cavenaugh

DocuSign Envelope ID: EE0A9FB1-617B-4D0E-A869-87C1A84AA294

PROJECT REFERENCE NO.	SHEET NO.
U-5748	Sig. 10.0

PHASING DIAGRAM

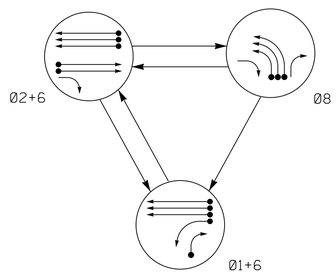

TABLE OF OPERATION

SIGNAL FACE	PHASE Ø1+6	PHASE Ø2+6	PHASE Ø8	FLASH
11	↚	̸R	̸R	̸R
21	R	↑	R	Y
22, 24	R	G	R	Y
23	R	↛	↛	̸Y
61, 62, 63	G	G	R	Y
81, 82, 83	̸R	̸R	↚	̸R
84	↛	R	↛	R

SIGNAL FACE I.D.

All Heads L.E.D.

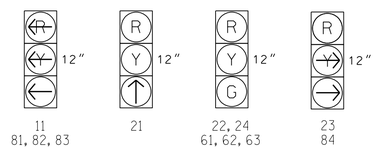

SE-PAC 2070 LOOP & DETECTOR UNIT INSTALLATION CHART

INDUCTIVE LOOPS						DETECTOR PROGRAMMING													
							TIMING		OPERATION MODE									STATUS	
ZONE NO.	SIZE (ft)	TURNS	DIST. FROM STOPBAR (ft)	NEW	EXISTING	ASSIGNED PHASE	DELAY	EXTEND (STRETCH)	0 VEHICLE	1 PEDESTRIAN	2 1 CALL	3 STOP A	4 STOP B	5 PROTFREE LEFT	6 PROTFREE THROUGH	7 AND	SWITCH SYSTEM LOOPS	NEW	EXISTING
1A∗	6X40	∗	0	∗	-	1	- SEC.	- SEC.	X	-	-	-	-	-	-	-	-	∗	-
1B∗	6X40	∗	0	∗	-	1	- SEC.	- SEC.	X	-	-	-	-	-	-	-	-	∗	-
2A∗	6X6	∗	355	∗	-	2	- SEC.	- SEC.	X	-	-	-	-	-	-	-	-	∗	-
2B∗	6X6	∗	355	∗	-	2	- SEC.	- SEC.	X	-	-	-	-	-	-	-	-	∗	-
6A∗	6X6	∗	355	∗	-	6	- SEC.	- SEC.	X	-	-	-	-	-	-	-	-	∗	-
6B∗	6X6	∗	355	∗	-	6	- SEC.	- SEC.	X	-	-	-	-	-	-	-	-	∗	-
6C∗	6X6	∗	355	∗	-	6	- SEC.	- SEC.	X	-	-	-	-	-	-	-	-	∗	-
8A∗	6X40	∗	0	∗	-	8	3 SEC.	- SEC.	X	-	-	-	-	-	-	-	-	∗	-
8B∗	6X40	∗	0	∗	-	8	- SEC.	- SEC.	X	-	-	-	-	-	-	-	-	∗	-
8C∗	6X40	∗	0	∗	-	8	- SEC.	- SEC.	X	-	-	-	-	-	-	-	-	∗	-

∗ Video Detection Zone

3 Phase
Fully Actuated
(Raleigh Signal System)

NOTES

1. Refer to "Roadway Standard Drawings NCDOT" dated January 2018 and "Standard Specifications for Roads and Structures" dated January 2018.
2. Do not program signal for late night flashing operation unless otherwise directed by the Engineer.
3. Phase 1 may be lagged.
4. Reposition all existing signal heads as shown.
5. Reposition existing signs Ⓐ and Ⓑ.
6. Remove existing R10-16 and W4-3 signs.
7. Set all detector units to presence mode.
8. This intersection uses video detection. Install detectors according to the manufacturer's instructions to achieve the desired detection.
9. Maximum times shown in timing chart are for free-run operation only. Coordinated signal system timing values supersede these values.
10. Program phase 4 as a dummy phase for Ring 1.

PHASING DIAGRAM DETECTION LEGEND

- DETECTED MOVEMENT
- UNDETECTED MOVEMENT (OVERLAP)
- UNSIGNALIZED MOVEMENT
- PEDESTRIAN MOVEMENT

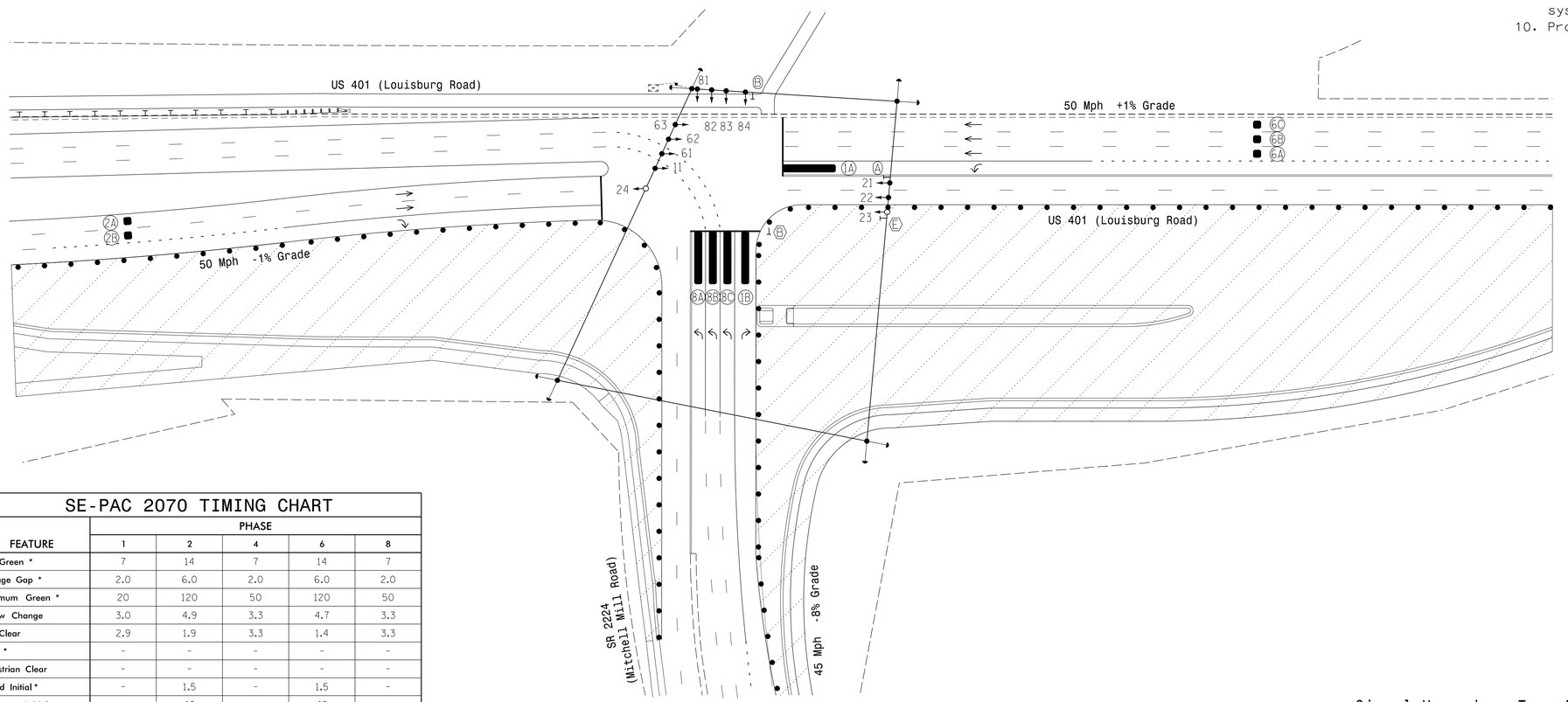

LEGEND

PROPOSED		EXISTING
	Traffic Signal Head	
	Modified Signal Head	N/A
	Sign	
	Pedestrian Signal Head	
	Signal Pole with Guy	
	Signal Pole with Sidewalk Guy	
	Inductive Loop Detector	
	Controller & Cabinet	
	Junction Box	
	2-in Underground Conduit	
N/A	Right of Way	
	Directional Arrow	
	Video Detection Zone	
	Construction Zone	
	Construction Zone Drums	
Ⓐ	"NO U-TURN/NO LEFT TURN" Sign (R3-18)	Ⓐ
Ⓑ	"NO TURN ON RED" Sign (R10-11)	Ⓑ
Ⓔ	Right Arrow "ONLY" Sign (R3-5R)	Ⓔ

SE-PAC 2070 TIMING CHART

FEATURE	PHASE 1	PHASE 2	PHASE 4	PHASE 6	PHASE 8
Min Green *	7	14	7	14	7
Passage Gap *	2.0	6.0	2.0	6.0	2.0
Maximum Green *	20	120	50	120	50
Yellow Change	3.0	4.9	3.3	4.7	3.3
Red Clear	2.9	1.9	3.3	1.4	3.3
Walk *	-	-	-	-	-
Pedestrian Clear	-	-	-	-	-
Added Initial *	-	1.5	-	1.5	-
Maximum Initial *	-	40	-	40	-
Time Before Reduction *	-	20	-	20	-
Time To Reduce *	-	40	-	40	-
Minimum Gap	-	3.0	-	3.0	-
Recall Mode	-	MIN RECALL	-	MIN RECALL	-
Vehicle Call Memory	NON-LOCK	LOCK	NON-LOCK	LOCK	NON-LOCK
Dual Entry	-	-	-	-	-
Simultaneous Gap	ON	ON	ON	ON	ON

* These values may be field adjusted. Do not adjust Min Green and Extension times for phases 2 and 6 lower than what is shown. Min Green for all other phases should not be lower than 4 seconds.

Signal Upgrade - Temp Design 2 (TMP Phase III)

DOCUMENT NOT CONSIDERED FINAL UNLESS ALL SIGNATURES COMPLETED

AECOM
NC Firm License No.: F-0342
701 Corporate Center Drive
Suite 475 Raleigh, NC 27607
Phone: 919-854-6200

Prepared for the Offices of:
Transportation Mobility and Safety Division
STATE OF NORTH CAROLINA DEPARTMENT OF TRANSPORTATION
Signal Design Section
750 N.Greenfield Pkwy,Garner,NC 27529

SCALE 0 50 1"=50'

US 401 (Louisburg Road)
at
SR 2224 (Mitchell Mill Road)

Division 5 Wake County Raleigh

PLAN DATE: Jan 2023 REVIEWED BY: F.A. Campbell
PREPARED BY: H.M. Surti REVIEWED BY:

REVISIONS	INIT.	DATE

SEAL
NORTH CAROLINA PROFESSIONAL SEAL 034481 ENGINEER HEMANG M. SURTI

DocuSigned by: Hemang M. Surti 1/24/2023
AE12B0D7A5A51...
SIG. INVENTORY NO. 05-198212

1/24/2023
pw://aecomnaprw.bentley.com:AECOM_DS21_NA_2020\Documents\60609754-U-5748 Ligon Mill\900-CAD GIS\910_CAD\70_NCDOT_TIP\Traffic\Signals\Design\Signals\05198212_sig_dsn_2022XXXX.dgn
mitchell.cavenaugh

DocuSign Envelope ID: EE0A9FB1-617B-4D0E-A869-87C1A84AA294

PROJECT REFERENCE NO.	SHEET NO.
U-5748	Sig. 10.1

18 CHANNEL CONFLICT MONITOR PROGRAMMING DETAIL

(remove jumpers and set switches as shown)

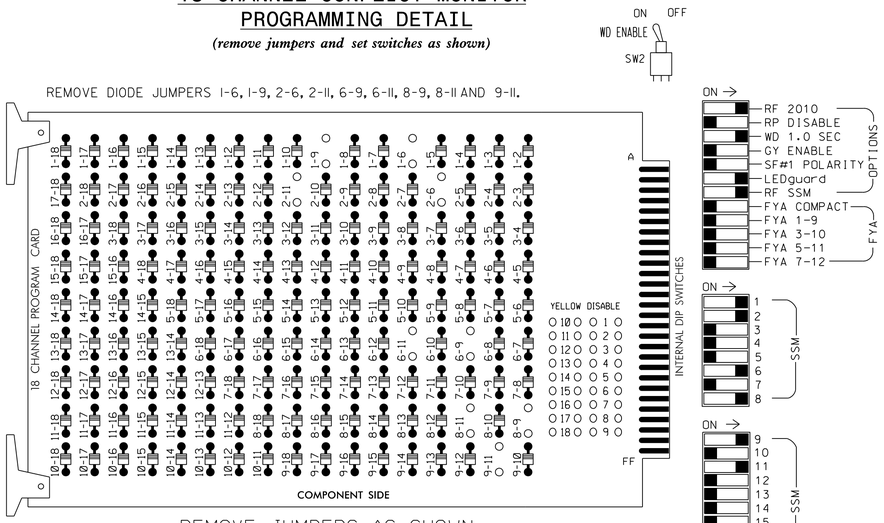

■ = DENOTES POSITION OF SWITCH

NOTES:

1. Card is provided with all diode jumpers in place. Removal of any jumper allows its channels to run concurrently.
2. Ensure jumpers SEL2-SEL5 and SEL9 are present on the monitor board.
3. Ensure that Red Enable is active at all times during normal operation.
4. Connect serial cable from conflict monitor to comm. port 1 of 2070 controller. Ensure conflict monitor communicates with 2070.

NOTES

1. To prevent "flash-conflict" problems, insert red flash program blocks for all unused vehicle load switches in the output file. The installer shall verify that signal heads flash in accordance with the Signal Plans.
2. Program controller to start up in phases 2 and 6 green.
3. Enable simultaneous gap-out feature, on controller unit, for all phases.
4. Program phases 2 and 6, on controller unit, for volume density operation.
5. The cabinet and controller are part of the Raleigh Signal System.

EQUIPMENT INFORMATION

CONTROLLER.....2070LX
CABINET.....332 W/ AUX
SOFTWARE.....SE-PAC2070
CABINET MOUNT.....BASE
OUTPUT FILE POSITIONS...18 WITH AUX. OUTPUT FILE
LOAD SWITCHES USED.....S1,S2,S8,S11,AUX S1,AUX S4
PHASES USED.....1,2,4*,6,8
OVERLAP "A".....**
OVERLAP "B".....NOT USED
OVERLAP "C".....**
OVERLAP "D".....NOT USED

* Phase used for timing purposes only.
** See Sheet 2 for overlap programming.

SIGNAL HEAD HOOK-UP CHART

LOAD SWITCH NO.	S1	S2		S3	S4	S5	S6	S7	S8	S9	S10	S11	S12	AUX S1	AUX S2	AUX S3	AUX S4	AUX S5	AUX S6
CMU CHANNEL NO.	1	2		13	3	4	14	5	6	15	7	8	16	9	10	17	11	12	18
PHASE	1	2		2 PED	3	4	4 PED	5	6	6 PED	7	8	8 PED	OLA	OLB	SPARE	OLC	OLD	SPARE
SIGNAL HEAD NO.	11	21	22,24	NU	NU	NC	NU	NU	61,62 63	NU	NU	81,82, 83	NU	84	NU	NU	23	NU	NU
RED		128	128						134					A121			A114		
YELLOW		129	129						135										
GREEN			130						136										
RED ARROW	125											107							
YELLOW ARROW	126											108		A122			A115		
GREEN ARROW	127	130										109		A123			A116		

NU = Not Used
NC = Not Connected

INPUT FILE POSITION LAYOUT

(front view)

		1	2	3	4	5	6	7	8	9	10	11	12	13	14
FILE "I"	U	SLOT	SLOT	SLOT	SLOT	SLOT	SLOT	SLOT	SLOT	SLOT	SLOT	SLOT	SLOT	SLOT	FS DC ISOLATOR
	L	EMPTY	EMPTY	EMPTY	EMPTY	EMPTY	EMPTY	EMPTY	EMPTY	EMPTY	EMPTY	EMPTY	EMPTY	EMPTY	ST DC ISOLATOR
FILE "J"	U	SLOT	SLOT	SLOT	SLOT	SLOT	SLOT	SLOT	SLOT	SLOT	SLOT	SLOT	SLOT	SLOT	SLOT
	L	EMPTY	EMPTY	EMPTY	EMPTY	EMPTY	EMPTY	EMPTY	EMPTY	EMPTY	EMPTY	EMPTY	EMPTY	EMPTY	EMPTY

EX.: 1A, 2A, ETC. = LOOP NO.'S

FS = FLASH SENSE
ST = STOP TIME

INPUT FILE POSITION LEGEND: J2L
FILE J
SLOT 2
LOWER

SPECIAL DETECTOR NOTE

Install a video detection system for vehicle detection. Perform installation according to manufacturer's directions and NCDOT engineer-approved mounting locations to accomplish the detection schemes shown on the Signal Design Plans.

THIS ELECTRICAL DETAIL IS FOR
THE SIGNAL DESIGN: 05-1982T2
DESIGNED: Jan 2023
SEALED: 1/24/2023
REVISED:

Temporary Design 2 (TMP Phase III)
Electrical Detail - Sheet 1 of 2

DOCUMENT NOT CONSIDERED FINAL UNLESS ALL SIGNATURES COMPLETED

AECOM
NC Firm License No.: F-0342
5438 Wade Park Boulevard
Suite 200 Raleigh, NC 27607
Phone: 919-461-1100

ELECTRICAL AND PROGRAMMING DETAILS FOR:

Prepared for the Offices of:
Traffic Engineering Mobility and Safety Division
Signals Management Section
750 N.Greenfield Pkwy,Garner,NC 27529

US 401 (Louisburg Road)
at
SR 2224 (Mitchell Mill Road)

Division 5 | Wake County | Raleigh

PLAN DATE:	Jan 2023	REVIEWED BY:	H.M. Surti
PREPARED BY:	A. Ravipati	REVIEWED BY:	

REVISIONS	INIT.	DATE

SEAL
NORTH CAROLINA PROFESSIONAL SEAL 034481 ENGINEER HEMANG M. SURTI

DocuSigned by: Hemang M. Surti AF12B8DC7A5A41... 1/24/2023

SIG. INVENTORY NO. 05-1982T2

1/24/2023
pw://aecom-na-pw.bentley.com:AECOM_DS21_NA_2020\Documents\60609754-U-5748 Lion Mill\900-CAD GIS\910_CAD\70_NCDOT_TIP\Traffic\Signals\Design\Signals\Electrical Details.2022\05198212_sm.ele.2022XXXX.dgn
michael.cavenaugh

DocuSign Envelope ID: EE0A9FB1-617B-4D0E-A869-87C1A84AA294

PROJECT REFERENCE NO.	SHEET NO.
U-5748	Sig. 10.2

OVERLAP PROGRAMMING FOR OVERLAPS A & C

1. From Main Menu select **4 - UNIT DATA**
2. From UNIT DATA Submenu select **3 - OVERLAP DATA**

Use Up/Dn/Left/Right keys to position cursor on the desired Overlap. Use the NEXT key to select the overlap type. Press the ENT key and then program as per the Overlap screen(s) shown.

```
OVERLAP DATA

   A: STD   E: ---   I: ---   M: ---
   B: ---   F: ---   J: ---   N: ---
   C: STD   G: ---   K: ---   O: ---
   D: ---   H: ---   L: ---   P: ---

 PREV/NEXT TO CYCLE
```

OVERLAP A

Use Up/Dn/Left/Right keys to position cursor on Overlap 'A', use the NEXT key to select 'STD', then press ENT

```
OVERLAP - A       12345678 90123456
         PARENTS: 10000001 00000000
     +GRN PHASES: 00000000 00000000
     -G/Y PHASES: 00000000 00000000
     -PED PHASES: 00000000 00000000
 TRAIL GREEN STANDARD:   0  YEL/10:  40
 TRAIL GREEN  PREEMPT:   0  YEL/10:  20
```

Press ESC

OVERLAP C

Use Up/Dn/Left/Right keys to position cursor on Overlap 'C', use the NEXT key to select 'STD', then press ENT

```
OVERLAP - C       12345678 90123456
         PARENTS: 01000001 00000000
     +GRN PHASES: 00000000 00000000
     -G/Y PHASES: 00000000 00000000
     -PED PHASES: 00000000 00000000
 TRAIL GREEN STANDARD:   0  YEL/10:  40
 TRAIL GREEN  PREEMPT:   0  YEL/10:  20
```

END OVERLAP PROGRAMMING

FLASHER CIRCUIT MODIFICATION DETAIL

IN ORDER TO INSURE THAT SIGNALS FLASH CONCURRENTLY ON THE SAME APPROACH, MAKE THE FOLLOWING FLASHER CIRCUIT CHANGES:

1. ON REAR OF PDA - REMOVE WIRE FROM TERM. T2-4 AND TERMINATE ON T2-2.
2. ON REAR OF PDA - REMOVE WIRE FROM TERM. T2-5 AND TERMINATE ON T2-3.
3. REMOVE FLASHER UNIT 2.

THE CHANGES LISTED ABOVE TIES ALL PHASES AND OVERLAPS TO FLASHER UNIT 1.

THIS ELECTRICAL DETAIL IS FOR
THE SIGNAL DESIGN: 05-1982T2
DESIGNED: Jan 2023
SEALED: 1/24/2023
REVISED:

Temporary Design 2 (TMP Phase III)
Electrical Detail - Sheet 2 of 2

DOCUMENT NOT CONSIDERED FINAL UNLESS ALL SIGNATURES COMPLETED

AECOM
NC Firm License No.: F-0342
5438 Wade Park Boulevard
Suite 200 Raleigh, NC 27607
Phone: 919-461-1100

ELECTRICAL AND PROGRAMMING DETAILS FOR:

Prepared for the Offices of:
Traffic Engineering Branch, Mobility and Safety Division, Department of Transportation, State of North Carolina, Signals Management Section
750 N.Greenfield Pkwy,Garner,NC 27529

US 401 (Louisburg Road)
at
SR 2224 (Mitchell Mill Road)

Division 5 | Wake County | Raleigh

PLAN DATE:	Jan 2023	REVIEWED BY:	H.M. Surti
PREPARED BY:	A. Ravipati	REVIEWED BY:	

REVISIONS	INIT.	DATE

SEAL
NORTH CAROLINA PROFESSIONAL SEAL 034481 ENGINEER HEMANG M. SURTI

DocuSigned by: Hemang M. Surti 1/24/2023
AF12B8DC7A5A41...

SIG. INVENTORY NO. 05-1982T2

1/24/2023
pw:\\aecom-na-pw.bentley.com:AECOM_DS21_NA_2020\Documents\60609754-U-5748 Ligon Mill\900-CAD GIS\910_CAD\70_NCDOT_TIP\Traffic\Signals\Design\Signals\Electrical Details.2022\05198272_sm.ele.2022XXXX.dgn
michael.cavenaugh

DocuSign Envelope ID: EE0A9FB1-617B-4D0E-A869-87C1A84AA294

PROJECT REFERENCE NO.	SHEET NO.
U-5748	Sig. 11.0

PHASING DIAGRAM

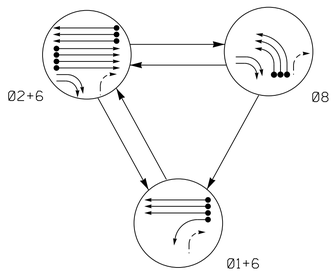

TABLE OF OPERATION

SIGNAL FACE	PHASE 01+6	PHASE 02+6	PHASE 08	FLASH
11	←	~~R~~	~~R~~	~~R~~
21	R	↑	R	Y
22,23,24,25	R	G	R	Y
26, 27	R	↗	↗	~~Y~~
28	R	→	→	~~Y~~
61, 62, 63	G	G	R	Y
81, 82, 83	~~R~~	~~R~~	←	~~R~~

SIGNAL FACE I.D.

All Heads L.E.D.

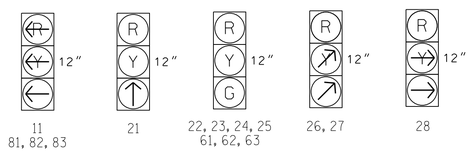

SE-PAC 2070 LOOP & DETECTOR UNIT INSTALLATION CHART

INDUCTIVE LOOPS						DETECTOR PROGRAMMING														
							TIMING		OPERATION MODE									STATUS	
ZONE NO.	SIZE (ft)	TURNS	DIST. FROM STOPBAR (ft)	NEW	EXISTING	ASSIGNED PHASE	DELAY	EXTEND (STRETCH)	0 VEHICLE	1 PEDESTRIAN	2 1 CALL	3 STOP A	4 STOP B	5 FOOTPER LEFT	6 FOOTPER THROUGH	7 AND	SWITCH SYSTEM LOOPS	NEW	EXISTING
1A✳	6X40	✳	0	✳	-	1	- SEC.	- SEC.	X	-	-	-	-	-	-	-	-	✳	-
2A✳	6X6	✳	355	✳	-	2	- SEC.	- SEC.	X	-	-	-	-	-	-	-	-	✳	-
2B✳	6X6	✳	355	✳	-	2	- SEC.	- SEC.	X	-	-	-	-	-	-	-	-	✳	-
2C✳	6X6	✳	355	✳	-	2	- SEC.	- SEC.	X	-	-	-	-	-	-	-	-	✳	-
2D✳	6X6	✳	355	✳	-	2	- SEC.	- SEC.	X	-	-	-	-	-	-	-	-	✳	-
6A✳	6X6	✳	355	✳	-	6	- SEC.	- SEC.	X	-	-	-	-	-	-	-	-	✳	-
6B✳	6X6	✳	355	✳	-	6	- SEC.	- SEC.	X	-	-	-	-	-	-	-	-	✳	-
6C✳	6X6	✳	355	✳	-	6	- SEC.	- SEC.	X	-	-	-	-	-	-	-	-	✳	-
8A✳	6X40	✳	0	✳	-	8	- SEC.	- SEC.	X	-	-	-	-	-	-	-	-	✳	-
8B✳	6X40	✳	0	✳	-	8	- SEC.	- SEC.	X	-	-	-	-	-	-	-	-	✳	-
8C✳	6X40	✳	0	✳	-	8	- SEC.	- SEC.	X	-	-	-	-	-	-	-	-	✳	-

✳ Video Detection Zone

3 Phase
Fully Actuated
(Raleigh Signal System)

NOTES

1. Refer to "Roadway Standard Drawings NCDOT" dated January 2018 and "Standard Specifications for Roads and Structures" dated January 2018.
2. Do not program signal for late night flashing operation unless otherwise directed by the Engineer.
3. Phase 1 may be lagged.
4. Reposition existing signal heads numbered 11, 21, 22, 24, 61, 62, 63, 81, 82, and 83.
5. Reposition existing sign Ⓐ.
6. Remove existing signal head numbered 84.
7. Set all detector units to presence mode.
8. This intersection uses video detection. Install detectors according to the manufacturer's instructions to achieve the desired detection.
9. Maximum times shown in timing chart are for free-run operation only. Coordinated signal system timing values supersede these values.
10. Program phase 4 as a dummy phase for Ring 1.

PHASING DIAGRAM DETECTION LEGEND

- DETECTED MOVEMENT
- UNDETECTED MOVEMENT (OVERLAP)
- UNSIGNALIZED MOVEMENT
- PEDESTRIAN MOVEMENT

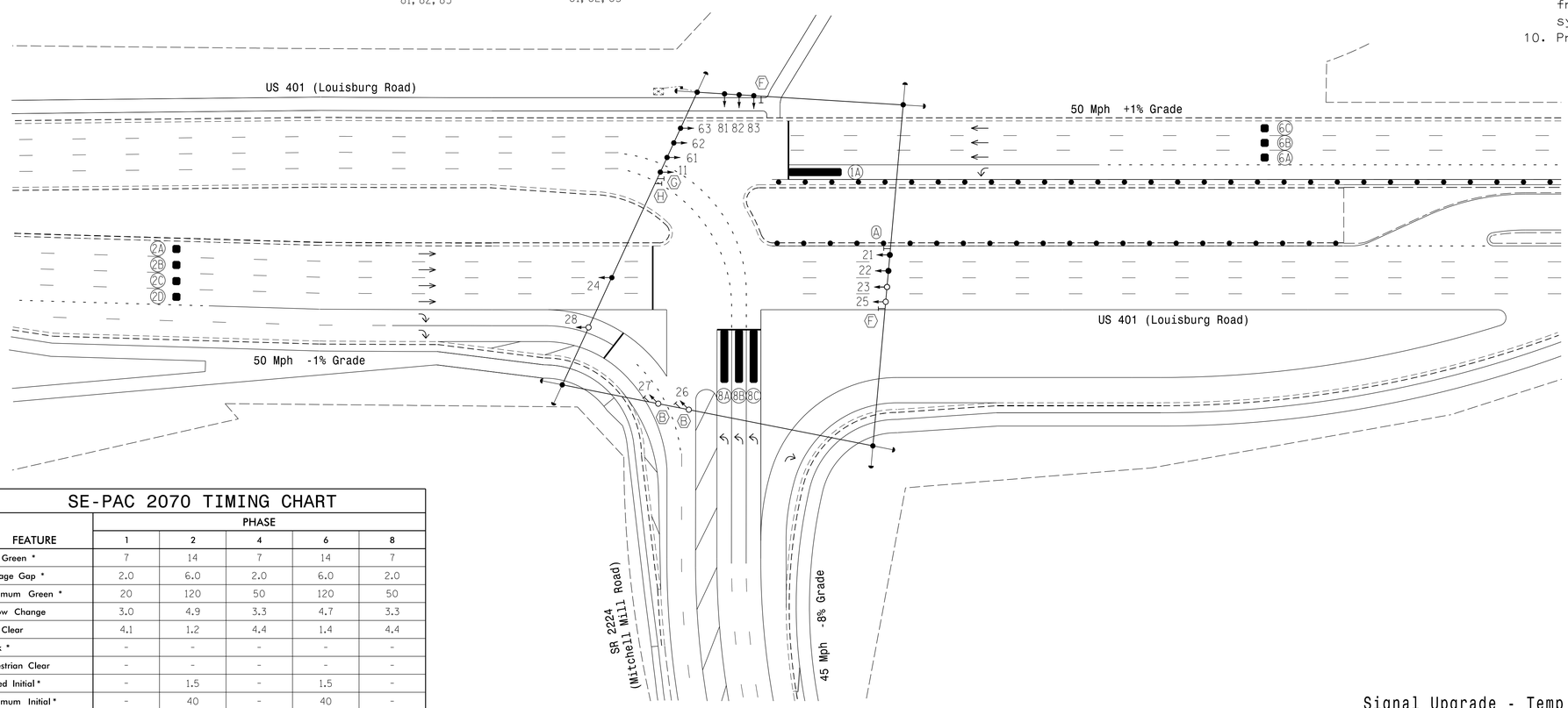

LEGEND

PROPOSED		EXISTING
	Traffic Signal Head	
	Modified Signal Head	N/A
	Sign	
	Pedestrian Signal Head	
	Signal Pole with Guy	
	Signal Pole with Sidewalk Guy	
	Inductive Loop Detector	
	Controller & Cabinet	
	Junction Box	
	2-in Underground Conduit	
N/A	Right of Way	
	Directional Arrow	
	Video Detection Zone	
	Construction Zone	
	Construction Zone Drums	
Ⓐ	"NO U-TURN/NO LEFT TURN" Sign (R3-18)	Ⓐ
Ⓑ	"NO TURN ON RED" Sign (R10-11)	Ⓑ
Ⓕ	No Right Turn Sign (R3-1)	Ⓕ
Ⓖ	No U-Turn Sign (R3-4)	Ⓒ
Ⓗ	Left Arrow "ONLY" Sign (R3-5L)	Ⓗ

SE-PAC 2070 TIMING CHART

FEATURE	PHASE 1	PHASE 2	PHASE 4	PHASE 6	PHASE 8
Min Green *	7	14	7	14	7
Passage Gap *	2.0	6.0	2.0	6.0	2.0
Maximum Green *	20	120	50	120	50
Yellow Change	3.0	4.9	3.3	4.7	3.3
Red Clear	4.1	1.2	4.4	1.4	4.4
Walk *	-	-	-	-	-
Pedestrian Clear	-	-	-	-	-
Added Initial *	-	1.5	-	1.5	-
Maximum Initial *	-	40	-	40	-
Time Before Reduction *	-	20	-	20	-
Time To Reduce *	-	40	-	40	-
Minimum Gap	-	3.0	-	3.0	-
Recall Mode	-	MIN RECALL	-	MIN RECALL	-
Vehicle Call Memory	NON-LOCK	LOCK	NON-LOCK	LOCK	NON-LOCK
Dual Entry	-	-	-	-	-
Simultaneous Gap	ON	ON	ON	ON	ON

* These values may be field adjusted. Do not adjust Min Green and Extension times for phases 2 and 6 lower than what is shown. Min Green for all other phases should not be lower than 4 seconds.

Signal Upgrade - Temp Design 3 (TMP Phase IV)

AECOM
NC Firm License No.: F-0342
701 Corporate Center Drive
Suite 475 Raleigh, NC 27607
Phone: 919-854-6200

Prepared for the Offices of:
Transportation Mobility and Safety Division
Signal Design Section
750 N.Greenfield Pkwy,Garner,NC 27529

SCALE 0 50 1"=50'

US 401 (Louisburg Road) at SR 2224 (Mitchell Mill Road)

Division 5 Wake County Raleigh

PLAN DATE: Jan 2023 REVIEWED BY: F.A. Campbell
PREPARED BY: H.M. Surti REVIEWED BY:

REVISIONS	INIT.	DATE

DOCUMENT NOT CONSIDERED FINAL UNLESS ALL SIGNATURES COMPLETED

SEAL
NORTH CAROLINA PROFESSIONAL SEAL 034481 ENGINEER HEMANG M. SURTI

DocuSigned by: Hemang M. Surti 1/24/2023
E5120B0A7A5A41...

SIG. INVENTORY NO. 05-198273

1/24/2023
pw:\\aecomnaosp.bentley.com:AECOM_DS21_NA_2020\Documents\60609754\U-5748 Ligon Mill\900-CAD GIS\910_CAD\70_NCDOT_TIP\Traffic\Signals\Design\Signals\05198273_sig_dsn_2022XXXX.dgn
michael.cavenaugh

DocuSign Envelope ID: EE0A9FB1-617B-4D0E-A869-87C1A84AA294

PROJECT REFERENCE NO.	SHEET NO.
U-5748	Sig. 11.1

18 CHANNEL CONFLICT MONITOR PROGRAMMING DETAIL

(remove jumpers and set switches as shown)

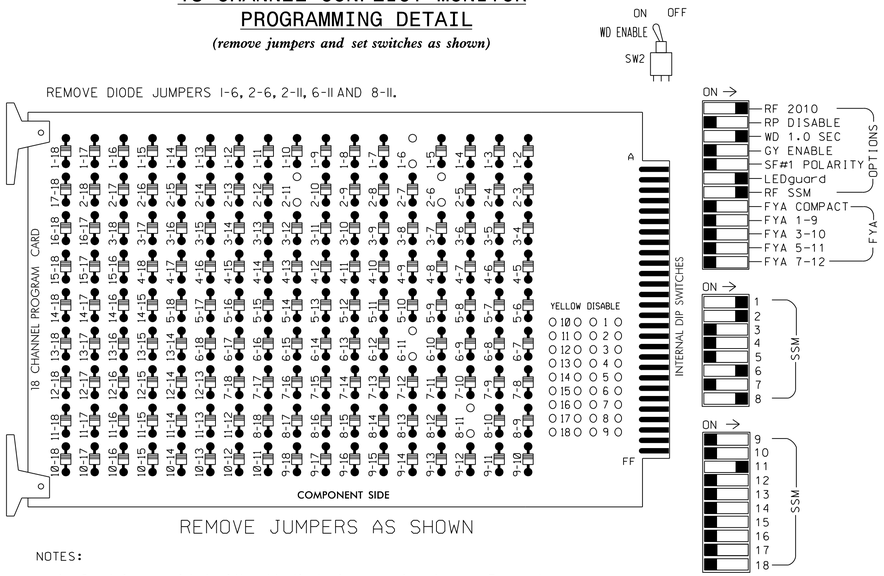

NOTES:

1. Card is provided with all diode jumpers in place. Removal of any jumper allows its channels to run concurrently.
2. Ensure jumpers SEL2-SEL5 and SEL9 are present on the monitor board.
3. Ensure that Red Enable is active at all times during normal operation.
4. Connect serial cable from conflict monitor to comm. port 1 of 2070 controller. Ensure conflict monitor communicates with 2070.

NOTES

1. To prevent "flash-conflict" problems, insert red flash program blocks for all unused vehicle load switches in the output file. The installer shall verify that signal heads flash in accordance with the Signal Plans.
2. Program controller to start up in phases 2 and 6 green.
3. Enable simultaneous gap-out feature, on controller unit, for all phases.
4. Program phases 2 and 6, on controller unit, for volume density operation.
5. The cabinet and controller are part of the Raleigh Signal System.

EQUIPMENT INFORMATION

CONTROLLER.....2070LX
CABINET.....332 W/ AUX
SOFTWARE.....SE-PAC2070
CABINET MOUNT.....BASE
OUTPUT FILE POSITIONS...18 WITH AUX. OUTPUT FILE
LOAD SWITCHES USED.....S1,S2,S8,S11,AUX S4
PHASES USED.....1,2,4*,6,8
OVERLAP "A".....NOT USED
OVERLAP "B".....NOT USED
OVERLAP "C".....**
OVERLAP "D".....NOT USED

* Phase used for timing purposes only.
** See this sheet for overlap programming.

SIGNAL HEAD HOOK-UP CHART

LOAD SWITCH NO.	S1	S2		S3	S4	S5	S6	S7	S8	S9	S10	S11	S12	AUX S1	AUX S2	AUX S3	AUX S4	AUX S5	AUX S6
CMU CHANNEL NO.	1	2		13	3	4	14	5	6	15	7	8	16	9	10	17	11	12	18
PHASE	1	2		2 PED	3	4	4 PED	5	6	6 PED	7	8	8 PED	OLA	OLB	SPARE	OLC	OLD	SPARE
SIGNAL HEAD NO.	11	21	22,23, 24,25	NU	NU	NC	NU	NU	61,62 63	NU	NU	81,82, 83	NU	NU	NU	NU	26,27, 28	NU	NU
RED		128	128						134								A114		
YELLOW		129	129						135										
GREEN			130						136										
RED ARROW	125											107							
YELLOW ARROW	126											108					A115		
GREEN ARROW	127	130										109					A116		

NU = Not Used
NC = Not Connected

OVERLAP PROGRAMMING FOR OVERLAP C

1. From Main Menu select 4 - UNIT DATA
2. From UNIT DATA Submenu select 3 - OVERLAP DATA

Use Up/Dn/Left/Right keys to position cursor on the desired Overlap. Use the NEXT key to select the overlap type. Press the ENT key and then program as per the Overlap screen(s) shown.

```
OVERLAP DATA

  A: ---   E: ---   I: ---   M: ---
  B: ---   F: ---   J: ---   N: ---
  C: STD   G: ---   K: ---   O: ---
  D: ---   H: ---   L: ---   P: ---

 PREV/NEXT TO CYCLE
```

OVERLAP C

Use Up/Dn/Left/Right keys to position cursor on Overlap 'C', use the NEXT key to select 'STD', then press ENT

```
OVERLAP - C        12345678 90123456
          PARENTS: 01000001 00000000
      +GRN PHASES: 00000000 00000000
      -G/Y PHASES: 00000000 00000000
      -PED PHASES: 00000000 00000000
 TRAIL GREEN STANDARD:   0  YEL/10:  40
 TRAIL GREEN  PREEMPT:   0  YEL/10:  20
```

END OVERLAP PROGRAMMING

INPUT FILE POSITION LAYOUT

(front view)

		1	2	3	4	5	6	7	8	9	10	11	12	13	14
FILE "I"	U	SLOT	SLOT	SLOT	SLOT	SLOT	SLOT	SLOT	SLOT	SLOT	SLOT	SLOT	SLOT	SLOT	FS DC ISOLATOR
	L	EMPTY	EMPTY	EMPTY	EMPTY	EMPTY	EMPTY	EMPTY	EMPTY	EMPTY	EMPTY	EMPTY	EMPTY	EMPTY	ST DC ISOLATOR
FILE "J"	U	SLOT	SLOT	SLOT	SLOT	SLOT	SLOT	SLOT	SLOT	SLOT	SLOT	SLOT	SLOT	SLOT	SLOT
	L	EMPTY	EMPTY	EMPTY	EMPTY	EMPTY	EMPTY	EMPTY	EMPTY	EMPTY	EMPTY	EMPTY	EMPTY	EMPTY	EMPTY

EX.: 1A, 2A, ETC. = LOOP NO.'S

FS = FLASH SENSE
ST = STOP TIME

INPUT FILE POSITION LEGEND: J2L
FILE J
SLOT 2
LOWER

SPECIAL DETECTOR NOTE

Install a video detection system for vehicle detection. Perform installation according to manufacturer's directions and NCDOT engineer-approved mounting locations to accomplish the detection schemes shown on the Signal Design Plans.

THIS ELECTRICAL DETAIL IS FOR
THE SIGNAL DESIGN: 05-1982T3
DESIGNED: Jan 2023
SEALED: 1/24/2023
REVISED:

AECOM
NC Firm License No.: F-0342
5438 Wade Park Boulevard
Suite 200 Raleigh, NC 27607
Phone: 919-461-1100

Temporary Design 3 (TMP Phase IV)
Electrical Detail

DOCUMENT NOT CONSIDERED FINAL UNLESS ALL SIGNATURES COMPLETED

ELECTRICAL AND PROGRAMMING DETAILS FOR:

Prepared for the Offices of:
Traffic Engineering & Signal Management Section
NC Department of Transportation Mobility and Safety Division
750 N.Greenfield Pkwy,Garner,NC 27529

US 401 (Louisburg Road)
at
SR 2224 (Mitchell Mill Road)

Division 5 | Wake County | Raleigh

PLAN DATE:	Jan 2023	REVIEWED BY:	H.M. Surti
PREPARED BY:	A. Ravipati	REVIEWED BY:	

REVISIONS	INIT.	DATE

SEAL
NORTH CAROLINA PROFESSIONAL SEAL 034481 ENGINEER HEMANG M. SURTI

DocuSigned by: Hemang M. Surti AE1D8DDC7A5A41... 1/24/2023

SIG. INVENTORY NO. 05-1982T3

1/24/2023
pw:\\aecom-na-pw.bentley.com:AECOM_DS21_NA_2020\Documents\60609754-U-5748 Ligon Mill\900-CAD GIS\910_CAD\70_NCDOT_TIP\Traffic\Signals\Design\Signals\Electrical Details_2022\05198213_sm_ele_2022XXXX.dgn
michael.cavenaugh

DocuSign Envelope ID: EE0A9FB1-617B-4D0E-A869-87C1A84AA294

PROJECT REFERENCE NO.	SHEET NO.
U-5748	Sig. 12.0

PHASING DIAGRAM

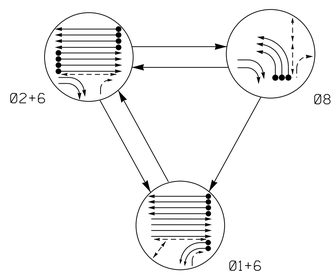

TABLE OF OPERATION

SIGNAL FACE	PHASE Ø1+6	PHASE Ø2+6	PHASE Ø8	PHASE FLASH
11, 12	←-	-R	-R	-R
21,22,23,24	↑	↑	R	Y
25, 26	↗	↗	↗	↗
27	R→	→-	→-	Y→
61,62,63,64	↑	↑	R	Y
81, 82, 83	-R	-R	←-	-R
P11, P12	W	DW	DW	DRK
P21, P22	W	W	DW	DRK
P81, P82 P83, P84 P85, P86	DW	DW	W	DRK

SE-PAC 2070 LOOP & DETECTOR UNIT INSTALLATION CHART

INDUCTIVE LOOPS						DETECTOR PROGRAMMING													
							TIMING		OPERATION MODE									STATUS	
LOOP NO.	SIZE (ft)	TURNS	DIST. FROM STOPBAR (ft)	NEW	EXISTING	ASSIGNED PHASE	DELAY	EXTEND (STRETCH)	0 VEHICLE	1 PEDESTRIAN	2 1 CALL	3 STOP A	4 STOP B	5 PROTFFER	6 LEFT PROTFFER THROUGH	7 AND	SWITCH SYSTEM LOOPS	NEW	EXISTING
1A	6X40	2-4-2	0	X	-	1	- SEC.	- SEC.	X	-	-	-	-	-	-	-	-	X	-
1B	6X40	2-4-2	0	X	-	1	- SEC.	- SEC.	X	-	-	-	-	-	-	-	-	X	-
2A	6X6	5	355	X	-	2	- SEC.	- SEC.	X	-	-	-	-	-	-	-	-	X	-
2B	6X6	5	355	X	-	2	- SEC.	- SEC.	X	-	-	-	-	-	-	-	-	X	-
2C	6X6	5	355	X	-	2	- SEC.	- SEC.	X	-	-	-	-	-	-	-	-	X	-
2D	6X6	5	355	X	-	2	- SEC.	- SEC.	X	-	-	-	-	-	-	-	-	X	-
6A	6X6	5	355	X	-	6	- SEC.	- SEC.	X	-	-	-	-	-	-	-	-	X	-
6B	6X6	5	355	X	-	6	- SEC.	- SEC.	X	-	-	-	-	-	-	-	-	X	-
6C	6X6	5	355	X	-	6	- SEC.	- SEC.	X	-	-	-	-	-	-	-	-	X	-
6D	6X6	5	355	X	-	6	- SEC.	- SEC.	X	-	-	-	-	-	-	-	-	X	-
8A	6X40	2-4-2	0	X	-	8	- SEC.	- SEC.	X	-	-	-	-	-	-	-	-	X	-
8B	6X40	2-4-2	0	X	-	8	- SEC.	- SEC.	X	-	-	-	-	-	-	-	-	X	-
8C	6X40	2-4-2	0	X	-	8	- SEC.	- SEC.	X	-	-	-	-	-	-	-	-	X	-

3 Phase
Fully Actuated
(Raleigh Signal System)

NOTES

1. Refer to "Roadway Standard Drawings NCDOT" dated January 2018 and "Standard Specifications for Roads and Structures" dated January 2018.
2. Do not program signal for late night flashing operation unless otherwise directed by the Engineer.
3. Phase 1 may be lagged.
4. Set all detector units to presence mode.
5. Omit "WALK" and flashing "DON'T WALK" with no pedestrian calls.
6. Program pedestrian heads to countdown the flashing "Don't Walk" time only.
7. Maximum times shown in timing chart are for free-run operation only. Coordinated signal system timing values supersede these values.
8. Program phase 4 as dummy phase for Ring 1.
9. Phase 8 pedestrian timing is designed as a 2 stage crossing. The FDW time shown is only intended to get a pedestrian to/from the median during a single crossing. Install R10-3D signs as appropriate.

PHASING DIAGRAM DETECTION LEGEND

- DETECTED MOVEMENT
- UNDETECTED MOVEMENT (OVERLAP)
- UNSIGNALIZED MOVEMENT
- PEDESTRIAN MOVEMENT

SIGNAL FACE I.D.

All Heads L.E.D.

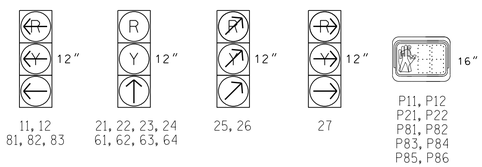

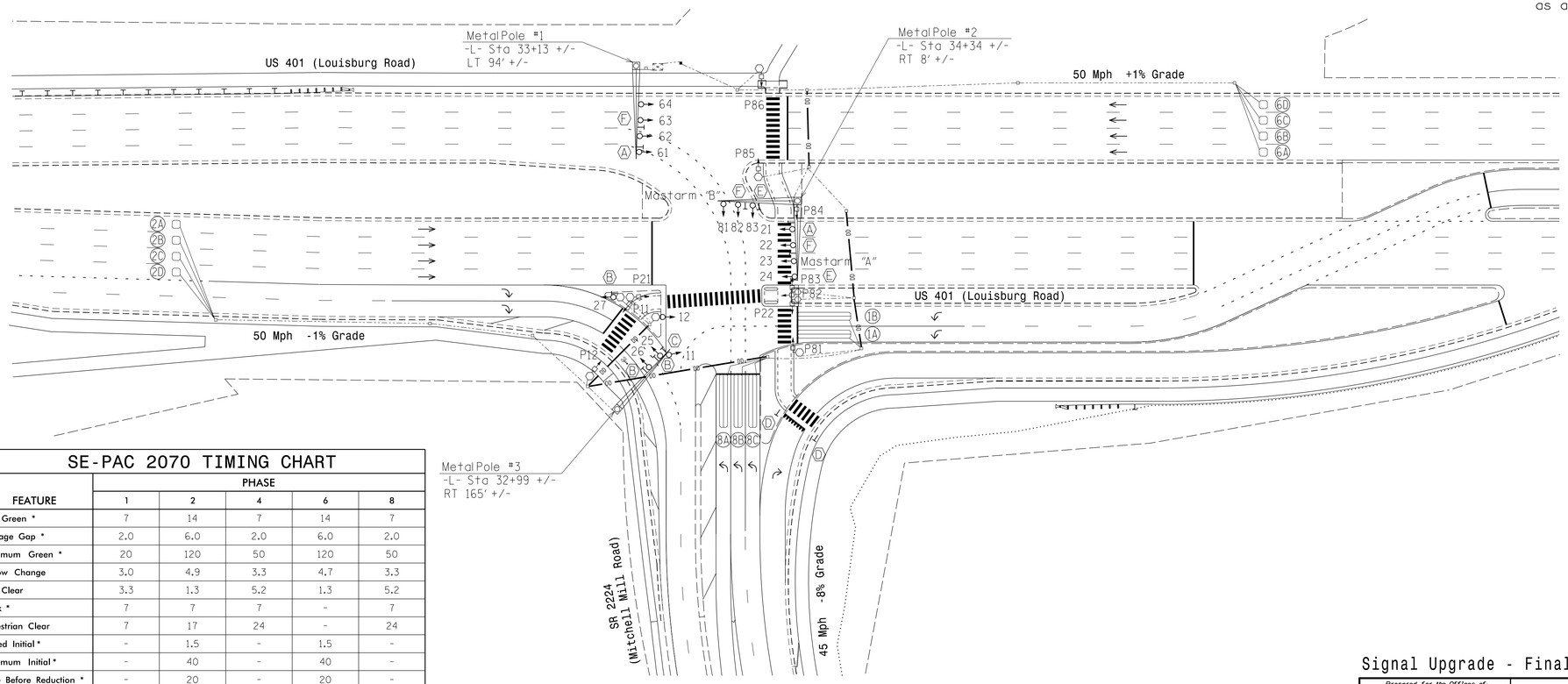

LEGEND

PROPOSED		EXISTING
	Traffic Signal Head	
	Modified Signal Head	N/A
	Sign	
	Pedestrian Signal Head	
	Signal Pole with Guy	
	Signal Pole with Sidewalk Guy	
	Inductive Loop Detector	
	Controller & Cabinet	
	Junction Box	
	2-in Underground Conduit	
N/A	Right of Way	
	Directional Arrow	
	Type II Signal Pedestal	
N/A	Curb Ramp	
DD	Directional Drill	N/A
	Metal Pole with Mastarm	
N/A	Noise Wall	
N/A	Guardrail	
Ⓐ	"NO U-TURN/NO LEFT TURN" Sign (R3-18)	Ⓐ
Ⓑ	"NO TURN ON RED" Sign (R10-11)	Ⓑ
Ⓒ	No Left Turn Sign (R3-2)	Ⓒ
Ⓓ	Pedestrian Crossing Sign (W11-2) w/ Downward Diagonal Arrow Plaque (W16-7P)	Ⓓ
Ⓔ	No Right Turn Sign (R3-1)	Ⓔ
Ⓕ	Street Name Sign By Others (D3-1)	Ⓕ

SE-PAC 2070 TIMING CHART

FEATURE	PHASE 1	PHASE 2	PHASE 4	PHASE 6	PHASE 8
Min Green *	7	14	7	14	7
Passage Gap *	2.0	6.0	2.0	6.0	2.0
Maximum Green *	20	120	50	120	50
Yellow Change	3.0	4.9	3.3	4.7	3.3
Red Clear	3.3	1.3	5.2	1.3	5.2
Walk *	7	7	7	-	7
Pedestrian Clear	7	17	24	-	24
Added Initial *	-	1.5	-	1.5	-
Maximum Initial *	-	40	-	40	-
Time Before Reduction *	-	20	-	20	-
Time To Reduce *	-	40	-	40	-
Minimum Gap	-	3.0	-	3.0	-
Recall Mode	-	MIN RECALL	-	MIN RECALL	-
Vehicle Call Memory	NON-LOCK	LOCK	NON-LOCK	LOCK	NON-LOCK
Dual Entry	-	-	-	-	-
Simultaneous Gap	ON	ON	ON	ON	ON

* These values may be field adjusted. Do not adjust Min Green and Extension times for phases 2 and 6 lower than what is shown. Min Green for all other phases should not be lower than 4 seconds.

AECOM
NC Firm License No.: F-0342
701 Corporate Center Drive
Suite 475 Raleigh, NC 27607
Phone: 919-854-6200

Signal Upgrade - Final Design

Prepared for the Offices of:
Transportation Mobility and Safety Division
STATE OF NORTH CAROLINA DEPARTMENT OF TRANSPORTATION
Signal Design Section
750 N.Greenfield Pkwy,Garner,NC 27529

US 401 (Louisburg Road)
at
SR 2224 (Mitchell Mill Road)

Division 5 Wake County Raleigh

PLAN DATE:	Jan 2023	REVIEWED BY:	F.A. Campbell
PREPARED BY:	H.M. Surti	REVIEWED BY:	

SCALE 0 50 1"=50'

REVISIONS	INIT.	DATE

DOCUMENT NOT CONSIDERED FINAL UNLESS ALL SIGNATURES COMPLETED

SEAL
NORTH CAROLINA PROFESSIONAL SEAL 034481 ENGINEER HEMANG M. SURTI

DocuSigned by:
Hemang M. Surti 1/24/2023
E6139B0C7A5A4F1...
SIG. INVENTORY NO. 05-1982

1/24/2023
pw:\\aecom-na-pw.bentley.com:AECOM_DS21_NA_2020\Documents\60609754\U-5748 Ligon Mill\900-CAD GIS\910_CAD\70_NCDOT_TIP\Traffic\Signals\Design\Signals\05198_sig_dsn_2022XXXX.dgn
michael.cavenaugh

DocuSign Envelope ID: EE0A9FB1-617B-4D0E-A869-87C1A84AA294

PROJECT REFERENCE NO.	SHEET NO.
U-5748	Sig. 12.1

18 CHANNEL CONFLICT MONITOR PROGRAMMING DETAIL

(remove jumpers and set switches as shown)

REMOVE DIODE JUMPERS I-2, I-6, I-13, I-15, 2-6, 2-11, 2-13, 2-15, 6-11, 6-13, 6-15, 8-11, 8-16, 11-13, 11-16 AND 13-15.

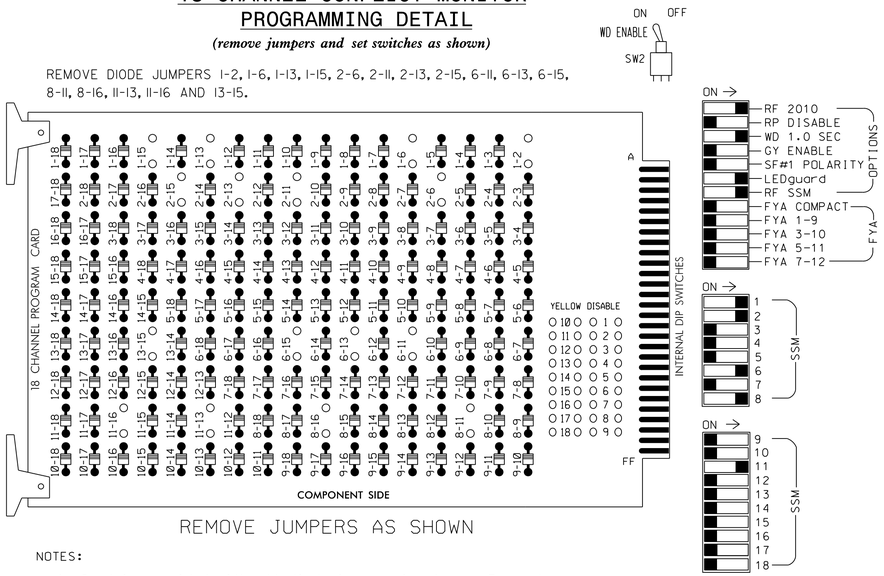

REMOVE JUMPERS AS SHOWN

NOTES:

1. Card is provided with all diode jumpers in place. Removal of any jumper allows its channels to run concurrently.
2. Ensure jumpers SEL2-SEL5 and SEL9 are present on the monitor board.
3. Ensure that Red Enable is active at all times during normal operation.
4. Connect serial cable from conflict monitor to comm. port 1 of 2070 controller. Ensure conflict monitor communicates with 2070.

NOTES

1. To prevent "flash-conflict" problems, insert red flash program blocks for all unused vehicle load switches in the output file. The installer shall verify that signal heads flash in accordance with the Signal Plans.
2. Program controller to start up in phases 2 and 6 green.
3. Enable simultaneous gap-out feature, on controller unit, for all phases.
4. Program phases 2 and 6, on controller unit, for volume density operation.
5. The cabinet and controller are part of the Raleigh Signal System.

EQUIPMENT INFORMATION

CONTROLLER.....2070LX
CABINET.....332 W/ AUX
SOFTWARE.....SE-PAC2070
CABINET MOUNT.....BASE
OUTPUT FILE POSITIONS...18 WITH AUX. OUTPUT FILE
LOAD SWITCHES USED.....S1,S2,S3,S8,S9,S11,S12,AUX S4
PHASES USED.....1,1PED,2,2PED,4*,6,8,8PED
OVERLAP "A".....NOT USED
OVERLAP "B".....NOT USED
OVERLAP "C".....**
OVERLAP "D".....NOT USED
OVERLAP "G".....**

* Phase used for timing puposes only.
** See Sheet 2 for Overlap programming.

SIGNAL HEAD HOOK-UP CHART

LOAD SWITCH NO.	S1	S2	S3	S4	S5	S6	S7	S8	S9	S10	S11	S12	AUX S1	AUX S2	AUX S3	AUX S4	AUX S5	AUX S6
CMU CHANNEL NO.	1	2	13	3	4	14	5	6	15	7	8	16	9	10	17	11	12	18
PHASE	1	OLG	2 PED	3	4	4 PED	5	6	1 PED	7	8	8 PED	OLA	OLB	SPARE	OLC	OLD	SPARE
SIGNAL HEAD NO.	11,12	21,22, 23,24	P21, P22	NU	NC	NU	NU	61,62, 63,64	P11, P12	NU	81,82, 83	P81,P82 P83,P84 P85,P86	NU	NU	NU	25,26, 27	NU	NU
RED		128						134										
YELLOW		129						135										
GREEN																		
RED ARROW	125										107					A114		
YELLOW ARROW	126										108					A115		
GREEN ARROW	127	130						136			109					A116		
✋			113						119			110						
🚶			115						121			112						

NU = Not Used
NC = Not Connected

COUNTDOWN PEDESTRIAN SIGNAL OPERATION

Countdown Ped Signals are required to display timing only during Ped Clearance Interval. Consult Ped Signal Module user's manual for instructions on selecting this feature.

INPUT FILE POSITION LAYOUT

(front view)

		1	2	3	4	5	6	7	8	9	10	11	12	13	14
FILE "I"	U	Ø1 1A	Ø2 2A	Ø2 2C	SLOT EMPTY	SLOT EMPTY	SLOT EMPTY	SLOT EMPTY	SLOT EMPTY	SLOT EMPTY	SLOT EMPTY	SLOT EMPTY	Ø2 PED DC ISOLATOR	Ø1 PED DC ISOLATOR	FS DC ISOLATOR
	L	Ø1 1B	Ø2 2B	Ø2 2D									NOT USED	Ø8 PED DC ISOLATOR	ST DC ISOLATOR
FILE "J"	U	SLOT EMPTY	Ø6 6A	Ø6 6C	SLOT EMPTY	SLOT EMPTY	Ø8 8A	Ø8 8C	SLOT EMPTY	SLOT EMPTY	SLOT EMPTY	SLOT EMPTY	SLOT EMPTY	SLOT EMPTY	SLOT EMPTY
	L		Ø6 6B	Ø6 6D			Ø8 8B	NOT USED							

EX.: 1A, 2A, ETC. = LOOP NO.'S

FS = FLASH SENSE
ST = STOP TIME

INPUT FILE CONNECTION & PROGRAMMING CHART

LOOP NO.	LOOP TERMINAL	INPUT FILE POS.	PIN NO.	DETECTOR NO.	NEMA PHASE	DELAY TIME	EXTEND (STRETCH) TIME
1A	TB2-1,2	I1U	56	1	1		
1B	TB2-3,4	I1L	56	1	1		
2A	TB2-5,6	I2U	39	3	2		
2B	TB2-7,8	I2L	43	4	2		
2C	TB2-9,10	I3U	63	5	2		
2D	TB2-11,12	I3L	76	6	2		
6A	TB3-5,6	J2U	40	21	6		
6B	TB3-7,8	J2L	44	22	6		
6C	TB3-9,10	J3U	64	23	6		
6D	TB3-11,12	J3L	77	24	6		
8A	TB5-9,10	J6U	42	31	8		
8B	TB5-11,12	J6L	46	32	8		
8C	TB7-1,2	J7U	66	33	8		
PED PUSH BUTTONS							
P11,P12	TB8-7,9	I3U	68	PED 6	1 PED		
P21,P22	TB8-4,6	I2U	67	PED 2	2 PED		
P81,P82 P83,P84 P85,P86	TB8-8,9	I3L	70	PED 8	8 PED		

NOTE:
INSTALL DC ISOLATORS IN INPUT FILE SLOTS I12 AND I13.

INPUT FILE POSITION LEGEND: J2L
FILE J
SLOT 2
LOWER

THIS ELECTRICAL DETAIL IS FOR
THE SIGNAL DESIGN: 05-1982
DESIGNED: Jan 2023
SEALED: 1/24/2023
REVISED:

Final Design
Electrical Detail - Sheet 1 of 2

DOCUMENT NOT CONSIDERED FINAL UNLESS ALL SIGNATURES COMPLETED

ELECTRICAL AND PROGRAMMING DETAILS FOR:

Prepared for the Offices of:
NC Department of Transportation Mobility and Safety Division
Traffic Engineering & Signals Management Section
750 N.Greenfield Pkwy,Garner,NC 27529

US 401 (Louisburg Road)
at
SR 2224 (Mitchell Mill Road)

Division 5 Wake County Raleigh

PLAN DATE: Jan 2023	REVIEWED BY: H.M. Surti
PREPARED BY: A. Ravipati	REVIEWED BY:

REVISIONS	INIT.	DATE

SEAL
NORTH CAROLINA PROFESSIONAL SEAL 034481 ENGINEER HEMANG M. SURTI

DocuSigned by: Hemang M. Surti AE1DBB0A7A4A41... 1/24/2023

SIG. INVENTORY NO. 05-1982

AECOM
NC Firm License No.: F-0342
5438 Wade Park Boulevard
Suite 200 Raleigh, NC 27607
Phone: 919-461-1100

1/24/2023
pw:\\aecom-na-pw.bentley.com:AECOM_DS21_NA_2020\Documents\60609754-U-5748 Ligon Mill\900-CAD GIS\910_CAD\70_NCDOT_TIP\Traffic\Signals\Design\Signals\Electrical Details_2022\051982_sm_ele_2022XXXX.dgn
michael.cavenaugh

DocuSign Envelope ID: EE0A9FB1-617B-4D0E-A869-87C1A84AA294

PROJECT REFERENCE NO.	SHEET NO.
U-5748	Sig. 12.2

OVERLAP PROGRAMMING FOR OVERLAPS C & G

1. From Main Menu select [4 - UNIT DATA]
2. From UNIT DATA Submenu select [3 - OVERLAP DATA]

Use Up/Dn/Left/Right keys to position cursor on the desired Overlap. Use the NEXT key to select the overlap type. Press the ENT key and then program as per the Overlap screen(s) shown.

```
OVERLAP DATA

   A: ---   E: ---   I: ---   M: ---
   B: ---   F: ---   J: ---   N: ---
   C: STD   G: STD   K: ---   O: ---
   D: ---   H: ---   L: ---   P: ---

 PREV/NEXT TO CYCLE
```

OVERLAP C

Use Up/Dn/Left/Right keys to position cursor on Overlap 'C', use the NEXT key to select 'STD', then press ENT

```
OVERLAP - C        12345678 90123456
          PARENTS: 01000001 00000000
     +GRN PHASES:  00000000 00000000
     -G/Y PHASES:  00000000 00000000
     -PED PHASES:  00000000 00000000
 TRAIL GREEN STANDARD:   0  YEL/10:  40
 TRAIL GREEN  PREEMPT:   0  YEL/10:  20
```

Press ESC

↓

OVERLAP G

Use Up/Dn/Left/Right keys to position cursor on Overlap 'G', use the NEXT key to select 'STD', then press ENT

```
OVERLAP - G        12345678 90123456
          PARENTS: 11000000 00000000
     +GRN PHASES:  00000000 00000000
     -G/Y PHASES:  00000000 00000000
     -PED PHASES:  00000000 00000000
 TRAIL GREEN STANDARD:   0  YEL/10:  40
 TRAIL GREEN  PREEMPT:   0  YEL/10:  20
```

END OVERLAP PROGRAMMING

LOAD SWITCH MAPPING DETAIL

(program controller as shown below)

FROM MAIN MENU PRESS 4 (UNIT DATA)

```
UNIT DATA
 1-STARTUP & MISC.     6-SEQUENCES
 2-REMOTE FLASH        7-PORT 1/ITS DATA
 3-OVERLAP DATA        8-I/O MISC
 4-PEER-TO-PEER        9-OUTPUT MAPPING
 5-RING STRUCTURE      B-BANK SELECTION
                       C-COPY BANK
'+' DENOTES  BANKABLE UNIT DATA   [1]
```

```
OUTPUT MAPPING            EDIT MODE: LDSW
                           E-TOGGLE MODE
LDSW ..1.. ..2.. ..3.. ..4.. ..5.. ..6..
RED  PH1   OLG   PD2   PH3   PH4   PD4
YEL   -     -     -     -     -     -
GRN   -     -     -     -     -     -
FIO   1     2     3     4     5     6
PREV/NEXT TO CYCLE       D-DISPLAY COMPAT
```

USE ENTER AND NEXT KEYS TO MAP 'LDSW 9' AS 'PD1'

```
OUTPUT MAPPING            EDIT MODE: LDSW
                           E-TOGGLE MODE
LDSW ..7.. ..8.. ..9.. .10.. .11.. .12..
RED  PH5   PH6   PD1   PH7   PH8   PD8
YEL   -     -     -     -     -     -
GRN   -     -     -     -     -     -
FIO   7     8     9    10    11    12
PREV/NEXT TO CYCLE       D-DISPLAY COMPAT
```

```
OUTPUT MAPPING            EDIT MODE: LDSW
                           E-TOGGLE MODE
LDSW .13.. .14.. .15.. .16.. .17.. .18..
RED  OLA   OLB   SPARE OLC   OLD   SPARE
YEL   -     -     -     -     -     -
GRN   -     -     -     -     -     -
FIO   7     8     9    10    11    12
PREV/NEXT TO CYCLE       D-DISPLAY COMPAT
```

LOAD SWITCH MAPPING COMPLETE

PED DETECTOR ASSIGNMENT PROGRAMMING TO ASSIGN PHASE 1 TO PED DETECTOR 6

1. From Main Menu select [3 - PHASE DATA]
2. From PHASE DATA Submenu select [7 - DETECTOR DATA]
3. From DETECTOR DATA Submenu select [9-PED 1-8]
4. From DETECTOR CONFIG DATA Submenu select [8-PEDESTRIAN DET 6+]

ASSIGN PHASE 1 TO DETECTOR 6

```
PED DET 6     PHASE 12345678 90123456
 ASSIGNED PHASES....10000000 00000000
 SWITCH PHASES......00000000 00000000
   MODE   1    CALL   1    EXT/10   0
   VOLUME 0    PASS   0    DLY/10   0
   OCCUPY 0    ADDED  0    FAIL   255
   LOCK   0    QUEUE  0    QLIMIT   0
                                   [1]
```

PED DETECTOR PROGRAMMING COMPLETE

THIS ELECTRICAL DETAIL IS FOR
THE SIGNAL DESIGN: 05-1982
DESIGNED: Jan 2023
SEALED: 1/24/2023
REVISED:

Final Design
Electrical Detail - Sheet 2 of 2

DOCUMENT NOT CONSIDERED FINAL UNLESS ALL SIGNATURES COMPLETED

ELECTRICAL AND PROGRAMMING DETAILS FOR:

US 401 (Louisburg Road)
at
SR 2224 (Mitchell Mill Road)

Division 5 | Wake County | Raleigh

PLAN DATE:	Jan 2023	REVIEWED BY:	H.M. Surti
PREPARED BY:	A. Ravipati	REVIEWED BY:	

REVISIONS	INIT.	DATE

SEAL: NORTH CAROLINA PROFESSIONAL SEAL 034481 ENGINEER HEMANG M. SURTI

DocuSigned by: Hemang M. Surti 1/24/2023
AE1D8BDC7A5A41...
SIG. INVENTORY NO. 05-1982

Prepared for the Offices of: Traffic Engineering Branch, Signal Design Section, Mobility and Safety Division, NC Department of Transportation
750 N.Greenfield Pkwy,Garner,NC 27529

AECOM
NC Firm License No.: F-0342
5438 Wade Park Boulevard
Suite 200 Raleigh, NC 27607
Phone: 919-461-1100

1/24/2023
pw:\\aecom-na-pw.bentley.com:AECOM_DS21_NA_2020\Documents\60609754-U-5748 Ligon Mill\900-CAD GIS\910_CAD\70_NCDOT_TIP\Traffic\Signals\Design\Signals\Electrical Details_2022\051982_sm_ele_2022XXXX.dgn
michael.cavenaugh

DocuSign Envelope ID: EE0A9FB1-617B-4D0E-A869-87C1A84AA294

METAL POLE Nos. 1 and 3

PROJECT REFERENCE NO.	SHEET NO.
U-5748	Sig. 12.3

Design Loading for METAL POLE NO. 1

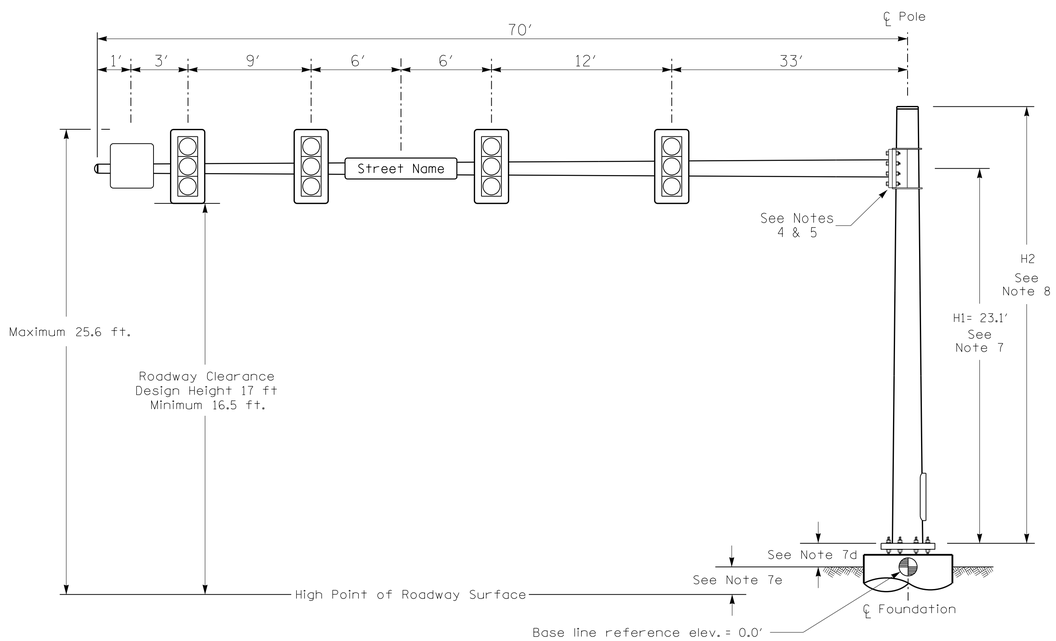

Elevation View

Design Loading for METAL POLE NO. 3

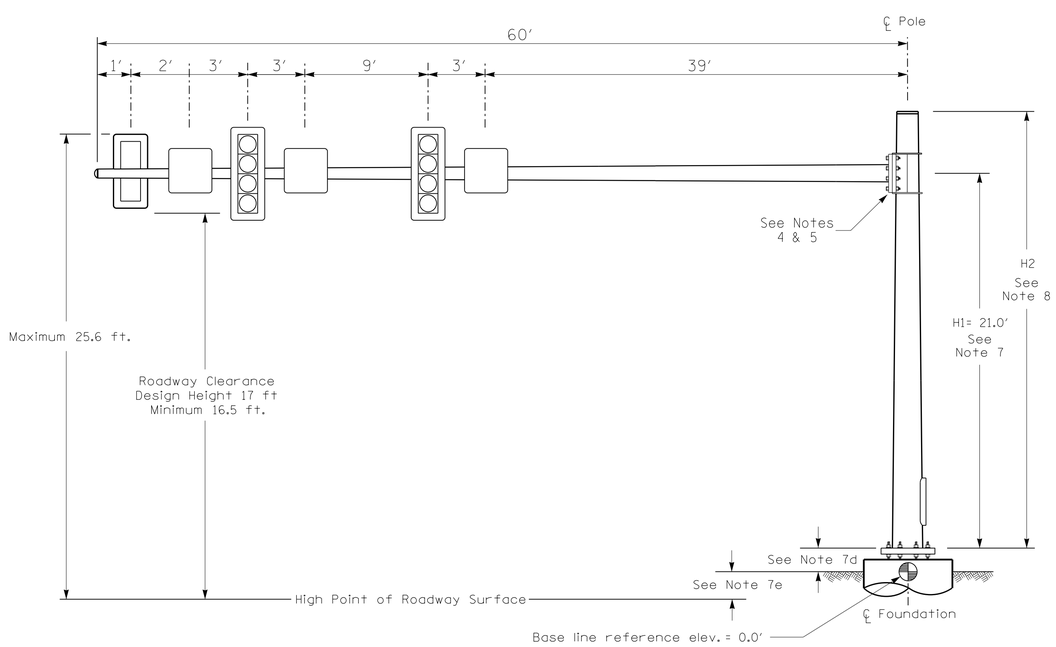

Elevation View

SPECIAL NOTE

The contractor is responsible for verifying that the mast arm attachment height (H1) will provide the "Design Height" clearance from the roadway before submitting final shop drawings for approval. Verify elevation data below which was obtained by field measurement or from available project survey data.

Elevation Data for Mast Arm Attachment (H1)

Elevation Differences for:	Pole 1	Pole 3
Baseline reference point at ℄ Foundation @ ground level	0.0 ft.	0.0 ft.
Elevation difference at High point of roadway surface	4.09 ft.	1.99 ft.
Elevation difference at Edge of travelway or face of curb	3.03 ft.	1.80 ft.

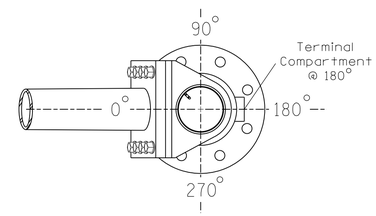

POLE RADIAL ORIENTATION

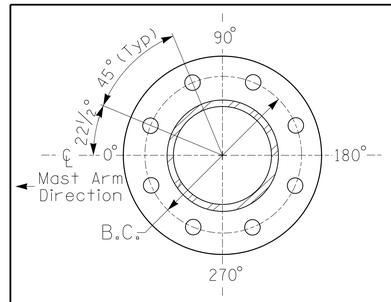

8 BOLT BASE PLATE DETAIL

See Note 6

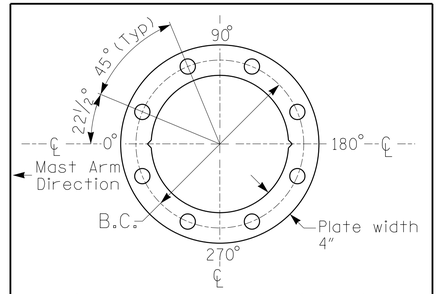

BASE PLATE TEMPLATE & ANCHOR BOLT LOCK PLATE DETAIL

For 8 Bolt Base Plate

MAST ARM LOADING SCHEDULE

LOADING SYMBOL	DESCRIPTION	AREA	SIZE	WEIGHT
	RIGID MOUNTED SIGNAL HEAD 12″-3 SECTION-WITH BACKPLATE	9.3 S.F.	25.5″ W X 52.5″ L	60 LBS
	RIGID MOUNTED SIGNAL HEAD 12″-4 SECTION-WITH BACKPLATE	11.5 S.F.	25.5″ W X 66.0″ L	74 LBS
	SIGN RIGID MOUNTED	9.0 S.F.	36.0″ W X 36.0″ L	17 LBS
Street Name	STREET NAME SIGN RIGID MOUNTED	12.0 S.F.	18.0″ W X 96.0″ L	27 LBS

NOTES

DESIGN REFERENCE MATERIAL

1. Design the traffic signal structure and foundation in accordance with:
   - The 6th Edition 2013 AASHTO "Standard Specifications for Structural Supports for Highway Signs, Luminaires, and Traffic Signals, including all of the latest interim revisions.
   - The 2018 NCDOT "Standard Specifications for Roads and Structures." The latest addenda to the specifications can be found in the traffic signal project special provisions.
   - The 2018 NCDOT Roadway Standard Drawings.
   - The traffic signal project plans and special provisions.
   - The NCDOT "Metal Pole Standards" located at the following NCDOT website: https://connect.ncdot.gov/resources/safety/Pages/ITS-Design-Resources.aspx

DESIGN REQUIREMENTS

2. Design the traffic signal structure using the loading conditions shown in the elevation views. These are anticipated worst case "design loads" and may not represent the actual loads that will be applied at the time of the installation. The contractor should refer to the traffic signal plans for the actual loads that will be applied at the time of the installation.
3. Design all signal supports using stress ratios that do not exceed 0.9.
4. The camber design for the mast arm deflection should provide an appearance of a low pitched arch where the tip or the free end of the mast arm does not deflect below horizontal when fully loaded.
5. A clamp-type bolted mast arm-to-pole connection may be used instead of the welded ring stiffened box connection shown as long as the connection meets all of the design requirements.
6. Design base plate with 8 anchor bolt holes. Provide 2 inch x 60 inch anchor bolts.
7. The mast arm attachment height (H1) shown is based on the following design assumptions:
   a. Mast arm slope and deflection are not considered in determining the arm attachment height as they are assumed to offset each other.
   b. Signal heads are rigidly mounted and vertically centered on the mast arm.
   c. The roadway clearance height for design is as shown in the elevation views.
   d. The top of the pole base plate is 0.75 feet above the ground elevation.
   e. Refer to the Elevation Data Chart for the elevation differences between the proposed foundation ground level and the high point of the roadway.
8. The pole manufacturer will determine the total height (H2) of each pole using the greater of the following:
   - Mast arm attachment height (H1) plus 2 feet, or
   - H1 plus 1/2 of the total height of the mast arm attachment assembly plus 1 foot.
9. If pole location adjustments are required, the contractor must gain approval from the Engineer as this may affect the mast arm lengths and arm attachment heights. The contractor may contact the Signal Design Section Senior Structural Engineer for assistance at (919) 814-5000.
10. The contractor is responsible for verifying that the mast arm length shown will allow proper positioning of the signal heads over the roadway.
11. The contractor is responsible for providing soil penetration testing data (SPT) to the pole manufacturer so site specific foundations can be designed.

AECOM
NC Firm License No.: F-0342
5438 Wade Park Boulevard
Suite 200 Raleigh, NC 27607
Phone: 919-461-1100

NCDOT Wind Zone 4 (90 mph)

DOCUMENT NOT CONSIDERED FINAL UNLESS ALL SIGNATURES COMPLETED

Prepared for the Offices of:
Transportation Mobility and Safety Division
STATE OF NORTH CAROLINA DEPARTMENT OF TRANSPORTATION
Signal Design Section
750 N.Greenfield Pkwy,Garner,NC 27529

SCALE 0 N/A N/A

US 401 (Louisburg Road) at SR 2224 (Mitchell Mill Road)

Division 5 Wake County Raleigh

PLAN DATE: Jan 2023 REVIEWED BY: F.A. Campbell
PREPARED BY: H.M. Surti REVIEWED BY:

REVISIONS	INIT.	DATE

SEAL
NORTH CAROLINA PROFESSIONAL SEAL 034481 ENGINEER HEMANG M. SURTI

DocuSigned by: Hemang M. Surti AF12B0B37A5481... 1/24/2023

SIG. INVENTORY NO. 05-1982

1/24/2023
pw:\\aecom-prod-pw.bentley.com:AECOM_DS21_NA_2020\Documents\60609754-U-5748 Ligon Mill\900-CAD GIS\910_CAD\TO_NCDOT_TIP\Traffic\Signals\Design\Signals\051982_sig_mp1_2022XXX.dgn
mhael.cavenaugh

DocuSign Envelope ID: EE0A9FB1-617B-4D0E-A869-87C1A84AA294

Design Loading for METAL POLE NO. 2, MAST ARM A

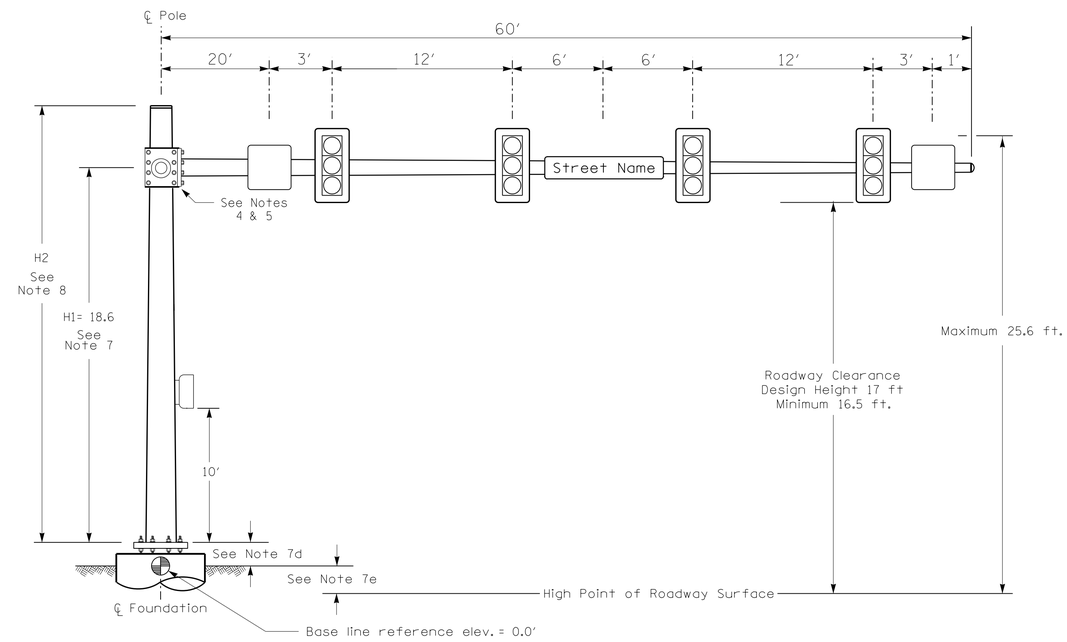

Design Loading for METAL POLE NO. 2, MAST ARM B

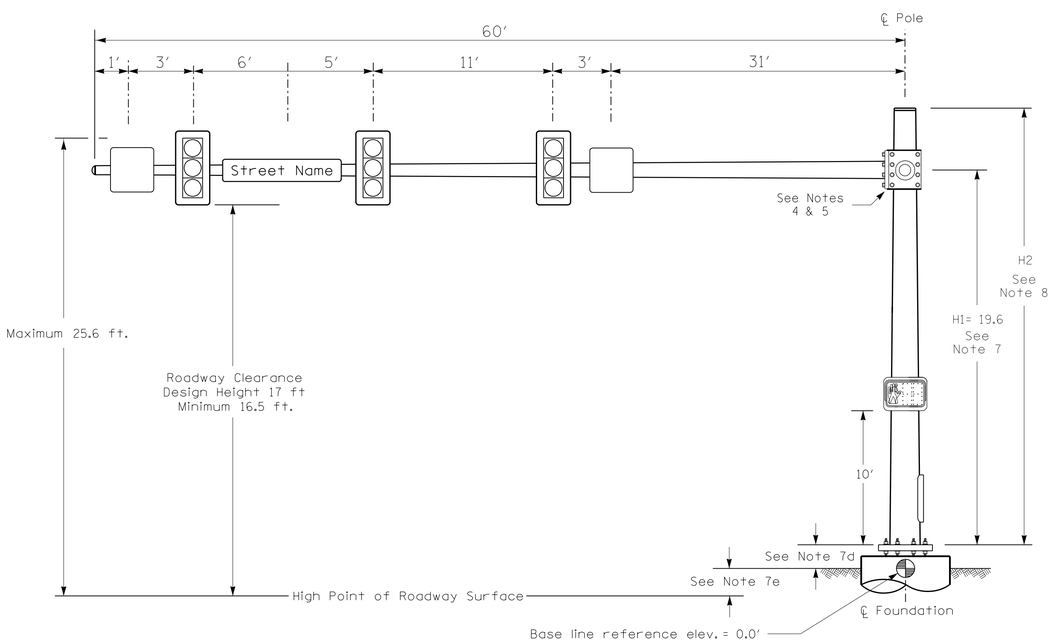

Elevation View

SPECIAL NOTE

The contractor is responsible for verifying that the mast arm attachment height (H1) will provide the "Design Height" clearance from the roadway before submitting final shop drawings for approval. Verify elevation data below which was obtained by field measurement or from available project survey data.

Elevation Data for Mast Arm Attachment (H1)

Elevation Differences for:	Arm A	Arm B
Baseline reference point at ℄ Foundation @ ground level	0.0 ft.	0.0 ft.
Elevation difference at High point of roadway surface	-0.40 ft.	0.56 ft.
Elevation difference at Edge of travelway or face of curb	-0.54 ft.	-0.54 ft.

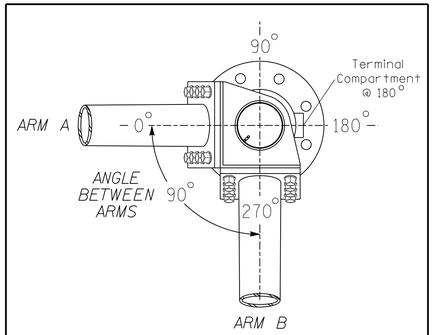

POLE RADIAL ORIENTATION

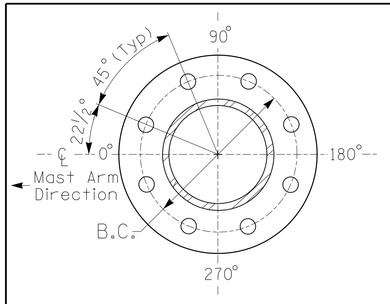

8 BOLT BASE PLATE DETAIL

See Note 6

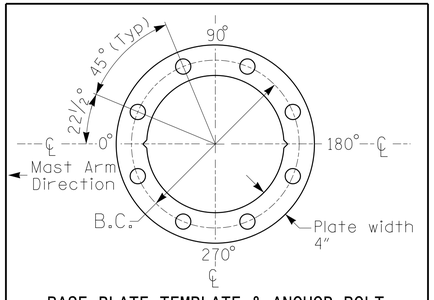

BASE PLATE TEMPLATE & ANCHOR BOLT LOCK PLATE DETAIL

For 8 Bolt Base Plate

MAST ARM LOADING SCHEDULE

LOADING SYMBOL	DESCRIPTION	AREA	SIZE	WEIGHT
	RIGID MOUNTED SIGNAL HEAD 12″-3 SECTION-WITH BACKPLATE	9.3 S.F.	25.5″ W X 52.5″ L	60 LBS
	PEDESTRIAN SIGNAL HEAD WITH MOUNTING HARDWARE	2.2 S.F.	18.5″ W X 17.0″ L	21 LBS
	SIGN RIGID MOUNTED	9.0 S.F.	36.0″ W X 36.0″ L	17 LBS
Street Name	STREET NAME SIGN RIGID MOUNTED	16.0 S.F.	24.0″ W X 96.0″ L	36 LBS

NOTES

DESIGN REFERENCE MATERIAL

1. Design the traffic signal structure and foundation in accordance with:
   - The 6th Edition 2013 AASHTO "Standard Specifications for Structural Supports for Highway Signs, Luminaires, and Traffic Signals, including all of the latest interim revisions.
   - The 2018 NCDOT "Standard Specifications for Roads and Structures." The latest addenda to the specifications can be found in the traffic signal project special provisions.
   - The 2018 NCDOT Roadway Standard Drawings.
   - The traffic signal project plans and special provisions.
   - The NCDOT "Metal Pole Standards" located at the following NCDOT website: https://connect.ncdot.gov/resources/safety/Pages/ITS-Design-Resources.aspx

DESIGN REQUIREMENTS

2. Design the traffic signal structure using the loading conditions shown in the elevation views. These are anticipated worst case "design loads" and may not represent the actual loads that will be applied at the time of the installation. The contractor should refer to the traffic signal plans for the actual loads that will be applied at the time of the installation.
3. Design all signal supports using stress ratios that do not exceed 0.9.
4. The camber design for the mast arm deflection should provide an appearance of a low pitched arch where the tip or the free end of the mast arm does not deflect below horizontal when fully loaded.
5. A clamp-type bolted mast arm-to-pole connection may be used instead of the welded ring stiffened box connection shown as long as the connection meets all of the design requirements. This requires staggering the connections. Use elevation data for each arm to determine appropriate arm connection points.
6. Design base plate with 8 anchor bolt holes. Provide 2 inch x 60 inch anchor bolts.
7. The mast arm attachment height (H1) shown is based on the following design assumptions:
   a. Mast arm slope and deflection are not considered in determining the arm attachment height as they are assumed to offset each other.
   b. Signal heads are rigidly mounted and vertically centered on the mast arm.
   c. The roadway clearance height for design is as shown in the elevation views.
   d. The top of the pole base plate is 0.75 feet above the ground elevation.
   e. Refer to the Elevation Data Chart for the elevation differences between the proposed foundation ground level and the high point of the roadway.
8. The pole manufacturer will determine the total height (H2) of each pole using the greater of the following:
   - Mast arm attachment height (H1) plus 2 feet, or
   - H1 plus 1/2 of the total height of the mast arm attachment assembly plus 1 foot.
9. If pole location adjustments are required, the contractor must gain approval from the Engineer as this may affect the mast arm lengths and arm attachment heights. The contractor may contact the Signal Design Section Senior Structural Engineer for assistance at (919) 814-5000.
10. The contractor is responsible for verifying that the mast arm length shown will allow proper positioning of the signal heads over the roadway.
11. The contractor is responsible for providing soil penetration testing data (SPT) to the pole manufacturer so site specific foundations can be designed.

AECOM
NC Firm License No.: F-0342
5438 Wade Park Boulevard
Suite 200 Raleigh, NC 27607
Phone: 919-461-1100

NCDOT Wind Zone 4 (90 mph)

DOCUMENT NOT CONSIDERED FINAL UNLESS ALL SIGNATURES COMPLETED

Prepared for the Offices of: Transportation Mobility and Safety Division, Signal Design Section, Department of Transportation, State of North Carolina
750 N.Greenfield Pkwy,Garner,NC 27529

US 401 (Louisburg Road)
at
SR 2224 (Mitchell Mill Road)

Division 5 Wake County Raleigh

PLAN DATE:	Jan 2023	REVIEWED BY:	F.A. Campbell
PREPARED BY:	H.M. Surti	REVIEWED BY:	

SCALE 0 N/A N/A

REVISIONS	INIT.	DATE

SEAL: NORTH CAROLINA PROFESSIONAL SEAL 034481 ENGINEER HEMANG M. SURTI

DocuSigned by: Hemang M. Surti AF12BB05ST7A5481 1/24/2023

SIG. INVENTORY NO. 05-1982

1/24/2023
pw:\\aecom-na-pw.bentley.com:AECOM_DS21_NA_2020\Documents\60609754-U-5748 Ligon Mill\900-CAD GIS\910.CAD\70.NCDOT_TIP\Traffic\Signals\Design\Signals\051982_sig_mp2_2022XXXX.dgn
mitchell.cavenaugh

DocuSign Envelope ID: EE0A9FB1-617B-4D0E-A869-87C1A84AA294

PROJECT REFERENCE NO.	SHEET NO.
U-5748	Sig. 13.0

PHASING DIAGRAM

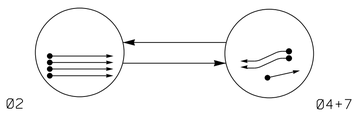

PHASING DIAGRAM DETECTION LEGEND

- DETECTED MOVEMENT
- UNDETECTED MOVEMENT (OVERLAP)
- UNSIGNALIZED MOVEMENT
- PEDESTRIAN MOVEMENT

TABLE OF OPERATION

SIGNAL FACE	PHASE Ø2	PHASE Ø4+7	FLASH
21, 22, 23, 24	↑	R	Y
41, 42	R	↗	R
71, 72	R	↑	R
73	R	↖	R

SIGNAL FACE I.D.

All Heads L.E.D.

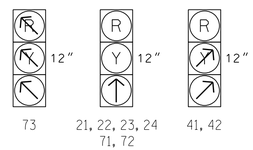

SE-PAC 2070 LOOP & DETECTOR UNIT INSTALLATION CHART

INDUCTIVE LOOPS						DETECTOR PROGRAMMING														
							TIMING		OPERATION MODE									STATUS	
LOOP NO.	SIZE (ft)	TURNS	DIST. FROM STOPBAR (ft)	NEW	EXISTING	ASSIGNED PHASE	DELAY	EXTEND (STRETCH)	0 VEHICLE	1 PEDESTRIAN	2 1 CALL	3 STOP A	4 STOP B	5 PROTFRE LEFT	6 PROTFRE THROUGH	7 AND	SWITCH SYSTEM LOOPS	NEW	EXISTING
2A	6X6	5	280	X	-	2	- SEC.	- SEC.	X	-	-	-	-	-	-	-	-	X	-
2B	6X6	5	280	X	-	2	- SEC.	- SEC.	X	-	-	-	-	-	-	-	-	X	-
2C	6X6	5	280	X	-	2	- SEC.	- SEC.	X	-	-	-	-	-	-	-	-	X	-
2D	6X6	5	280	X	-	2	- SEC.	- SEC.	X	-	-	-	-	-	-	-	-	X	-
4A	6X40	2-4-2	0	X	-	4	- SEC.	15 SEC.	X	-	-	-	-	-	-	-	-	X	-
7A	6X40	2-4-2	0	X	-	7	- SEC.	- SEC.	X	-	-	-	-	-	-	-	-	X	-
7B	6X40	2-4-2	0	X	-	7	- SEC.	- SEC.	X	-	-	-	-	-	-	-	-	X	-

2 Phase
Fully Actuated
(Raleigh Signal System)

NOTES

1. Refer to "Roadway Standard Drawings NCDOT" dated January 2018 and "Standard Specifications for Roads and Structures" dated January 2018.
2. Do not program signal for late night flashing operation unless otherwise directed by the Engineer.
3. Set all detector units to presence mode.
4. Locate new cabinet so as not to obstruct sight distance of vehicles turning right on red.
5. Maximum times shown in timing chart are for free-run operation only. Coordinated signal system timing values supersede these values.

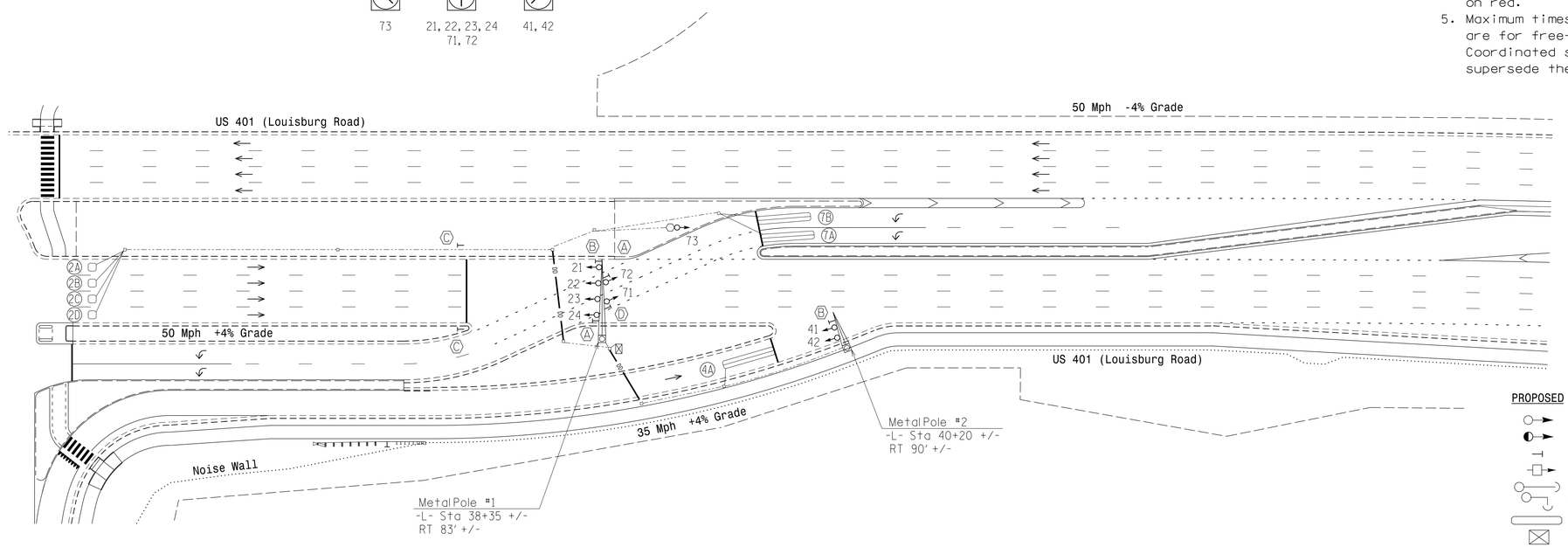

LEGEND

PROPOSED		EXISTING
	Traffic Signal Head	
	Modified Signal Head	N/A
	Sign	
	Pedestrian Signal Head	
	Signal Pole with Guy	
	Signal Pole with Sidewalk Guy	
	Inductive Loop Detector	
	Controller & Cabinet	
	Junction Box	
	2-in Underground Conduit	
N/A	Right of Way	
	Directional Arrow	
N/A	Noise Wall	
N/A	Guardrail	
DD	Directional Drill	N/A
	Metal Pole with Mastarm	
A	No Right Turn Sign (R3-1)	A
B	No Left Turn Sign (R3-2)	B
C	No Turns Sign (R3-3)	C
D	No U-Turn Sign (R3-4)	D

SE-PAC 2070 TIMING CHART

FEATURE	PHASE 2	PHASE 4	PHASE 7
Min Green *	14	7	7
Passage Gap *	6.0	2.0	2.0
Maximum Green *	120	45	45
Yellow Change	4.5	3.6	4.1
Red Clear	3.6	1.9	3.5
Walk *	-	-	-
Pedestrian Clear	-	-	-
Added Initial *	1.5	-	-
Maximum Initial *	32	-	-
Time Before Reduction *	15	-	-
Time To Reduce *	40	-	-
Minimum Gap	3.0	-	-
Recall Mode	MIN RECALL	-	-
Vehicle Call Memory	LOCK	NON-LOCK	NON-LOCK
Dual Entry	-	ON	ON
Simultaneous Gap	ON	ON	ON

* These values may be field adjusted. Do not adjust Min Green and Extension times for phase 2 lower than what is shown. Min Green for all other phases should not be lower than 4 seconds.

New Installation

DOCUMENT NOT CONSIDERED FINAL UNLESS ALL SIGNATURES COMPLETED

AECOM
NC Firm License No.: F-0342
5438 Wade Park Boulevard
Suite 200 Raleigh, NC 27607
Phone: 919-461-1100

Prepared for the Offices of:
Transportation Mobility and Safety Division
Signal Design Section
750 N.Greenfield Pkwy,Garner,NC 27529

US 401 NB (Louisburg Road) at CFI Cross-over North of SR 2224 (Mitchell Mill Road)

Division 5 Wake County Raleigh

PLAN DATE: Jan 2023 REVIEWED BY: F.A. Campbell
PREPARED BY: H.M. Surti REVIEWED BY:

SCALE 0 50 1"=50'

REVISIONS	INIT.	DATE

SEAL
NORTH CAROLINA PROFESSIONAL SEAL 034481 ENGINEER HEMANG M. SURTI

DocuSigned by: Hemang M. Surti 1/24/2023
SIGNATURE/DATE

SIG. INVENTORY NO. 05-1251

1/24/2023
mitchell.coverdugh
DocuSign Envelope ID: EE0A9FB1-617B-4D0E-A869-87C1A84AA294
U:\aecom-mc-pw.bentley.com:AECOM_DS21_NA_2020\Documents\60609754-U-5748 Ligon Mill\900-CAD GIS\910_CAD\70_NCDOT_TIP\Traffic\Signals\Design\Signals\051251_sig_dsn_2022XXXX.dgn

DocuSign Envelope ID: EE0A9FB1-617B-4D0E-A869-87C1A84AA294

PROJECT REFERENCE NO.	SHEET NO.
U-5748	Sig. 13.1

18 CHANNEL CONFLICT MONITOR PROGRAMMING DETAIL

(remove jumpers and set switches as shown)

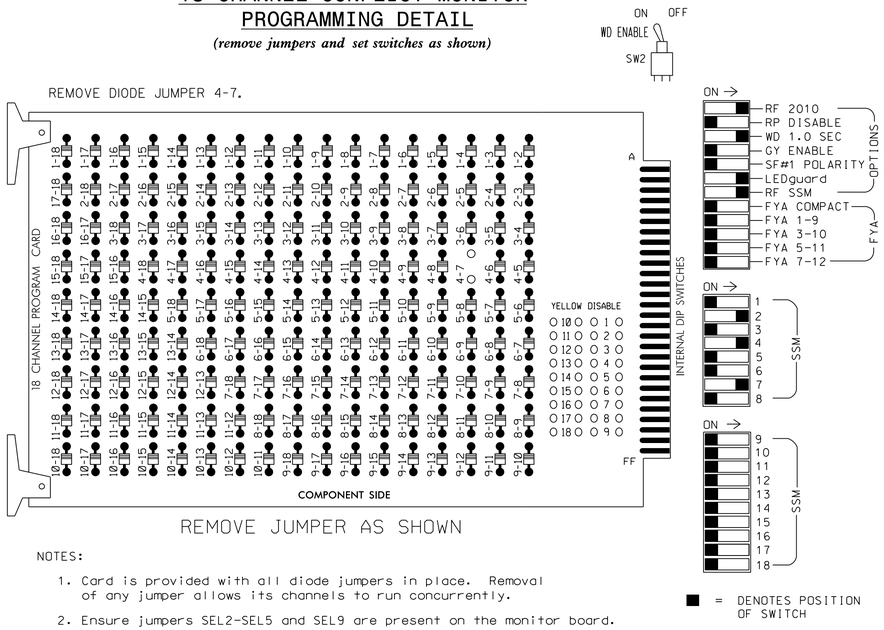

■ = DENOTES POSITION OF SWITCH

NOTES:

1. Card is provided with all diode jumpers in place. Removal of any jumper allows its channels to run concurrently.
2. Ensure jumpers SEL2-SEL5 and SEL9 are present on the monitor board.
3. Ensure that Red Enable is active at all times during normal operation.
4. Connect serial cable from conflict monitor to comm. port 1 of 2070 controller. Ensure conflict monitor communicates with 2070.

NOTES

1. To prevent "flash-conflict" problems, insert red flash program blocks for all unused vehicle load switches in the output file. The installer shall verify that signal heads flash in accordance with the Signal Plans.
2. Program controller to start up in phase 2 green.
3. Enable simultaneous gap-out feature, on controller unit, for all phases.
4. Program phases 4 and 7, on controller unit, for dual entry.
5. Program phase 2, on controller unit, for volume density operation.
6. The cabinet and controller are part of the Raleigh Signal System.

EQUIPMENT INFORMATION

CONTROLLER.....2070LX
CABINET.....332 W/ AUX
SOFTWARE.....SE-PAC2070
CABINET MOUNT.....BASE
OUTPUT FILE POSITIONS...18 WITH AUX. OUTPUT FILE
LOAD SWITCHES USED.....S2,S5,S10
PHASES USED.....2,4,7
OVERLAP "A".....NOT USED
OVERLAP "B".....NOT USED
OVERLAP "C".....NOT USED
OVERLAP "D".....NOT USED

SIGNAL HEAD HOOK-UP CHART

LOAD SWITCH NO.	S1	S2	S3	S4	S5	S6	S7	S8	S9	S10		S11	S12	AUX S1	AUX S2	AUX S3	AUX S4	AUX S5	AUX S6
CMU CHANNEL NO.	1	2	13	3	4	14	5	6	15	7		8	16	9	10	17	11	12	18
PHASE	1	2	2 PED	3	4	4 PED	5	6	6 PED	7		8	8 PED	OLA	OLB	SPARE	OLC	OLD	SPARE
SIGNAL HEAD NO.	NU	21,22, 23,24	NU	NU	41,42	NU	NU	NU	NU	71,72	73	NU	NU	NU	NU	NU	NU	NU	NU
RED		128			101					122									
YELLOW		129								123									
GREEN																			
RED ARROW											122								
YELLOW ARROW					102						123								
GREEN ARROW		130			103					124	124								

NU = Not Used

INPUT FILE POSITION LAYOUT

(front view)

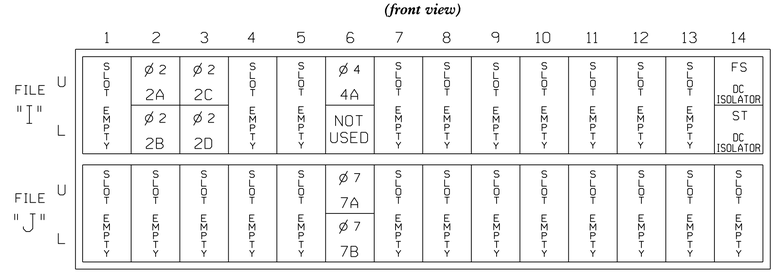

EX.: 1A, 2A, ETC. = LOOP NO.'S

FS = FLASH SENSE
ST = STOP TIME

INPUT FILE CONNECTION & PROGRAMMING CHART

LOOP NO.	LOOP TERMINAL	INPUT FILE POS.	PIN NO.	DETECTOR NO.	NEMA PHASE	DELAY TIME	EXTEND (STRETCH) TIME
2A	TB2-5,6	I2U	39	3	2		
2B	TB2-7,8	I2L	43	4	2		
2C	TB2-9,10	I3U	63	5	2		
2D	TB2-11,12	I3L	76	6	2		
4A	TB4-9,10	I6U	41	11	4		15
7A	TB5-9,10	J6U	42	31	7		
7B	TB5-11,12	J6L	46	32	7		

INPUT FILE POSITION LEGEND: J2L
FILE J
SLOT 2
LOWER

THIS ELECTRICAL DETAIL IS FOR
THE SIGNAL DESIGN: 05-1251
DESIGNED: Jan 2023
SEALED: 1/24/2023
REVISED:

Electrical Detail

DOCUMENT NOT CONSIDERED FINAL UNLESS ALL SIGNATURES COMPLETED

ELECTRICAL AND PROGRAMMING DETAILS FOR:

Prepared for the Offices of:

CFI Transportation Mobility and Safety Division
STATE OF NORTH CAROLINA DEPARTMENT OF TRANSPORTATION
Signals Management Section

750 N.Greenfield Pkwy,Garner,NC 27529

US 401 NB (Louisburg Road) at CFI Cross-over North of SR 2224 (Mitchell Mill Road)

Division 5 Wake County Raleigh

PLAN DATE:	Jan 2023	REVIEWED BY:	H.M. Surti
PREPARED BY:	A. Ravipati	REVIEWED BY:	

REVISIONS	INIT.	DATE

SEAL

NORTH CAROLINA PROFESSIONAL SEAL 034481 ENGINEER HEMANG M. SURTI

DocuSigned by: Hemang M. Surti AF12B8DC7A5A41... 1/24/2023

SIG. INVENTORY NO. 05-1251

AECOM
NC Firm License No.: F-0342
5438 Wade Park Boulevard
Suite 200 Raleigh, NC 27607
Phone: 919-461-1100

1/24/2023
pw:\\aecom-na-pw.bentley.com:AECOM_DS21_NA_2020\Documents\60609754-U-5748 Ligon Mill\900-CAD GIS\910_CAD\70_NCDOT_TIP\Traffic\Signals\Design\Signals\Electrical Details_2022\051251_sm_ele_2022XXXX.dgn
michael.cavenaugh

DocuSign Envelope ID: EE0A9FB1-617B-4D0E-A869-87C1A84AA294

PROJECT REFERENCE NO.	SHEET NO.
U-5748	Sig. 13.2

METAL POLE Nos. 1 and 2

Design Loading for METAL POLE NO. 1

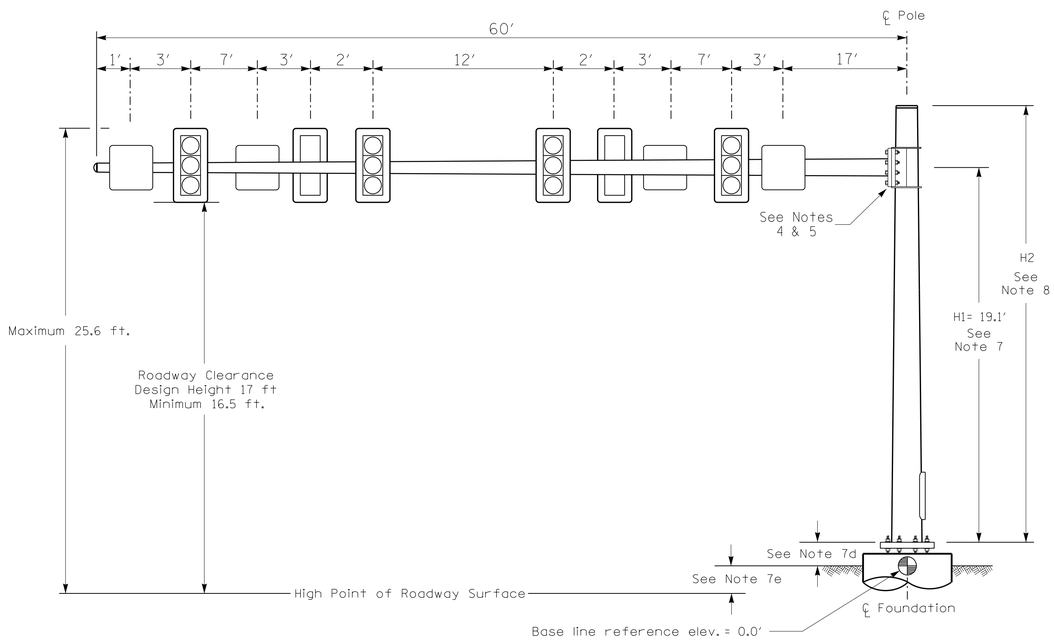

Elevation View

Design Loading for METAL POLE NO. 2

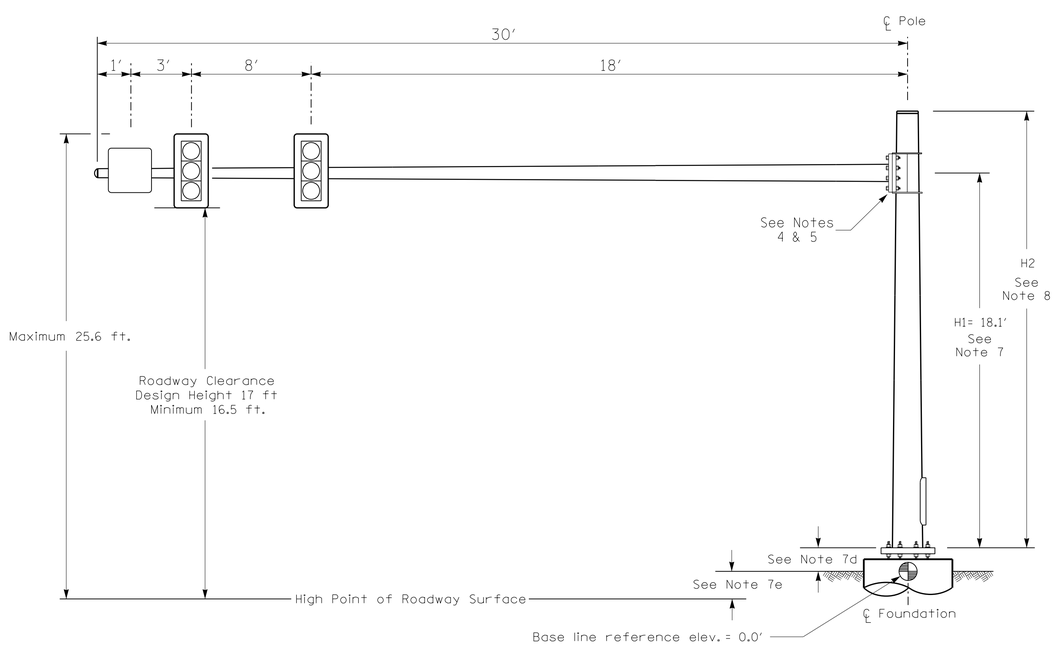

Elevation View

SPECIAL NOTE

The contractor is responsible for verifying that the mast arm attachment height (H1) will provide the "Design Height" clearance from the roadway before submitting final shop drawings for approval. Verify elevation data below which was obtained by field measurement or from available project survey data.

Elevation Data for Mast Arm Attachment (H1)

Elevation Differences for:	Pole 1	Pole 2
Baseline reference point at ℄ Foundation @ ground level	0.0 ft.	0.0 ft.
Elevation difference at High point of roadway surface	0.08 ft.	-0.98 ft.
Elevation difference at Edge of travelway or face of curb	-0.39 ft.	0.32 ft.

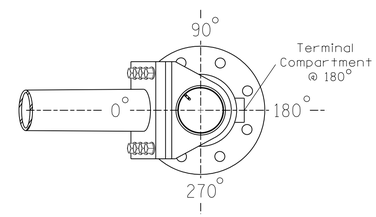

POLE RADIAL ORIENTATION

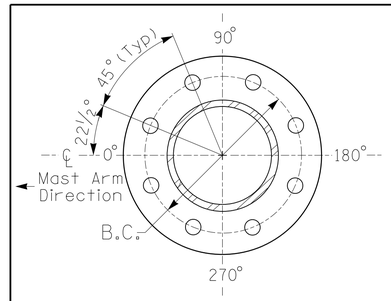

8 BOLT BASE PLATE DETAIL

See Note 6

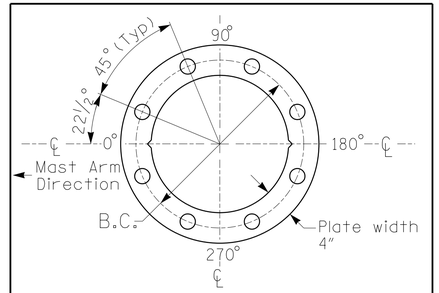

BASE PLATE TEMPLATE & ANCHOR BOLT LOCK PLATE DETAIL

For 8 Bolt Base Plate

MAST ARM LOADING SCHEDULE

LOADING SYMBOL	DESCRIPTION	AREA	SIZE	WEIGHT
	RIGID MOUNTED SIGNAL HEAD 12″-3 SECTION-WITH BACKPLATE	9.3 S.F.	25.5″ W X 52.5″ L	60 LBS
	SIGN RIGID MOUNTED	9.0 S.F.	36.0″ W X 36.0″ L	17 LBS

NOTES

DESIGN REFERENCE MATERIAL

1. Design the traffic signal structure and foundation in accordance with:
   - The 6th Edition 2013 AASHTO "Standard Specifications for Structural Supports for Highway Signs, Luminaires, and Traffic Signals, including all of the latest interim revisions.
   - The 2018 NCDOT "Standard Specifications for Roads and Structures." The latest addenda to the specifications can be found in the traffic signal project special provisions.
   - The 2018 NCDOT Roadway Standard Drawings.
   - The traffic signal project plans and special provisions.
   - The NCDOT "Metal Pole Standards" located at the following NCDOT website: https://connect.ncdot.gov/resources/safety/Pages/ITS-Design-Resources.aspx

DESIGN REQUIREMENTS

2. Design the traffic signal structure using the loading conditions shown in the elevation views. These are anticipated worst case "design loads" and may not represent the actual loads that will be applied at the time of the installation. The contractor should refer to the traffic signal plans for the actual loads that will be applied at the time of the installation.
3. Design all signal supports using stress ratios that do not exceed 0.9.
4. The camber design for the mast arm deflection should provide an appearance of a low pitched arch where the tip or the free end of the mast arm does not deflect below horizontal when fully loaded.
5. A clamp-type bolted mast arm-to-pole connection may be used instead of the welded ring stiffened box connection shown as long as the connection meets all of the design requirements.
6. Design base plate with 8 anchor bolt holes. Provide 2 inch x 60 inch anchor bolts.
7. The mast arm attachment height (H1) shown is based on the following design assumptions:
   a. Mast arm slope and deflection are not considered in determining the arm attachment height as they are assumed to offset each other.
   b. Signal heads are rigidly mounted and vertically centered on the mast arm.
   c. The roadway clearance height for design is as shown in the elevation views.
   d. The top of the pole base plate is 0.75 feet above the ground elevation.
   e. Refer to the Elevation Data Chart for the elevation differences between the proposed foundation ground level and the high point of the roadway.
8. The pole manufacturer will determine the total height (H2) of each pole using the greater of the following:
   - Mast arm attachment height (H1) plus 2 feet, or
   - H1 plus 1/2 of the total height of the mast arm attachment assembly plus 1 foot.
9. If pole location adjustments are required, the contractor must gain approval from the Engineer as this may affect the mast arm lengths and arm attachment heights. The contractor may contact the Signal Design Section Senior Structural Engineer for assistance at (919) 814-5000.
10. The contractor is responsible for verifying that the mast arm length shown will allow proper positioning of the signal heads over the roadway.
11. The contractor is responsible for providing soil penetration testing data (SPT) to the pole manufacturer so site specific foundations can be designed.

AECOM
NC Firm License No.: F-0342
5438 Wade Park Boulevard
Suite 200 Raleigh, NC 27607
Phone: 919-461-1100

NCDOT Wind Zone 4 (90 mph)

DOCUMENT NOT CONSIDERED FINAL UNLESS ALL SIGNATURES COMPLETED

Prepared for the Offices of:
Transportation Mobility and Safety Division
Signal Design Section
750 N.Greenfield Pkwy,Garner,NC 27529

US 401 NB (Louisburg Road)
at
CFI Crossover North of
SR 2224 (Mitchell Mill Road)

Division 5 Wake County Raleigh

PLAN DATE:	Jan 2023	REVIEWED BY:	F.A. Campbell
PREPARED BY:	H.M. Surti	REVIEWED BY:	

SCALE 0 N/A N/A

REVISIONS	INIT.	DATE

SEAL
NORTH CAROLINA PROFESSIONAL SEAL 034481 ENGINEER HEMANG M. SURTI

DocuSigned by:
Hemang M. Surti 1/24/2023
AF12BB0557A5481...

SIG. INVENTORY NO. 05-1251

1/24/2023
bentleyuser@cpc.bentley.com AECOM.DS21_NA.2020 Documents 60609754-U-5748 Ligon Mill #900-CAD GIS #910_CAD #70_NCDOT_TIP #Traffic #Signals #Design #Signals #051251_sig_mp_2022XXXX.dgn
mitchell.cavenaugh

DocuSign Envelope ID: EE0A9FB1-617B-4D0E-A869-87C1A84AA294

PROJECT REFERENCE NO.	SHEET NO.
U-5748	Sig. 14.0

PHASING DIAGRAM

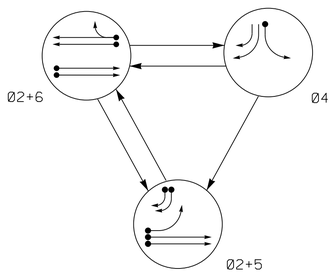

TABLE OF OPERATION

SIGNAL FACE	PHASE Ø2+5	PHASE Ø2+6	PHASE Ø4	PHASE FLASH
21, 22	G	G	R	Y
41	~~R~~	~~R~~	←	~~R~~
42, 43	→	R	→	R
51	←	~~R~~	~~R~~	~~R~~
61	R	↑	R	Y
62	R	G	R	Y

SE-PAC 2070 LOOP & DETECTOR UNIT INSTALLATION CHART

INDUCTIVE LOOPS						DETECTOR PROGRAMMING															
							TIMING		OPERATION MODE										STATUS	
									0	1	2	3	4	5	6	7				
ZONE NO.	SIZE (ft)	TURNS	DIST. FROM STOPBAR (ft)	NEW	EXISTING	ASSIGNED PHASE	DELAY	EXTEND (STRETCH)	VEHICLE	PEDESTRIAN	1 CALL	STOP A	STOP B	PROTPER LEFT	PROTPER THROUGH	AND	SWITCH	SYSTEM LOOPS	NEW	EXISTING
2A ✳	6X6	✳	355	✳	-	2	- SEC.	- SEC.	X	-	-	-	-	-	-	-	-	-	✳	-
2B ✳	6X6	✳	355	✳	-	2	- SEC.	- SEC.	X	-	-	-	-	-	-	-	-	-	✳	-
4A ✳	6X40	✳	0	✳	-	4	- SEC.	- SEC.	X	-	-	-	-	-	-	-	-	-	✳	-
5A ✳	6X40	✳	0	✳	-	5	- SEC.	- SEC.	X	-	-	-	-	-	-	-	-	-	✳	-
5B ✳	6X40	✳	0	✳	-	5	15 SEC.	- SEC.	X	-	-	-	-	-	-	-	-	-	✳	-
5C ✳	6X40	✳	0	✳	-	5	15 SEC.	- SEC.	X	-	-	-	-	-	-	-	-	-	✳	-
6A ✳	6X6	✳	355	✳	-	6	- SEC.	- SEC.	X	-	-	-	-	-	-	-	-	-	✳	-
6B ✳	6X6	✳	355	✳	-	6	- SEC.	- SEC.	X	-	-	-	-	-	-	-	-	-	✳	-

✳ Video Detection Zone

3 Phase
Fully Actuated
(Raleigh Signal System)

NOTES

1. Refer to "Roadway Standard Drawings NCDOT" dated January 2018 and "Standard Specifications for Roads and Structures" dated January 2018.
2. Do not program signal for late night flashing operation unless otherwise directed by the Engineer.
3. Phase 5 may be lagged.
4. Set all detector units to presence mode.
5. Locate new cabinet so as not to obstruct sight distance of vehicles turning right on red.
6. This intersection uses video detection. Install detectors according to the manufacturer's instructions to achieve the desired detection.
7. Maximum times shown in timing chart are for free-run operation only. Coordinated signal system timing values supersede these values.

SIGNAL FACE I.D.

All Heads L.E.D.

PHASING DIAGRAM DETECTION LEGEND

- DETECTED MOVEMENT
- UNDETECTED MOVEMENT (OVERLAP)
- UNSIGNALIZED MOVEMENT
- PEDESTRIAN MOVEMENT

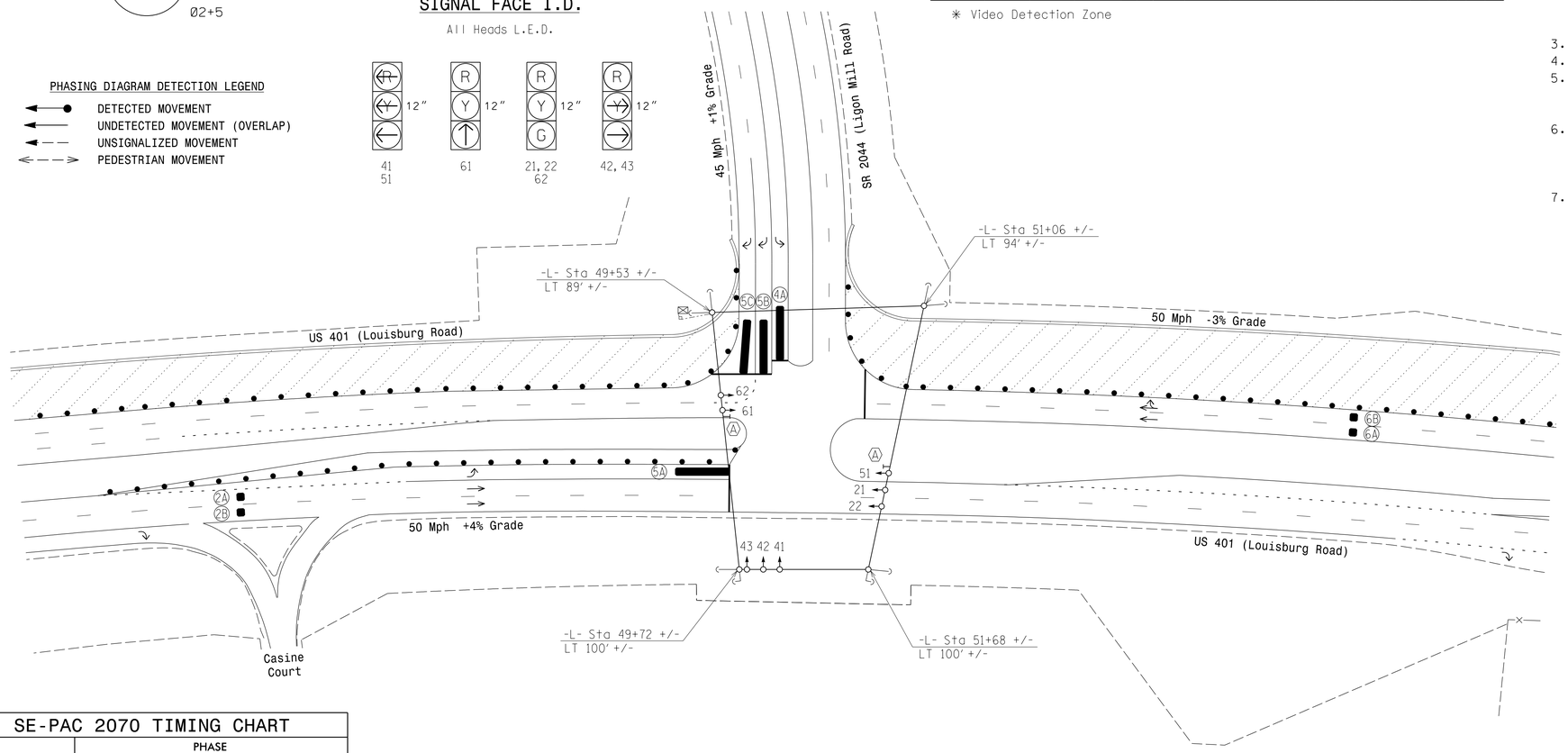

LEGEND

PROPOSED		EXISTING
	Traffic Signal Head	
	Modified Signal Head	N/A
	Sign	
	Pedestrian Signal Head	
	Signal Pole with Guy	
	Signal Pole with Sidewalk Guy	
	Inductive Loop Detector	
	Controller & Cabinet	
	Junction Box	
	2-in Underground Conduit	
N/A	Right of Way	
	Directional Arrow	
	Video Detection Zone	
	Construction Zone	
	Construction Zone Drums	
Ⓐ	No U-Turn Sign (R3-4)	Ⓐ

SE-PAC 2070 TIMING CHART

FEATURE	PHASE 2	PHASE 4	PHASE 5	PHASE 6
Min Green *	14	7	7	14
Passage Gap *	6.0	2.0	2.0	6.0
Maximum Green *	120	30	35	120
Yellow Change	4.5	3.0	3.0	5.1
Red Clear	1.2	3.3	3.2	1.5
Walk *	-	-	-	-
Pedestrian Clear	-	-	-	-
Added Initial *	1.5	-	-	1.5
Maximum Initial *	40	-	-	40
Time Before Reduction *	20	-	-	20
Time To Reduce *	40	-	-	40
Minimum Gap	3.0	-	-	3.0
Recall Mode	MIN RECALL	-	-	MIN RECALL
Vehicle Call Memory	LOCK	NON-LOCK	NON-LOCK	LOCK
Dual Entry	-	-	-	-
Simultaneous Gap	ON	ON	ON	ON

* These values may be field adjusted. Do not adjust Min Green and Extension times for phases 2 and 6 lower than what is shown. Min Green for all other phases should not be lower than 4 seconds.

New Installation - Temp Design 1(TMP Phase II)

DOCUMENT NOT CONSIDERED FINAL UNLESS ALL SIGNATURES COMPLETED

AECOM
NC Firm License No.: F-0342
5438 Wade Park Boulevard
Suite 200 Raleigh, NC 27607
Phone: 919-461-1100

Prepared for the Offices of:
Transportation Mobility and Safety Division
STATE OF NORTH CAROLINA DEPARTMENT OF TRANSPORTATION
Signal Design Section
750 N.Greenfield Pkwy,Garner,NC 27529

US 401 (Louisburg Road)
at
SR 2044 (Ligon Mill Road)

Division 5 | Wake County | Raleigh

PLAN DATE: Jan 2023 | REVIEWED BY: F.A. Campbell
PREPARED BY: H.M. Surti | REVIEWED BY:

SCALE 0 50 1"=50'

REVISIONS | INIT. | DATE

SEAL
NORTH CAROLINA PROFESSIONAL SEAL 034481 ENGINEER HEMANG M. SURTI

DocuSigned by: Hemang M. Surti 1/24/2023
SIG. INVENTORY NO. 05-1252TI

1/24/2023
bentleyuser@ncdot-pw.bentley.com:AECOM.DS21_NA.2020#Documents#60609754-U-5748 Ligon Mill#900-CAD GIS#910_CAD#70_NCDOT_TIP#Traffic#Signals#Design#Signals#05125271_sig_dgn_2022XXXX.dgn
michael.coverdugh

DocuSign Envelope ID: EE0A9FB1-617B-4D0E-A869-87C1A84AA294

18 CHANNEL CONFLICT MONITOR PROGRAMMING DETAIL

(remove jumpers and set switches as shown)

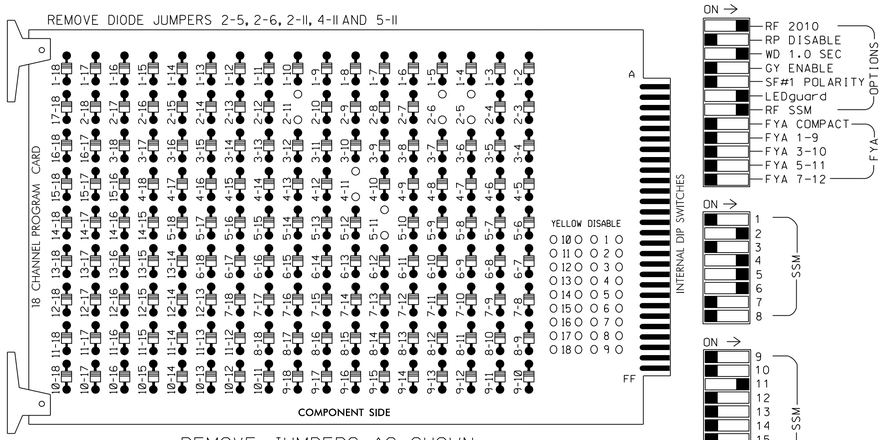

REMOVE JUMPERS AS SHOWN

NOTES:

1. Card is provided with all diode jumpers in place. Removal of any jumper allows its channels to run concurrently.
2. Ensure jumpers SEL2-SEL5 and SEL9 are present on the monitor board.
3. Ensure that Red Enable is active at all times during normal operation.
4. Connect serial cable from conflict monitor to comm. port 1 of 2070 controller. Ensure conflict monitor communicates with 2070.

NOTES

1. To prevent "flash-conflict" problems, insert red flash program blocks for all unused vehicle load switches in the output file. The installer shall verify that signal heads flash in accordance with the Signal Plans.
2. Program controller to start up in phases 2 and 6 green.
3. Enable simultaneous gap-out feature, on controller unit, for all phases.
4. Program phases 2 and 6, on controller unit, for volume density operation.
5. The cabinet and controller are part of the Raleigh Signal System.

EQUIPMENT INFORMATION

CONTROLLER.....2070LX
CABINET.....332 W/ AUX
SOFTWARE.....SE-PAC2070
CABINET MOUNT.....BASE
OUTPUT FILE POSITIONS...18 WITH AUX. OUTPUT FILE
LOAD SWITCHES USED.....S2,S5,S7,S8,AUX S4
PHASES USED.....2,4,5,6
OVERLAP "A".....NOT USED
OVERLAP "B".....NOT USED
OVERLAP "C".....*
OVERLAP "D".....NOT USED

* See This Sheet for Overlap programming.

SIGNAL HEAD HOOK-UP CHART

LOAD SWITCH NO.	S1	S2	S3	S4	S5	S6	S7	S8		S9	S10	S11	S12	AUX S1	AUX S2	AUX S3	AUX S4	AUX S5	AUX S6
CMU CHANNEL NO.	1	2	13	3	4	14	5	6		15	7	8	16	9	10	17	11	12	18
PHASE	1	2	2 PED	3	4	4 PED	5	6		6 PED	7	8	8 PED	OLA	OLB	SPARE	OLC	OLD	SPARE
SIGNAL HEAD NO.	NU	21,22	NU	NU	41	NU	51	61	62	NU	NU	NU	NU	NU	NU	NU	42,43	NU	NU
RED		128						134	134								A114		
YELLOW		129						135	135										
GREEN		130							136										
RED ARROW					101		131												
YELLOW ARROW					102		132										A115		
GREEN ARROW					103		133	136									A116		

NU = Not Used

OVERLAP PROGRAMMING FOR OVERLAP C

1. From Main Menu select 4 - UNIT DATA
2. From UNIT DATA Submenu select 3 - OVERLAP DATA

Use Up/Dn/Left/Right keys to position cursor on the desired Overlap. Use the NEXT key to select the overlap type. Press the ENT key and then program as per the Overlap screen(s) shown.

```
OVERLAP DATA

  A: ---   E: ---   I: ---   M: ---
  B: ---   F: ---   J: ---   N: ---
  C: STD   G: ---   K: ---   O: ---
  D: ---   H: ---   L: ---   P: ---

 PREV/NEXT TO CYCLE
```

OVERLAP C

Use Up/Dn/Left/Right keys to position cursor on Overlap 'C', use the NEXT key to select 'STD', then press ENT

```
OVERLAP - C        12345678 90123456
          PARENTS: 00011000 00000000
      +GRN PHASES: 00000000 00000000
      -G/Y PHASES: 00000000 00000000
      -PED PHASES: 00000000 00000000
 TRAIL GREEN STANDARD:   0  YEL/10:  40
 TRAIL GREEN  PREEMPT:   0  YEL/10:  20
```

END OVERLAP PROGRAMMING

INPUT FILE POSITION LAYOUT

(front view)

		1	2	3	4	5	6	7	8	9	10	11	12	13	14
FILE "I"	U	SLOT EMPTY	SLOT EMPTY	SLOT EMPTY	SLOT EMPTY	SLOT EMPTY	SLOT EMPTY	SLOT EMPTY	SLOT EMPTY	SLOT EMPTY	SLOT EMPTY	SLOT EMPTY	SLOT EMPTY	SLOT EMPTY	FS DC ISOLATOR
	L														ST DC ISOLATOR
FILE "J"	U	SLOT EMPTY	SLOT EMPTY	SLOT EMPTY	SLOT EMPTY	SLOT EMPTY	SLOT EMPTY	SLOT EMPTY	SLOT EMPTY	SLOT EMPTY	SLOT EMPTY	SLOT EMPTY	SLOT EMPTY	SLOT EMPTY	SLOT EMPTY
	L														

EX.: 1A, 2A, ETC. = LOOP NO.'S

FS = FLASH SENSE
ST = STOP TIME

INPUT FILE POSITION LEGEND: J2L
FILE J
SLOT 2
LOWER

SPECIAL DETECTOR NOTE

Install a video detection system for vehicle detection. Perform installation according to manufacturer's directions and NCDOT engineer-approved mounting locations to accomplish the detection schemes shown on the Signal Design Plans.

FLASHER CIRCUIT MODIFICATION DETAIL

IN ORDER TO INSURE THAT SIGNALS FLASH CONCURRENTLY ON THE SAME APPROACH, MAKE THE FOLLOWING FLASHER CIRCUIT CHANGES:

1. ON REAR OF PDA - REMOVE WIRE FROM TERM. T2-4 AND TERMINATE ON T2-2.
2. ON REAR OF PDA - REMOVE WIRE FROM TERM. T2-5 AND TERMINATE ON T2-3.
3. REMOVE FLASHER UNIT 2.

THE CHANGES LISTED ABOVE TIES ALL PHASES AND OVERLAPS TO FLASHER UNIT 1.

THIS ELECTRICAL DETAIL IS FOR
THE SIGNAL DESIGN: 05-1252T1
DESIGNED: Jan 2023
SEALED: 1/24/2023
REVISED:

AECOM
NC Firm License No.: F-0342
5438 Wade Park Boulevard
Suite 200 Raleigh, NC 27607
Phone: 919-461-1100

Temporary Design 1 (TMP Phase II)
Electrical Detail

DOCUMENT NOT CONSIDERED FINAL UNLESS ALL SIGNATURES COMPLETED

ELECTRICAL AND PROGRAMMING DETAILS FOR:

Prepared for the Offices of:
Traffic Engineering Branch, Mobility and Safety Division, Signal Management Section, NC Department of Transportation
750 N.Greenfield Pkwy,Garner,NC 27529

US 401 (Louisburg Road)
at
SR 2044 (Ligon Mill Road)

Division 5 | Wake County | Raleigh

PLAN DATE:	Jan 2023	REVIEWED BY:	H.M. Surti
PREPARED BY:	A. Ravipati	REVIEWED BY:	

REVISIONS	INIT.	DATE

SEAL
NORTH CAROLINA PROFESSIONAL SEAL 034481 ENGINEER HEMANG M. SURTI

DocuSigned by: Hemang M. Surti AE1D8DDC7A5A41... 1/24/2023

SIG. INVENTORY NO. 05-1252T1

1/24/2023
pw:\\aecom-na-pw.bentley.com:AECOM_DS21_NA_2020\Documents\60609754-U-5748 Ligon Mill\900-CAD GIS\910_CAD\70_NCDOT_TIP\Traffic\Signals\Design\Signals\Electrical Details_2022\05125ZT1_sm_ele_2022XXXX.dgn
michael.cavenaugh

DocuSign Envelope ID: EE0A9FB1-617B-4D0E-A869-87C1A84AA294

PROJECT REFERENCE NO.	SHEET NO.
U-5748	Sig. 15.0

PHASING DIAGRAM

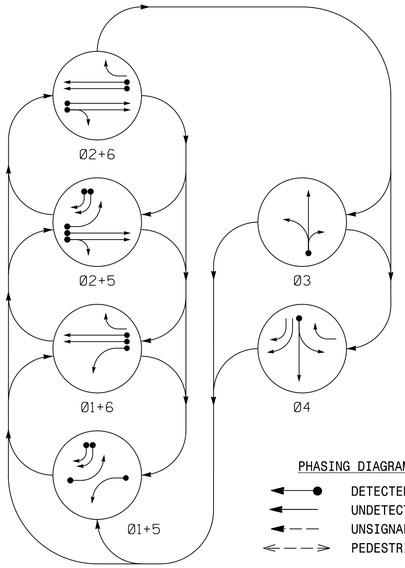

PHASING DIAGRAM DETECTION LEGEND

- DETECTED MOVEMENT
- UNDETECTED MOVEMENT (OVERLAP)
- UNSIGNALIZED MOVEMENT
- PEDESTRIAN MOVEMENT

TABLE OF OPERATION

SIGNAL FACE	PHASE 01+5	01+6	02+5	02+6	03	04	FLASH
11	←	←	~~R~~	~~R~~	~~R~~	~~R~~	~~R~~
21, 22	R	R	G	G	R	R	Y
31	R	R	R	R	G	R	R
32	R	R	R	G	R	R	R
41	R	R	R	R	G	R	R
42, 43, 46	→	R	→	R	R	→	R
44, 45	R	R	R	R	R	G	R
51	←	~~R~~	←	~~R~~	~~R~~	~~R~~	~~R~~
61, 62	R	G	R	G	R	R	Y
63	R	→	R	→	R	→	~~Y~~

SE-PAC 2070 LOOP & DETECTOR UNIT INSTALLATION CHART

INDUCTIVE LOOPS						DETECTOR PROGRAMMING													
							TIMING		OPERATION MODE									STATUS	
ZONE NO.	SIZE (ft)	TURNS	DIST. FROM STOPBAR (ft)	NEW	EXISTING	ASSIGNED PHASE	DELAY	EXTEND (STRETCH)	0 VEHICLE	1 PEDESTRIAN	2 1 CALL	3 STOP A	4 STOP B	5 PROTPER LEFT	6 PROTPER THROUGH	7 AND	SWITCH	NEW	EXISTING
1A ✳	6X40	✳	0	✳	-	1	3 SEC.	- SEC.	X	-	-	-	-	-	-	-	-	✳	-
2A ✳	6X6	✳	355	✳	-	2	- SEC.	- SEC.	X	-	-	-	-	-	-	-	-	✳	-
2B ✳	6X6	✳	355	✳	-	2	- SEC.	- SEC.	X	-	-	-	-	-	-	-	-	✳	-
3A ✳	6X40	✳	0	✳	-	3	10 SEC.	- SEC.	X	-	-	-	-	-	-	-	-	✳	-
4A ✳	6X40	✳	0	✳	-	4	- SEC.	- SEC.	X	-	-	-	-	-	-	-	-	✳	-
5A ✳	6X40	✳	0	✳	-	5	3 SEC.	- SEC.	X	-	-	-	-	-	-	-	-	✳	-
5B ✳	6X40	✳	0	✳	-	5	15 SEC.	- SEC.	X	-	-	-	-	-	-	-	-	✳	-
5C ✳	6X40	✳	0	✳	-	5	15 SEC.	- SEC.	X	-	-	-	-	-	-	-	-	✳	-
6A ✳	6X6	✳	355	✳	-	6	- SEC.	- SEC.	X	-	-	-	-	-	-	-	-	✳	-
6B ✳	6X6	✳	355	✳	-	6	- SEC.	- SEC.	X	-	-	-	-	-	-	-	-	✳	-

✳ Video Detection Zone

SIGNAL FACE I.D.

All Heads L.E.D.

6 Phase
Fully Actuated
(Raleigh Signal System)

NOTES

1. Refer to "Roadway Standard Drawings NCDOT" dated January 2018 and "Standard Specifications for Roads and Structures" dated January 2018.
2. Do not program signal for late night flashing operation unless otherwise directed by the Engineer.
3. Phase 1 and/or phase 5 may be lagged.
4. The order of phase 3 and phase 4 may be reversed.
5. Reposition existing signal heads numbered 21, 22, 42, 43, 51, and 62.
6. Set all detector units to presence mode.
7. This intersection uses video detection. Install detectors according to the manufacturer's instructions to achieve the desired detection.
8. Maximum times shown in timing chart are for free-run operation only. Coordinated signal system timing values supersede these values.

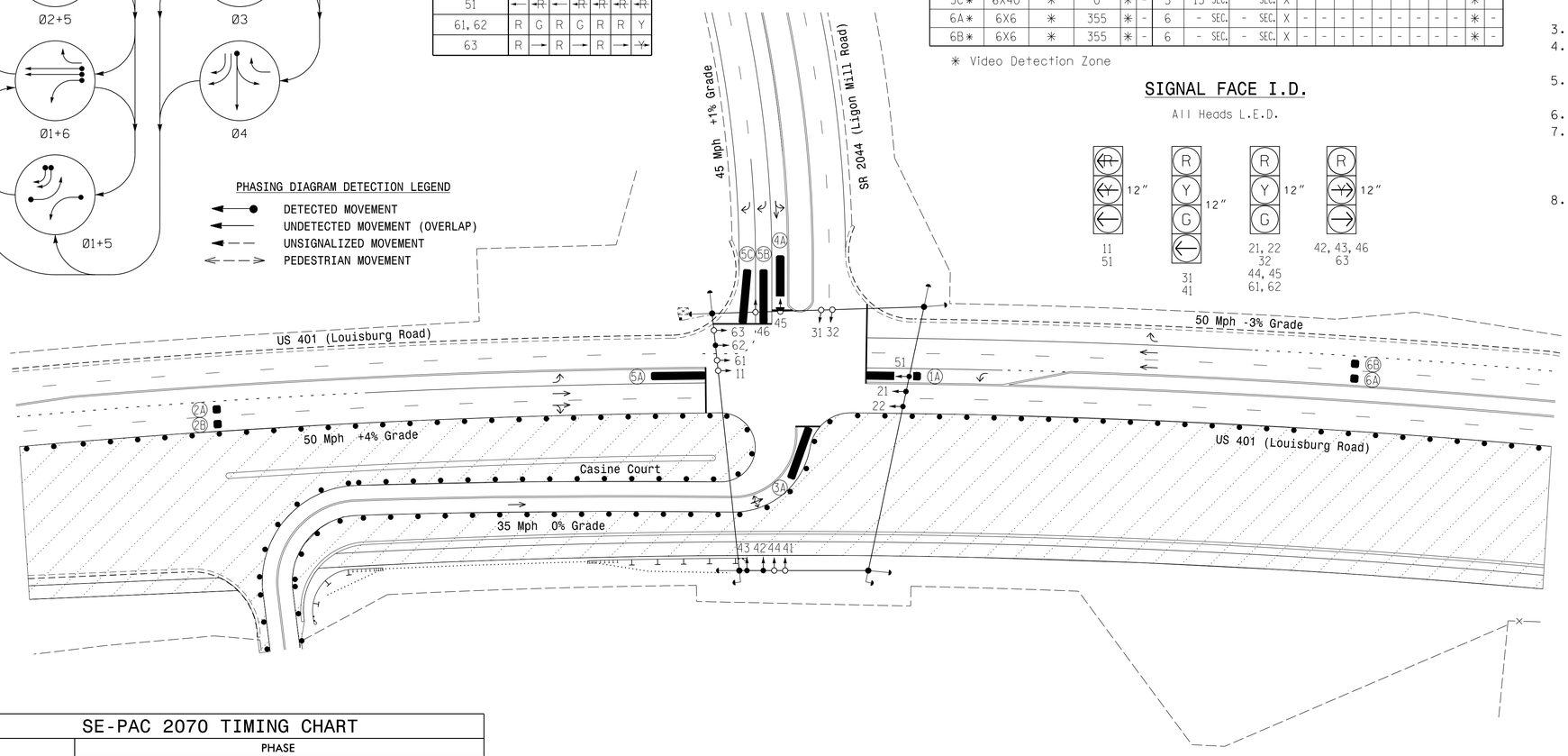

LEGEND

PROPOSED		EXISTING
	Traffic Signal Head	
	Modified Signal Head	N/A
	Sign	
	Pedestrian Signal Head	
	Signal Pole with Guy	
	Signal Pole with Sidewalk Guy	
	Inductive Loop Detector	
	Controller & Cabinet	
	Junction Box	
	2-in Underground Conduit	
N/A	Right of Way	
	Directional Arrow	
	Video Detection Zone	
	Construction Zone	
	Construction Zone Drums	
N/A	Noise Wall	
N/A	Guardrail	

SE-PAC 2070 TIMING CHART

FEATURE	PHASE 1	2	3	4	5	6
Min Green *	7	14	7	7	7	14
Passage Gap *	2.0	6.0	2.0	2.0	2.0	6.0
Maximum Green *	20	120	30	30	35	120
Yellow Change	3.0	4.5	3.8	4.4	3.0	5.1
Red Clear	2.3	1.5	2.5	1.4	3.2	1.7
Walk *	-	-	-	-	-	-
Pedestrian Clear	-	-	-	-	-	-
Added Initial *	-	1.5	-	-	-	1.5
Maximum Initial *	-	40	-	-	-	40
Time Before Reduction *	-	20	-	-	-	20
Time To Reduce *	-	40	-	-	-	40
Minimum Gap	-	3.0	-	-	-	3.0
Recall Mode	-	MIN RECALL	-	-	-	MIN RECALL
Vehicle Call Memory	NON-LOCK	LOCK	NON-LOCK	NON-LOCK	NON-LOCK	LOCK
Dual Entry	-	-	-	-	-	-
Simultaneous Gap	ON	ON	ON	ON	ON	ON

* These values may be field adjusted. Do not adjust Min Green and Extension times for phases 2 and 6 lower than what is shown. Min Green for all other phases should not be lower than 4 seconds.

AECOM
NC Firm License No.: F-0342
5438 Wade Park Boulevard
Suite 200 Raleigh, NC 27607
Phone: 919-461-1100

Signal Upgrade - Temp Design 2 (TPM Phase III)

DOCUMENT NOT CONSIDERED FINAL UNLESS ALL SIGNATURES COMPLETED

Prepared for the Offices of:
Transportation Mobility and Safety Division
STATE OF NORTH CAROLINA DEPARTMENT OF TRANSPORTATION
Signal Design Section
750 N.Greenfield Pkwy,Garner,NC 27529

US 401 (Louisburg Road)
at
SR 2044 (Ligon Mill Road)

Division 5 | Wake County | Raleigh

PLAN DATE: Jan 2023 | REVIEWED BY: F.A. Campbell
PREPARED BY: H.W. Surti | REVIEWED BY:

SCALE 0 50 1"=50'

REVISIONS | INIT. | DATE

SEAL
NORTH CAROLINA PROFESSIONAL SEAL 034481 ENGINEER HEMANG M. SURTI

DocuSigned by: Hemang M. Surti 1/24/2023
E5F2B0B0A7A5481...

SIG. INVENTORY NO. 05-I252T2

1/24/2023
pw://aecomnaprod.bentley.com:AECOM_DS21_NA_2020:Documents:60609754-U-5748 Ligon Mill:900-CAD GIS:910_CAD:70_NCDOT_TIP:Traffic:Signals:Design:Signals:05125212_sig_dsn_2022XXXX.dgn
michael.cavenaugh

DocuSign Envelope ID: EE0A9FB1-617B-4D0E-A869-87C1A84AA294

PROJECT REFERENCE NO.	SHEET NO.
U-5748	Sig. 15.1

18 CHANNEL CONFLICT MONITOR PROGRAMMING DETAIL

(remove jumpers and set switches as shown)

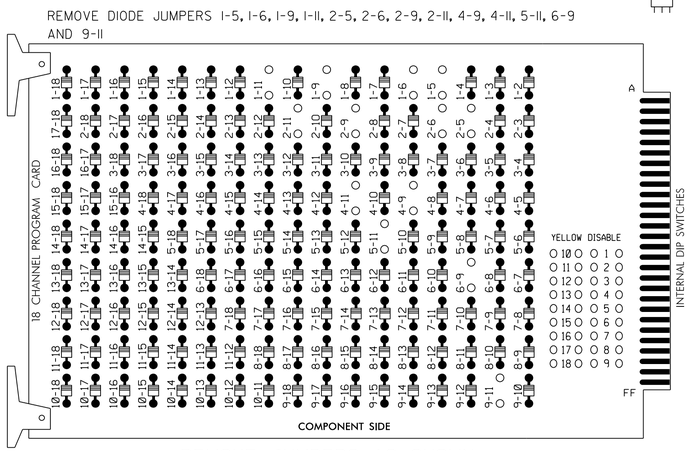

REMOVE JUMPERS AS SHOWN

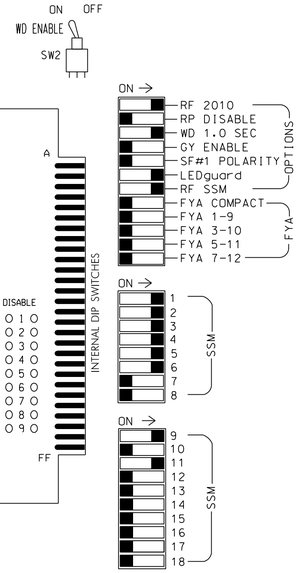

■ = DENOTES POSITION OF SWITCH

NOTES:

1. Card is provided with all diode jumpers in place. Removal of any jumper allows its channels to run concurrently.
2. Ensure jumpers SEL2-SEL5 and SEL9 are present on the monitor board.
3. Ensure that Red Enable is active at all times during normal operation.
4. Connect serial cable from conflict monitor to comm. port 1 of 2070 controller. Ensure conflict monitor communicates with 2070.

NOTES

1. To prevent "flash-conflict" problems, insert red flash program blocks for all unused vehicle load switches in the output file. The installer shall verify that signal heads flash in accordance with the Signal Plans.
2. Program controller to start up in phases 2 and 6 green.
3. Enable simultaneous gap-out feature, on controller unit, for all phases.
4. Program phases 2 and 6, on controller unit, for volume density operation.
5. The cabinet and controller are part of the Raleigh Signal System.

EQUIPMENT INFORMATION

CONTROLLER.....2070LX
CABINET.....332 W/ AUX
SOFTWARE.....SE-PAC2070
CABINET MOUNT.....BASE
OUTPUT FILE POSITIONS...18 WITH AUX. OUTPUT FILE
LOAD SWITCHES USED.....S1,S2,S4,S5,S7,S8,AUX S1, AUX S4
PHASES USED.....1,2,3,4,5,6
OVERLAP "A".....*
OVERLAP "B".....NOT USED
OVERLAP "C".....*
OVERLAP "D".....NOT USED

* See Sheet 2 for Overlap programming.

SIGNAL HEAD HOOK-UP CHART

LOAD SWITCH NO.	S1	S2	S3	S4		S5		S6	S7	S8	S9	S10	S11	S12	AUX S1	AUX S2	AUX S3	AUX S4	AUX S5	AUX S6
CMU CHANNEL NO.	1	2	13	3		4		14	5	6	15	7	8	16	9	10	17	11	12	18
PHASE	1	2	2 PED	3		4		4 PED	5	6	6 PED	7	8	8 PED	OLA	OLB	SPARE	OLC	OLD	SPARE
SIGNAL HEAD NO.	11	21,22	NU	31	32	41	44,45	NU	51	61,62	NU	NU	NU	NU	63	NU	NU	42,43, 46	NU	NU
RED		128		116	116	101	101			134					A121			A114		
YELLOW		129		117	117	102	102			135										
GREEN		130		118	118	103	103			136										
RED ARROW	125								131											
YELLOW ARROW	126								132						A122			A115		
GREEN ARROW	127			118		103			133						A123			A116		

NU = Not Used

INPUT FILE POSITION LAYOUT

(front view)

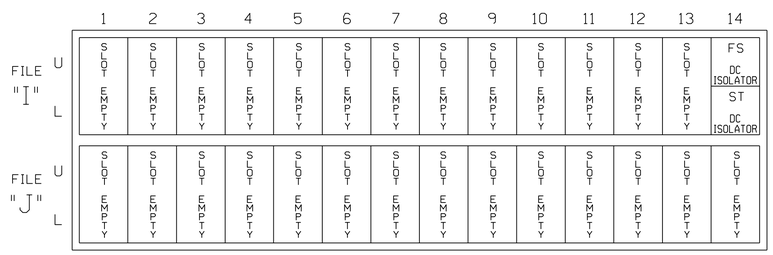

EX.: 1A, 2A, ETC. = LOOP NO.'S

FS = FLASH SENSE
ST = STOP TIME

INPUT FILE POSITION LEGEND: J2L
FILE J
SLOT 2
LOWER

SPECIAL DETECTOR NOTE

Install a video detection system for vehicle detection. Perform installation according to manufacturer's directions and NCDOT engineer-approved mounting locations to accomplish the detection schemes shown on the Signal Design Plans.

THIS ELECTRICAL DETAIL IS FOR
THE SIGNAL DESIGN: 05-1252T2
DESIGNED: Jan 2023
SEALED: 1/24/2023
REVISED:

Temporary Design 2 (TMP Phase III)
Electrical Detail - Sheet 1 of 2

DOCUMENT NOT CONSIDERED FINAL UNLESS ALL SIGNATURES COMPLETED

AECOM
NC Firm License No.: F-0342
5438 Wade Park Boulevard
Suite 200 Raleigh, NC 27607
Phone: 919-461-1100

ELECTRICAL AND PROGRAMMING DETAILS FOR:

Prepared for the Offices of:
Transportation Mobility and Safety Division
State of North Carolina
Department of Transportation
Signal Management Section
750 N.Greenfield Pkwy,Garner,NC 27529

US 401 (Louisburg Road)
at
SR 2044 (Ligon Mill Road)

Division 5 | Wake County | Raleigh

PLAN DATE:	Jan 2023	REVIEWED BY:	H.M. Surti
PREPARED BY:	A. Ravipati	REVIEWED BY:	

REVISIONS	INIT.	DATE

SEAL
NORTH CAROLINA PROFESSIONAL SEAL 034481 ENGINEER HEMANG M. SURTI

DocuSigned by: Hemang M. Surti AF12B8DC7A5A41... 1/24/2023

SIG. INVENTORY NO. 05-1252T2

1/24/2023
pw:\\aecom-na-pw.bentley.com:AECOM_DS21_NA_2020\Documents\60609754-U-5748 Ligon Mill\900-CAD GIS\910_CAD\70_NCDOT_TIP\Traffic\Signals\Design\Signals\Electrical Details.2022\05125212_sm.dgn
michael.cavenaugh

DocuSign Envelope ID: EE0A9FB1-617B-4D0E-A869-87C1A84AA294

PROJECT REFERENCE NO.	SHEET NO.
U-5748	Sig. 15.2

OVERLAP PROGRAMMING FOR OVERLAPS A & C

1. From Main Menu select **4 - UNIT DATA**
2. From UNIT DATA Submenu select **3 - OVERLAP DATA**

Use Up/Dn/Left/Right keys to position cursor on the desired Overlap. Use the NEXT key to select the overlap type. Press the ENT key and then program as per the Overlap screen(s) shown.

```
OVERLAP DATA

   A: STD   E: ---   I: ---   M: ---
   B: ---   F: ---   J: ---   N: ---
   C: STD   G: ---   K: ---   O: ---
   D: ---   H: ---   L: ---   P: ---

 PREV/NEXT TO CYCLE
```

OVERLAP A

Use Up/Dn/Left/Right keys to position cursor on Overlap 'A', use the NEXT key to select 'STD', then press ENT

```
OVERLAP - A        12345678 90123456
          PARENTS: 00010100 00000000
     +GRN PHASES:  00000000 00000000
     -G/Y PHASES:  00000000 00000000
     -PED PHASES:  00000000 00000000
 TRAIL GREEN STANDARD:   0  YEL/10:  40
 TRAIL GREEN  PREEMPT:   0  YEL/10:  20
```

Press ESC

↓

OVERLAP C

Use Up/Dn/Left/Right keys to position cursor on Overlap 'C', use the NEXT key to select 'STD', then press ENT

```
OVERLAP - C        12345678 90123456
          PARENTS: 00011000 00000000
     +GRN PHASES:  00000000 00000000
     -G/Y PHASES:  00000000 00000000
     -PED PHASES:  00000000 00000000
 TRAIL GREEN STANDARD:   0  YEL/10:  40
 TRAIL GREEN  PREEMPT:   0  YEL/10:  20
```

END OVERLAP PROGRAMMING

FLASHER CIRCUIT MODIFICATION DETAIL

IN ORDER TO INSURE THAT SIGNALS FLASH CONCURRENTLY ON THE SAME APPROACH, MAKE THE FOLLOWING FLASHER CIRCUIT CHANGES:

1. ON REAR OF PDA - REMOVE WIRE FROM TERM. T2-4 AND TERMINATE ON T2-2.
2. ON REAR OF PDA - REMOVE WIRE FROM TERM. T2-5 AND TERMINATE ON T2-3.
3. REMOVE FLASHER UNIT 2.

THE CHANGES LISTED ABOVE TIES ALL PHASES AND OVERLAPS TO FLASHER UNIT 1.

THIS ELECTRICAL DETAIL IS FOR
THE SIGNAL DESIGN: 05-1252T2
DESIGNED: Jan 2023
SEALED: 1/24/2023
REVISED:

Temporary Design 2 (TMP Phase III)
Electrical Detail - Sheet 2 of 2

DOCUMENT NOT CONSIDERED FINAL UNLESS ALL SIGNATURES COMPLETED

AECOM
NC Firm License No.: F-0342
5438 Wade Park Boulevard
Suite 200 Raleigh, NC 27607
Phone: 919-461-1100

ELECTRICAL AND PROGRAMMING DETAILS FOR:

Prepared for the Offices of:
Transportation Mobility and Safety Division
STATE OF NORTH CAROLINA DEPARTMENT OF TRANSPORTATION
Signals Management Section
750 N.Greenfield Pkwy,Garner,NC 27529

US 401 (Louisburg Road)
at
SR 2044 (Ligon Mill Road)

Division 5 | Wake County | Raleigh

PLAN DATE:	Jan 2023	REVIEWED BY:	H.M. Surti
PREPARED BY:	A. Ravipati	REVIEWED BY:	

REVISIONS	INIT.	DATE

SEAL
NORTH CAROLINA PROFESSIONAL SEAL 034481 ENGINEER HEMANG M. SURTI

DocuSigned by: Hemang M. Surti 1/24/2023
DEVELOPER/ENGINEER
SIG. INVENTORY NO. 05-1252T2

1/24/2023
pw://aecom-na-pw.bentley.com:AECOM_DS21_NA_2020:Documents#60609754-U-5748 Ligon Mill#900-CAD GIS#910_CAD#70_NCDOT_TIP#Traffic#Signals#Design#Signals#Electrical Details.2022#05125ZT2_sm.ele.2022XXXX.dgn
michael.cavenaugh

DocuSign Envelope ID: EE0A9FB1-617B-4D0E-A869-87C1A84AA294

PROJECT REFERENCE NO.	SHEET NO.
U-5748	Sig. 16.0

PHASING DIAGRAM

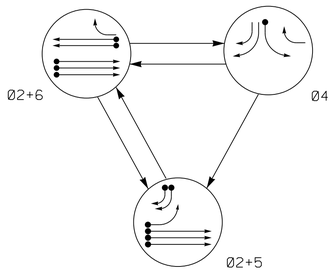

TABLE OF OPERATION

SIGNAL FACE	PHASE Ø2+5	PHASE Ø2+6	PHASE Ø4	PHASE FLASH
21, 22, 23	G	G	R	Y
41	←R	←R	←	←R
42, 43	→	R	→	R
51	←	←R	←R	←R
61	R	↑	R	Y
62	R	G	R	Y
63	R	→	→	→Y

SE-PAC 2070 LOOP & DETECTOR UNIT INSTALLATION CHART

INDUCTIVE LOOPS						DETECTOR PROGRAMMING															
							TIMING		OPERATION MODE										STATUS	
ZONE NO.	SIZE (ft)	TURNS	DIST. FROM STOPBAR (ft)	NEW	EXISTING	ASSIGNED PHASE	DELAY	EXTEND (STRETCH)	0 VEHICLE	1 PEDESTRIAN	2 1 CALL	3 STOP A	4 STOP B	5 PROTFER LEFT	6 PROTFER THROUGH	7 AND	SWITCH	SYSTEM LOOPS	NEW	EXISTING
2A ✳	6X6	✳	355	✳	-	2	- SEC.	- SEC.	X	-	-	-	-	-	-	-	-	-	✳	-
2B ✳	6X6	✳	355	✳	-	2	- SEC.	- SEC.	X	-	-	-	-	-	-	-	-	-	✳	-
2C ✳	6X6	✳	355	✳	-	2	- SEC.	- SEC.	X	-	-	-	-	-	-	-	-	-	✳	-
4A ✳	6X40	✳	0	✳	-	4	- SEC.	- SEC.	X	-	-	-	-	-	-	-	-	-	✳	-
5A ✳	6X40	✳	0	✳	-	5	- SEC.	- SEC.	X	-	-	-	-	-	-	-	-	-	✳	-
5B ✳	6X40	✳	0	✳	-	5	15 SEC.	- SEC.	X	-	-	-	-	-	-	-	-	-	✳	-
5C ✳	6X40	✳	0	✳	-	5	15 SEC.	- SEC.	X	-	-	-	-	-	-	-	-	-	✳	-
6A ✳	6X6	✳	355	✳	-	6	- SEC.	- SEC.	X	-	-	-	-	-	-	-	-	-	✳	-
6B ✳	6X6	✳	355	✳	-	6	- SEC.	- SEC.	X	-	-	-	-	-	-	-	-	-	✳	-

✳ Video Detection Zone

3 Phase
Fully Actuated
(Raleigh Signal System)

NOTES

1. Refer to "Roadway Standard Drawings NCDOT" dated January 2018 and "Standard Specifications for Roads and Structures" dated January 2018.
2. Do not program signal for late night flashing operation unless otherwise directed by the Engineer.
3. Phase 5 may be lagged.
4. Reposition existing signal heads numbered 21, 22, 51, 62, and 63.
5. Remove existing signal heads numbered 31, 32, 44, and 45.
6. Set all detector units to presence mode.
7. This intersection uses video detection. Install detectors according to the manufacturer's instructions to achieve the desired detection.
8. Maximum times shown in timing chart are for free-run operation only. Coordinated signal system timing values supersede these values.

SIGNAL FACE I.D.

All Heads L.E.D.

PHASING DIAGRAM DETECTION LEGEND

- DETECTED MOVEMENT
- UNDETECTED MOVEMENT (OVERLAP)
- UNSIGNALIZED MOVEMENT
- PEDESTRIAN MOVEMENT

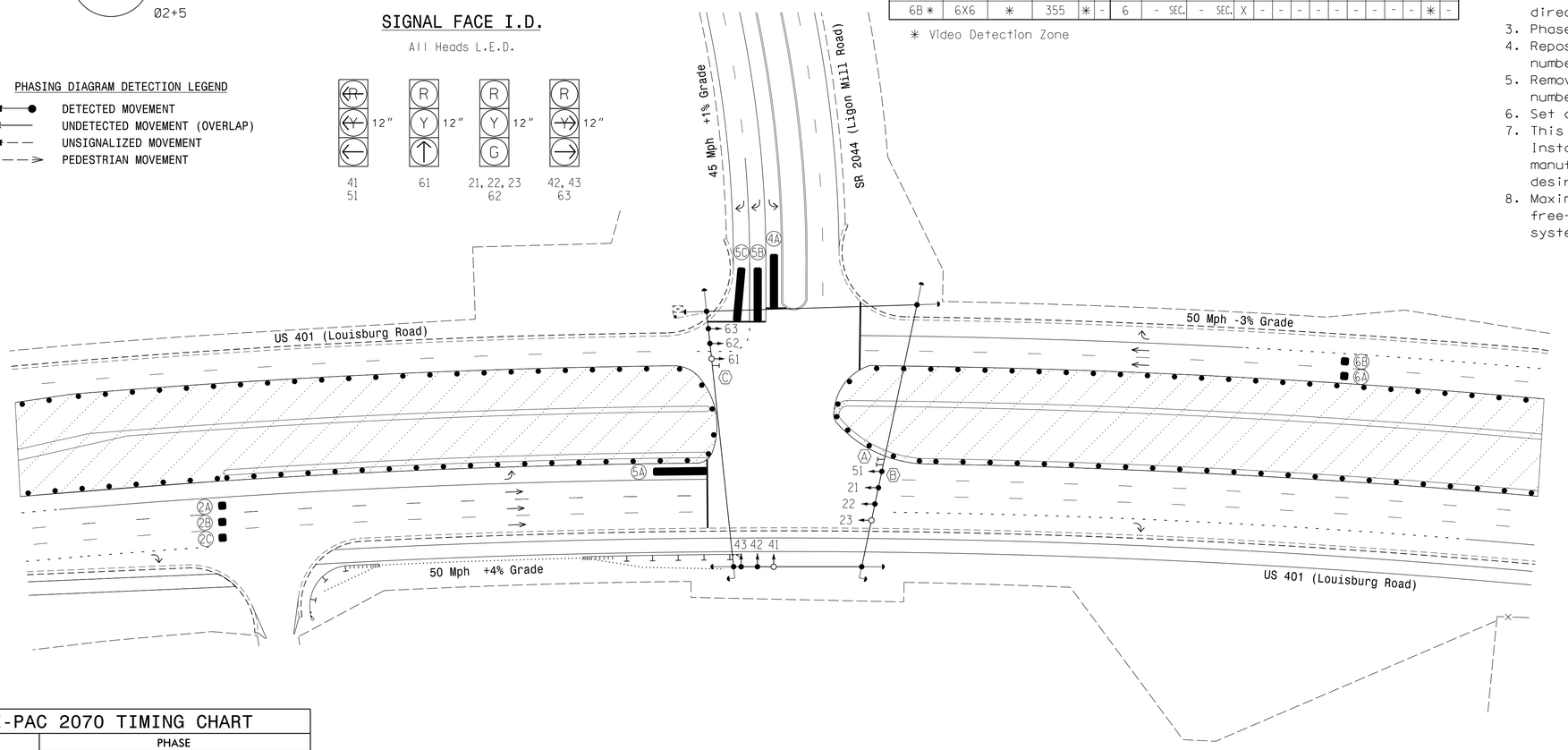

LEGEND

PROPOSED		EXISTING
	Traffic Signal Head	
	Modified Signal Head	N/A
	Sign	
	Pedestrian Signal Head	
	Signal Pole with Guy	
	Signal Pole with Sidewalk Guy	
	Inductive Loop Detector	
	Controller & Cabinet	
	Junction Box	
	2-in Underground Conduit	
N/A	Right of Way	
	Directional Arrow	
	Video Detection Zone	
	Construction Zone	
	Construction Zone Drums	
N/A	Noise Wall	
N/A	Guardrail	
Ⓐ	No U-Turn Sign (R3-4)	Ⓐ
Ⓑ	Left Arrow "ONLY" Sign (R3-5L)	Ⓑ
Ⓒ	"NO U-TURN/NO LEFT TURN" Sign (R3-18)	Ⓒ

SE-PAC 2070 TIMING CHART

FEATURE	PHASE 2	PHASE 4	PHASE 5	PHASE 6
Min Green *	14	7	7	14
Passage Gap *	6.0	2.0	2.0	6.0
Maximum Green *	120	30	35	120
Yellow Change	4.5	3.0	3.0	5.1
Red Clear	1.6	3.8	3.9	1.6
Walk *	-	-	-	-
Pedestrian Clear	-	-	-	-
Added Initial *	1.5	-	-	1.5
Maximum Initial *	40	-	-	40
Time Before Reduction *	20	-	-	20
Time To Reduce *	40	-	-	40
Minimum Gap	3.0	-	-	3.0
Recall Mode	MIN RECALL	-	-	MIN RECALL
Vehicle Call Memory	LOCK	NON-LOCK	NON-LOCK	LOCK
Dual Entry	-	-	-	-
Simultaneous Gap	ON	ON	ON	ON

* These values may be field adjusted. Do not adjust Min Green and Extension times for phases 2 and 6 lower than what is shown. Min Green for all other phases should not be lower than 4 seconds.

Signal Upgrade - Temp Design 3 (TMP Phase IV)

DOCUMENT NOT CONSIDERED FINAL UNLESS ALL SIGNATURES COMPLETED

AECOM
NC Firm License No.: F-0342
5438 Wade Park Boulevard
Suite 200 Raleigh, NC 27607
Phone: 919-461-1100

Prepared for the Offices of:
Transportation Mobility and Safety Division
Signal Design Section
750 N.Greenfield Pkwy,Garner,NC 27529

SCALE 0 50 1"=50'

US 401 (Louisburg Road)
at
SR 2044 (Ligon Mill Road)

Division 5 | Wake County | Raleigh

PLAN DATE: Jan 2023 | REVIEWED BY: F.A. Campbell
PREPARED BY: H.M. Surti | REVIEWED BY:

REVISIONS	INIT.	DATE

SEAL
NORTH CAROLINA PROFESSIONAL SEAL 034481 ENGINEER HEMANG M. SURTI

DocuSigned by: Hemang M. Surti 1/24/2023
ENGINEER MANAGER

SIG. INVENTORY NO. 05-1252T3

1/24/2023
pw:\\aecom-na-pw.bentley.com:AECOM_DS21_NA_2020\Documents\60609754-U-5748 Ligon Mill\900-CAD GIS\910_CAD\70_NCDOT_TIP\Traffic\Signals\Design\Signals\05125213_sig_dsn_2022XXX.dgn
michael.cavenaugh

DocuSign Envelope ID: EE0A9FB1-617B-4D0E-A869-87C1A84AA294

PROJECT REFERENCE NO.	SHEET NO.
U-5748	Sig. 16.1

18 CHANNEL CONFLICT MONITOR PROGRAMMING DETAIL

(remove jumpers and set switches as shown)

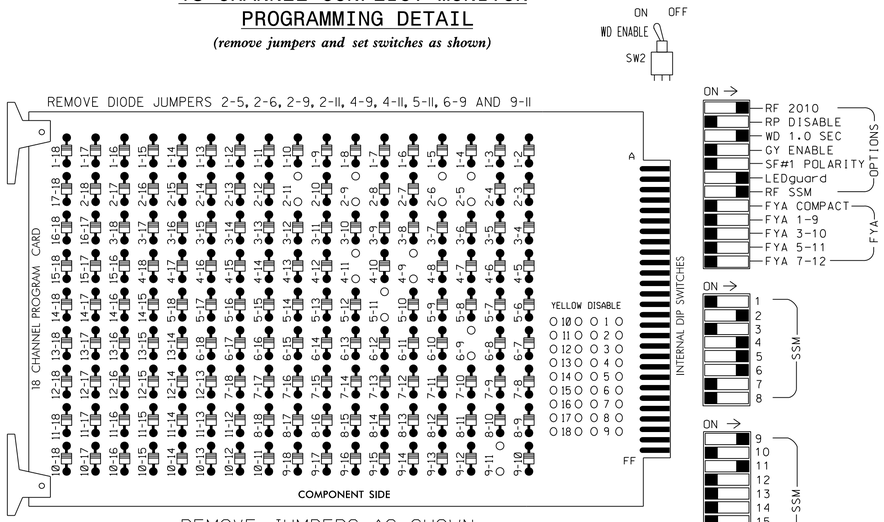

REMOVE JUMPERS AS SHOWN

NOTES:

1. Card is provided with all diode jumpers in place. Removal of any jumper allows its channels to run concurrently.
2. Ensure jumpers SEL2-SEL5 and SEL9 are present on the monitor board.
3. Ensure that Red Enable is active at all times during normal operation.
4. Connect serial cable from conflict monitor to comm. port 1 of 2070 controller. Ensure conflict monitor communicates with 2070.

NOTES

1. To prevent "flash-conflict" problems, insert red flash program blocks for all unused vehicle load switches in the output file. The installer shall verify that signal heads flash in accordance with the Signal Plans.
2. Program controller to start up in phases 2 and 6 green.
3. Enable simultaneous gap-out feature, on controller unit, for all phases.
4. Program phases 2 and 6, on controller unit, for volume density operation.
5. The cabinet and controller are part of the Raleigh Signal System.

EQUIPMENT INFORMATION

CONTROLLER.....2070LX
CABINET.....332 W/ AUX
SOFTWARE.....SE-PAC2070
CABINET MOUNT.....BASE
OUTPUT FILE POSITIONS...18 WITH AUX. OUTPUT FILE
LOAD SWITCHES USED.....S2,S5,S7,S8,AUX S1,AUX S4
PHASES USED.....2,4,5,6
OVERLAP "A".....*
OVERLAP "B".....NOT USED
OVERLAP "C".....*
OVERLAP "D".....NOT USED

* See Sheet 2 for Overlap programming.

SIGNAL HEAD HOOK-UP CHART

LOAD SWITCH NO.	S1	S2	S3	S4	S5	S6	S7	S8		S9	S10	S11	S12	AUX S1	AUX S2	AUX S3	AUX S4	AUX S5	AUX S6
CMU CHANNEL NO.	1	2	13	3	4	14	5	6		15	7	8	16	9	10	17	11	12	18
PHASE	1	2	2 PED	3	4	4 PED	5	6		6 PED	7	8	8 PED	OLA	OLB	SPARE	OLC	OLD	SPARE
SIGNAL HEAD NO.	NU	21,22, 23	NU	NU	41	NU	51	61	62	NU	NU	NU	NU	63	NU	NU	42,43	NU	NU
RED		128						134	134					A121			A114		
YELLOW		129						135	135										
GREEN		130							136										
RED ARROW					101		131												
YELLOW ARROW					102		132							A122			A115		
GREEN ARROW					103		133	136						A123			A116		

NU = Not Used

INPUT FILE POSITION LAYOUT

(front view)

		1	2	3	4	5	6	7	8	9	10	11	12	13	14
FILE "I"	U	SLOT	SLOT	SLOT	SLOT	SLOT	SLOT	SLOT	SLOT	SLOT	SLOT	SLOT	SLOT	SLOT	FS DC ISOLATOR
	L	EMPTY	EMPTY	EMPTY	EMPTY	EMPTY	EMPTY	EMPTY	EMPTY	EMPTY	EMPTY	EMPTY	EMPTY	EMPTY	ST DC ISOLATOR
FILE "J"	U	SLOT	SLOT	SLOT	SLOT	SLOT	SLOT	SLOT	SLOT	SLOT	SLOT	SLOT	SLOT	SLOT	SLOT
	L	EMPTY	EMPTY	EMPTY	EMPTY	EMPTY	EMPTY	EMPTY	EMPTY	EMPTY	EMPTY	EMPTY	EMPTY	EMPTY	EMPTY

EX.: 1A, 2A, ETC. = LOOP NO.'S

FS = FLASH SENSE
ST = STOP TIME

INPUT FILE POSITION LEGEND: J2L

FILE J
SLOT 2
LOWER

SPECIAL DETECTOR NOTE

Install a video detection system for vehicle detection. Perform installation according to manufacturer's directions and NCDOT engineer-approved mounting locations to accomplish the detection schemes shown on the Signal Design Plans.

THIS ELECTRICAL DETAIL IS FOR
THE SIGNAL DESIGN: 05-1252T3
DESIGNED: Jan 2023
SEALED: 1/24/2023
REVISED:

Temporary Design 3 (TMP Phase IV)
Electrical Detail - Sheet 1 of 2

DOCUMENT NOT CONSIDERED FINAL UNLESS ALL SIGNATURES COMPLETED

AECOM
NC Firm License No.: F-0342
5438 Wade Park Boulevard
Suite 200 Raleigh, NC 27607
Phone: 919-461-1100

ELECTRICAL AND PROGRAMMING DETAILS FOR:

Prepared for the Offices of:
Traffic Engineering Mobility and Safety Division
Signals Management Section
750 N.Greenfield Pkwy,Garner,NC 27529

US 401 (Louisburg Road)
at
SR 2044 (Ligon Mill Road)

Division 5 | Wake County | Raleigh

PLAN DATE:	Jan 2023	REVIEWED BY:	H.M. Surti
PREPARED BY:	A. Ravipati	REVIEWED BY:	

REVISIONS	INIT.	DATE

SEAL
NORTH CAROLINA PROFESSIONAL SEAL 034481 ENGINEER HEMANG M. SURTI

DocuSigned by: Hemang M. Surti AF12B0DC7A5A41 1/24/2023

SIG. INVENTORY NO. 05-1252T3

1/24/2023
pw://aecom-na-pw.bentley.com:AECOM_DS21_NA_2020\Documents\60609754-U-5748 Ligon Mill\900-CAD\CIS\910_CAD\70_NCDOT_TIP\Traffic\Signals\Design\Signals\Electrical Details.2022\05125273_sm.ele.2022XXXX.dgn
michael.cavenaugh

DocuSign Envelope ID: EE0A9FB1-617B-4D0E-A869-87C1A84AA294

PROJECT REFERENCE NO.	SHEET NO.
U-5748	Sig. 16.2

OVERLAP PROGRAMMING FOR OVERLAPS A & C

1. From Main Menu select **4 - UNIT DATA**
2. From UNIT DATA Submenu select **3 - OVERLAP DATA**

Use Up/Dn/Left/Right keys to position cursor on the desired Overlap. Use the NEXT key to select the overlap type. Press the ENT key and then program as per the Overlap screen(s) shown.

```
OVERLAP DATA

   A: STD   E: ---   I: ---   M: ---
   B: ---   F: ---   J: ---   N: ---
   C: STD   G: ---   K: ---   O: ---
   D: ---   H: ---   L: ---   P: ---

 PREV/NEXT TO CYCLE
```

OVERLAP A

Use Up/Dn/Left/Right keys to position cursor on Overlap 'A', use the NEXT key to select 'STD', then press ENT

```
OVERLAP - A        12345678 90123456
          PARENTS: 00010100 00000000
     +GRN PHASES:  00000000 00000000
     -G/Y PHASES:  00000000 00000000
     -PED PHASES:  00000000 00000000
 TRAIL GREEN STANDARD:   0  YEL/10:  40
 TRAIL GREEN  PREEMPT:   0  YEL/10:  20
```

Press ESC

OVERLAP C

Use Up/Dn/Left/Right keys to position cursor on Overlap 'C', use the NEXT key to select 'STD', then press ENT

```
OVERLAP - C        12345678 90123456
          PARENTS: 00011000 00000000
     +GRN PHASES:  00000000 00000000
     -G/Y PHASES:  00000000 00000000
     -PED PHASES:  00000000 00000000
 TRAIL GREEN STANDARD:   0  YEL/10:  40
 TRAIL GREEN  PREEMPT:   0  YEL/10:  20
```

END OVERLAP PROGRAMMING

FLASHER CIRCUIT MODIFICATION DETAIL

IN ORDER TO INSURE THAT SIGNALS FLASH CONCURRENTLY ON THE SAME APPROACH, MAKE THE FOLLOWING FLASHER CIRCUIT CHANGES:

1. ON REAR OF PDA - REMOVE WIRE FROM TERM. T2-4 AND TERMINATE ON T2-2.
2. ON REAR OF PDA - REMOVE WIRE FROM TERM. T2-5 AND TERMINATE ON T2-3.
3. REMOVE FLASHER UNIT 2.

THE CHANGES LISTED ABOVE TIES ALL PHASES AND OVERLAPS TO FLASHER UNIT 1.

THIS ELECTRICAL DETAIL IS FOR
THE SIGNAL DESIGN: 05-1252T3
DESIGNED: Jan 2023
SEALED: 1/24/2023
REVISED:

Temporary Design 3 (TMP Phase IV)
Electrical Detail - Sheet 2 of 2

DOCUMENT NOT CONSIDERED FINAL UNLESS ALL SIGNATURES COMPLETED

AECOM
NC Firm License No.: F-0342
5438 Wade Park Boulevard
Suite 200 Raleigh, NC 27607
Phone: 919-461-1100

ELECTRICAL AND PROGRAMMING DETAILS FOR:

Prepared for the Offices of:
Mobility and Safety Division
Signals Management Section
750 N.Greenfield Pkwy,Garner,NC 27529

US 401 (Louisburg Road)
at
SR 2044 (Ligon Mill Road)

Division 5 | Wake County | Raleigh

PLAN DATE:	Jan 2023	REVIEWED BY:	H.M. Surti
PREPARED BY:	A. Ravipati	REVIEWED BY:	

REVISIONS	INIT.	DATE

SEAL
NORTH CAROLINA PROFESSIONAL SEAL 034481 ENGINEER HEMANG M. SURTI

DocuSigned by: Hemang M. Surti 1/24/2023
SIG. INVENTORY NO. 05-1252T3

1/24/2023
pw:\\aecom-na-pw.bentley.com:AECOM_DS21_NA_2020\Documents\60609754-U-5748 Ligon Mill\900-CAD GIS\910_CAD\70_NCDOT_TIP\Traffic\Signals\Design\Signals\Electrical Details.2022\05125273_sm.ele.2022XXXX.dgn
michael.cavenaugh

DocuSign Envelope ID: EE0A9FB1-617B-4D0E-A869-87C1A84AA294

PROJECT REFERENCE NO.	SHEET NO.
U-5748	Sig. 17.0

PHASING DIAGRAM

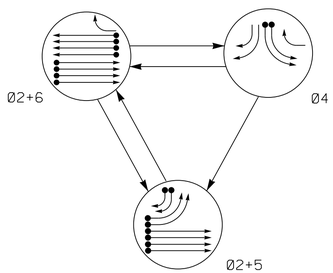

TABLE OF OPERATION

SIGNAL FACE	PHASE Ø2+5	PHASE Ø2+6	PHASE Ø4	FLASH
21	↑	↑	R	Y
22, 23, 24	G	G	R	Y
41, 42	↰R	↰R	←	↰R
43, 44	→	R	→	R
51, 52	←	↰R	↰R	↰R
61	R	↑	R	Y
62, 63, 64	R	G	R	Y
65	R	→	→	↰Y

SE-PAC 2070 LOOP & DETECTOR UNIT INSTALLATION CHART

INDUCTIVE LOOPS						DETECTOR PROGRAMMING															
							TIMING		OPERATION MODE										STATUS	
LOOP NO.	SIZE (ft)	TURNS	DIST. FROM STOPBAR (ft)	NEW	EXISTING	ASSIGNED PHASE	DELAY	EXTEND (STRETCH)	0 VEHICLE	1 PEDESTRIAN	2 1 CALL	3 STOP A	4 STOP B	5 PROT/PER LEFT	6 PROT/PER THROUGH	7 AND	SWITCH	SYSTEM LOOPS	NEW	EXISTING
2A	6X6	5	355	X	-	2	- SEC.	- SEC.	X	-	-	-	-	-	-	-	-	-	X	-
2B	6X6	5	355	X	-	2	- SEC.	- SEC.	X	-	-	-	-	-	-	-	-	-	X	-
2C	6X6	5	355	X	-	2	- SEC.	- SEC.	X	-	-	-	-	-	-	-	-	-	X	-
2D	6X6	5	355	X	-	2	- SEC.	- SEC.	X	-	-	-	-	-	-	-	-	-	X	-
4A	6X40	2-4-2	0	X	-	4	- SEC.	- SEC.	X	-	-	-	-	-	-	-	-	-	X	-
4B	6X40	2-4-2	0	X	-	4	- SEC.	- SEC.	X	-	-	-	-	-	-	-	-	-	X	-
5A	6X40	2-4-2	0	X	-	5	- SEC.	- SEC.	X	-	-	-	-	-	-	-	-	-	X	-
5B	6X40	2-4-2	0	X	-	5	- SEC.	- SEC.	X	-	-	-	-	-	-	-	-	-	X	-
5C	6X40	2-4-2	0	X	-	5	15 SEC.	- SEC.	X	-	-	-	-	-	-	-	-	-	X	-
5D	6X40	2-4-2	0	X	-	5	15 SEC.	- SEC.	X	-	-	-	-	-	-	-	-	-	X	-
6A	6X6	5	355	X	-	6	- SEC.	- SEC.	X	-	-	-	-	-	-	-	-	-	X	-
6B	6X6	5	355	X	-	6	- SEC.	- SEC.	X	-	-	-	-	-	-	-	-	-	X	-
6C	6X6	5	355	X	-	6	- SEC.	- SEC.	X	-	-	-	-	-	-	-	-	-	X	-
6D	6X6	5	355	X	-	6	- SEC.	- SEC.	X	-	-	-	-	-	-	-	-	-	X	-

3 Phase
Fully Actuated
(Raleigh Signal System)

NOTES

1. Refer to "Roadway Standard Drawings NCDOT" dated January 2018 and "Standard Specifications for Roads and Structures" dated January 2018.
2. Do not program signal for late night flashing operation unless otherwise directed by the Engineer.
3. Phase 5 may be lagged.
4. Set all detector units to presence mode.
5. Maximum times shown in timing chart are for free-run operation only. Coordinated signal system timing values supersede these values.

PHASING DIAGRAM DETECTION LEGEND

- DETECTED MOVEMENT
- UNDETECTED MOVEMENT (OVERLAP)
- UNSIGNALIZED MOVEMENT
- PEDESTRIAN MOVEMENT

SIGNAL FACE I.D.

All Heads L.E.D.

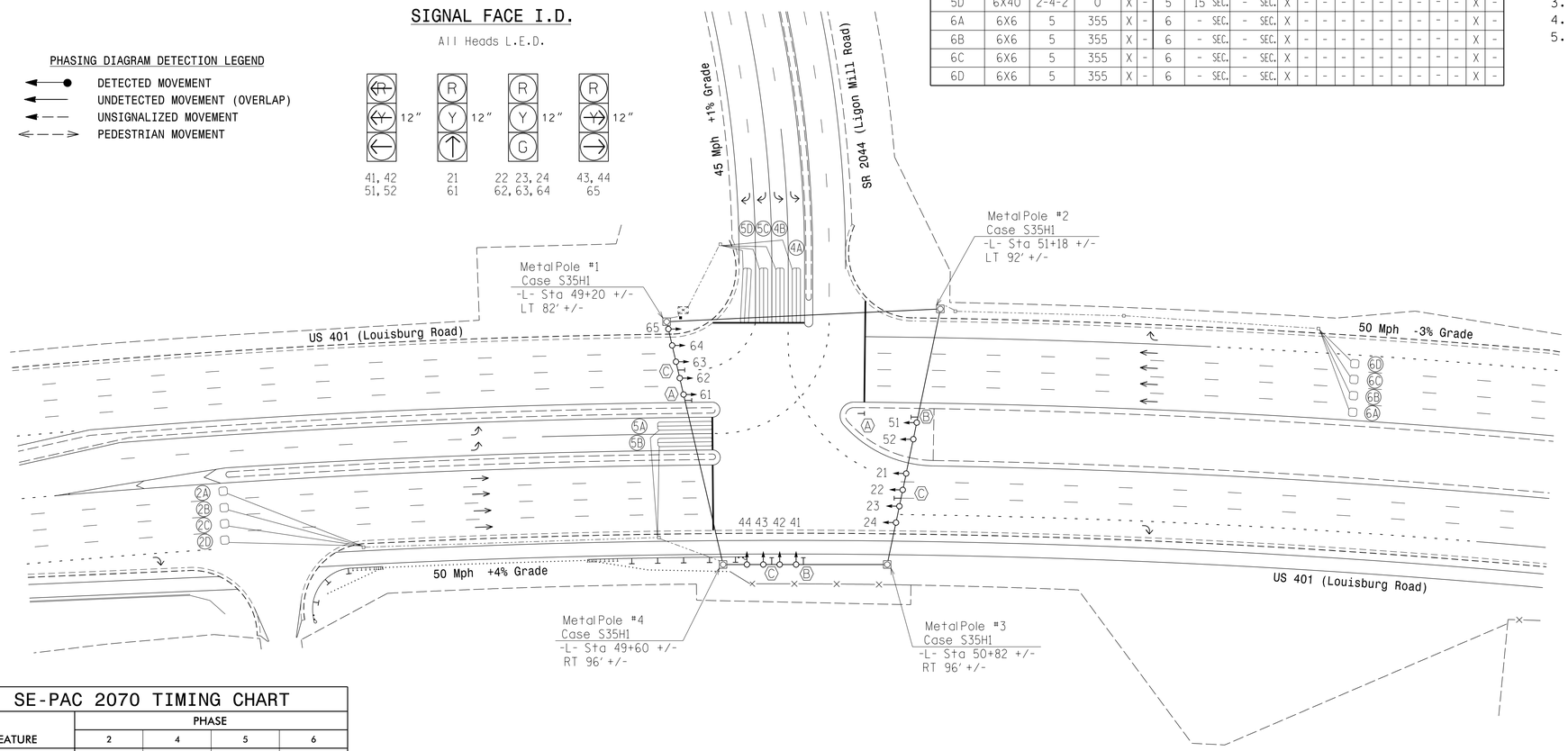

LEGEND

PROPOSED		EXISTING
	Traffic Signal Head	
	Modified Signal Head	N/A
	Sign	
	Pedestrian Signal Head	
	Signal Pole with Guy	
	Signal Pole with Sidewalk Guy	
	Inductive Loop Detector	
	Controller & Cabinet	
	Junction Box	
	2-in Underground Conduit	
N/A	Right of Way	
	Directional Arrow	
	Metal Strain Pole	
N/A	Noise Wall	
N/A	Guardrail	
Ⓐ	No U-Turn Sign (R3-4)	Ⓐ
Ⓑ	"U-TURN YIELD TO RIGHT TURN" Sign (R10-16)	Ⓑ
Ⓒ	Street Name Sign By Others (D3-1)	Ⓒ

SE-PAC 2070 TIMING CHART

FEATURE	PHASE 2	PHASE 4	PHASE 5	PHASE 6
Min Green *	14	7	7	14
Passage Gap *	6.0	2.0	2.0	6.0
Maximum Green *	120	30	35	120
Yellow Change	4.5	3.0	3.0	5.1
Red Clear	1.5	3.5	3.8	1.5
Walk *	-	-	-	-
Pedestrian Clear	-	-	-	-
Added Initial *	1.5	-	-	1.5
Maximum Initial *	40	-	-	40
Time Before Reduction *	20	-	-	20
Time To Reduce *	40	-	-	40
Minimum Gap	3.0	-	-	3.0
Recall Mode	MIN RECALL	-	-	MIN RECALL
Vehicle Call Memory	LOCK	NON-LOCK	NON-LOCK	LOCK
Dual Entry	-	-	-	-
Simultaneous Gap	ON	ON	ON	ON

* These values may be field adjusted. Do not adjust Min Green and Extension times for phases 2 and 6 lower than what is shown. Min Green for all other phases should not be lower than 4 seconds.

Signal Upgrade - Final Design

DOCUMENT NOT CONSIDERED FINAL UNLESS ALL SIGNATURES COMPLETED

AECOM
NC Firm License No.: F-0342
5438 Wade Park Boulevard
Suite 200 Raleigh, NC 27607
Phone: 919-461-1100

Prepared for the Offices of:
Transportation Mobility and Safety Division
Signal Design Section
750 N.Greenfield Pkwy,Garner,NC 27529

US 401 (Louisburg Road)
at
SR 2044 (Ligon Mill Road)

Division 5 Wake County Raleigh

PLAN DATE: Jan 2023 REVIEWED BY: F.A. Campbell
PREPARED BY: H.M. Surti REVIEWED BY:

SCALE 0 50 1"=50'

REVISIONS	INIT.	DATE

SEAL
NORTH CAROLINA PROFESSIONAL SEAL 034481 ENGINEER HEMANG M. SURTI

DocuSigned by: Hemang M. Surti 1/24/2023
SIGNATURE/DATE

SIG. INVENTORY NO. 05-1252

1/24/2023
bentleyuser@aecom-pw.bentley.com:AECOM.DS21_NA.2020\Documents\60609754-U-5748 Ligon Mill\900-CAD GIS\910_CAD\70_NCDOT_TIP\Traffic\Signals\Design\Signals\05-1252.sig.dgn
michael.cavenaugh

DocuSign Envelope ID: EE0A9FB1-617B-4D0E-A869-87C1A84AA294

PROJECT REFERENCE NO.	SHEET NO.
U-5748	Sig. 17.1

18 CHANNEL CONFLICT MONITOR PROGRAMMING DETAIL

(remove jumpers and set switches as shown)

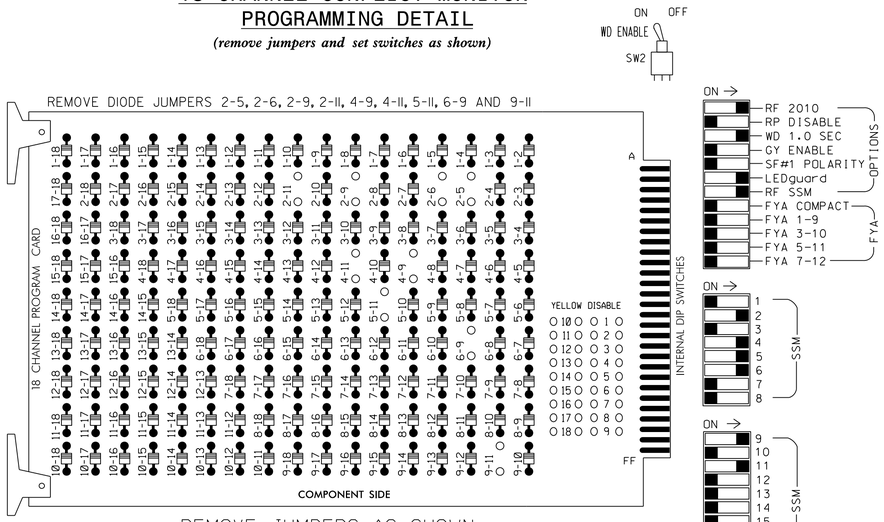

REMOVE JUMPERS AS SHOWN

■ = DENOTES POSITION OF SWITCH

NOTES:

1. Card is provided with all diode jumpers in place. Removal of any jumper allows its channels to run concurrently.
2. Ensure jumpers SEL2-SEL5 and SEL9 are present on the monitor board.
3. Ensure that Red Enable is active at all times during normal operation.
4. Connect serial cable from conflict monitor to comm. port 1 of 2070 controller. Ensure conflict monitor communicates with 2070.

NOTES

1. To prevent "flash-conflict" problems, insert red flash program blocks for all unused vehicle load switches in the output file. The installer shall verify that signal heads flash in accordance with the Signal Plans.
2. Program controller to start up in phases 2 and 6 green.
3. Enable simultaneous gap-out feature, on controller unit, for all phases.
4. Program phases 2 and 6, on controller unit, for volume density operation.
5. The cabinet and controller are part of the Raleigh Signal System.

EQUIPMENT INFORMATION

CONTROLLER.....2070LX
CABINET.....332 W/ AUX
SOFTWARE.....SE-PAC2070
CABINET MOUNT.....BASE
OUTPUT FILE POSITIONS...18 WITH AUX. OUTPUT FILE
LOAD SWITCHES USED.....S2,S5,S7,S8,AUX S1,AUX S4
PHASES USED.....2,4,5,6
OVERLAP "A".....*
OVERLAP "B".....NOT USED
OVERLAP "C".....*
OVERLAP "D".....NOT USED

* See Sheet 2 for Overlap programming.

SIGNAL HEAD HOOK-UP CHART

LOAD SWITCH NO.	S1	S2		S3	S4	S5	S6	S7	S8		S9	S10	S11	S12	AUX S1	AUX S2	AUX S3	AUX S4	AUX S5	AUX S6
CMU CHANNEL NO.	1	2		13	3	4	14	5	6		15	7	8	16	9	10	17	11	12	18
PHASE	1	2		2 PED	3	4	4 PED	5	6		6 PED	OLG	8	8 PED	OLA	OLB	SPARE	OLC	OLD	SPARE
SIGNAL HEAD NO.	NU	21	22,23, 24	NU	NU	41,42	NU	51,52	61	62,63, 64	NU	NU	NU	NU	65	NU	NU	43,44	NU	NU
RED		128	128						134	134					A121			A114		
YELLOW		129	129						135	135										
GREEN			130							136										
RED ARROW						101		131												
YELLOW ARROW						102		132							A122			A115		
GREEN ARROW		130				103		133	136						A123			A116		

NU = Not Used

INPUT FILE POSITION LAYOUT

(front view)

		1	2	3	4	5	6	7	8	9	10	11	12	13	14
FILE "I"	U	SLOT	Ø2 2A	Ø2 2C	SLOT	SLOT	Ø4 4A	SLOT	SLOT	SLOT	SLOT	SLOT	SLOT	SLOT	FS DC ISOLATOR
	L	EMPTY	Ø2 2B	Ø2 2D	EMPTY	EMPTY	Ø4 4B	EMPTY	EMPTY	EMPTY	EMPTY	EMPTY	EMPTY	EMPTY	ST DC ISOLATOR
FILE "J"	U	Ø5 5A	Ø6 6A	Ø6 6C	SLOT	SLOT	SLOT	SLOT	SLOT	Ø5 5C	SLOT	SLOT	SLOT	SLOT	SLOT
	L	Ø5 5B	Ø6 6B	Ø6 6D	EMPTY	EMPTY	EMPTY	EMPTY	EMPTY	Ø5 5D	EMPTY	EMPTY	EMPTY	EMPTY	EMPTY

EX.: 1A, 2A, ETC. = LOOP NO.'S

FS = FLASH SENSE
ST = STOP TIME

INPUT FILE CONNECTION & PROGRAMMING CHART

LOOP NO.	LOOP TERMINAL	INPUT FILE POS.	PIN NO.	DETECTOR NO.	NEMA PHASE	DELAY TIME	EXTEND (STRETCH) TIME
2A	TB2-5,6	I2U	39	3	2		
2B	TB2-7,8	I2L	43	4	2		
2C	TB2-9,10	I3U	63	5	2		
2D	TB2-11,12	I3L	76	6	2		
4A	TB4-9,10	I6U	41	11	4		
4B	TB4-11,12	I6L	45	12	4		
5A	TB3-1,2	J1U	55	19	5		
5B	TB3-3,4	J1L	55	19	5		
5C	TB7-9,10	J9U	59	37	5	15	
5D	TB7-11,12	J9L	61	38	5	15	
6A	TB3-5,6	J2U	40	21	6		
6B	TB3-7,8	J2L	44	22	6		
6C	TB3-9,10	J3U	64	23	6		
6D	TB3-11,12	J3L	77	24	6		

INPUT FILE POSITION LEGEND: J2L
FILE J
SLOT 2
LOWER

THIS ELECTRICAL DETAIL IS FOR
THE SIGNAL DESIGN: 05-1252
DESIGNED: Jan 2023
SEALED: 1/24/2023
REVISED:

Final Design
Electrical Detail - Sheet 1 of 2

DOCUMENT NOT CONSIDERED FINAL UNLESS ALL SIGNATURES COMPLETED

AECOM
NC Firm License No.: F-0342
5438 Wade Park Boulevard
Suite 200 Raleigh, NC 27607
Phone: 919-461-1100

ELECTRICAL AND PROGRAMMING DETAILS FOR:

Prepared for the Offices of:
Traffic Engineering Branch, Mobility and Safety Division, Department of Transportation, State of North Carolina, Signals Management Section
750 N.Greenfield Pkwy,Garner,NC 27529

US 401 (Louisburg Road)
at
SR 2044 (Ligon Mill Road)

Division 5 | Wake County | Raleigh

PLAN DATE:	Jan 2023	REVIEWED BY:	H.M. Surti
PREPARED BY:	A. Ravipati	REVIEWED BY:	

REVISIONS	INIT.	DATE

SEAL
NORTH CAROLINA PROFESSIONAL SEAL 034481 ENGINEER HEMANG M. SURTI

DocuSigned by: Hemang M. Surti AE120B0C17A5A41... 1/24/2023

SIG. INVENTORY NO. 05-1252

1/24/2023
pw:\\aecom-na-pw.bentley.com:AECOM_DS21_NA_2020\Documents\60609754-U-5748 Ligon Mill\900-CAD GIS\10_CAD\70_NCDOT_TIP\Traffic\Signals\Design\Signals\Electrical Details_2022\051252_sm_ele_2022XXXX.dgn
michael.cavenaugh

DocuSign Envelope ID: EE0A9FB1-617B-4D0E-A869-87C1A84AA294

PROJECT REFERENCE NO.	SHEET NO.
U-5748	Sig. 17.2

OVERLAP PROGRAMMING FOR OVERLAPS A & C

1. From Main Menu select **4 - UNIT DATA**
2. From UNIT DATA Submenu select **3 - OVERLAP DATA**

Use Up/Dn/Left/Right keys to position cursor on the desired Overlap. Use the NEXT key to select the overlap type. Press the ENT key and then program as per the Overlap screen(s) shown.

```
OVERLAP DATA

   A: STD   E: ---   I: ---   M: ---
   B: ---   F: ---   J: ---   N: ---
   C: STD   G: ---   K: ---   O: ---
   D: ---   H: ---   L: ---   P: ---

 PREV/NEXT TO CYCLE
```

OVERLAP A

Use Up/Dn/Left/Right keys to position cursor on Overlap 'A', use the NEXT key to select 'STD', then press ENT

```
OVERLAP - A        12345678 90123456
          PARENTS: 00010100 00000000
     +GRN PHASES:  00000000 00000000
     -G/Y PHASES:  00000000 00000000
     -PED PHASES:  00000000 00000000
 TRAIL GREEN STANDARD:   0  YEL/10:  40
 TRAIL GREEN  PREEMPT:   0  YEL/10:  20
```

Press ESC

↓

OVERLAP C

Use Up/Dn/Left/Right keys to position cursor on Overlap 'C', use the NEXT key to select 'STD', then press ENT

```
OVERLAP - C        12345678 90123456
          PARENTS: 00011000 00000000
     +GRN PHASES:  00000000 00000000
     -G/Y PHASES:  00000000 00000000
     -PED PHASES:  00000000 00000000
 TRAIL GREEN STANDARD:   0  YEL/10:  40
 TRAIL GREEN  PREEMPT:   0  YEL/10:  20
```

END OVERLAP PROGRAMMING

FLASHER CIRCUIT MODIFICATION DETAIL

IN ORDER TO INSURE THAT SIGNALS FLASH CONCURRENTLY ON THE SAME APPROACH, MAKE THE FOLLOWING FLASHER CIRCUIT CHANGES:

1. ON REAR OF PDA - REMOVE WIRE FROM TERM. T2-4 AND TERMINATE ON T2-2.
2. ON REAR OF PDA - REMOVE WIRE FROM TERM. T2-5 AND TERMINATE ON T2-3.
3. REMOVE FLASHER UNIT 2.

THE CHANGES LISTED ABOVE TIES ALL PHASES AND OVERLAPS TO FLASHER UNIT 1.

THIS ELECTRICAL DETAIL IS FOR
THE SIGNAL DESIGN: 05-1252
DESIGNED: Jan 2023
SEALED: 1/24/2023
REVISED:

Final Design
Electrical Detail - Sheet 2 of 2

DOCUMENT NOT CONSIDERED FINAL UNLESS ALL SIGNATURES COMPLETED

ELECTRICAL AND PROGRAMMING DETAILS FOR:

Prepared for the Offices of:

Intermodal Transportation Mobility and Safety Division
STATE OF NORTH CAROLINA DEPARTMENT OF TRANSPORTATION
Signals Management Section

750 N.Greenfield Pkwy,Garner,NC 27529

US 401 (Louisburg Road)
at
SR 2044 (Ligon Mill Road)

Division 5 | Wake County | Raleigh

PLAN DATE:	Jan 2023	REVIEWED BY:	H.M. Surti
PREPARED BY:	A. Ravipati	REVIEWED BY:	

REVISIONS	INIT.	DATE

SEAL

NORTH CAROLINA PROFESSIONAL SEAL 034481 ENGINEER HEMANG M. SURTI

DocuSigned by: Hemang M. Surti 1/24/2023
E1F3B0D07A4A4A1...

SIG. INVENTORY NO. 05-1252

AECOM
NC Firm License No.: F-0342
5438 Wade Park Boulevard
Suite 200 Raleigh, NC 27607
Phone: 919-461-1100

1/24/2023
pw:\\aecom-na-pw.bentley.com:AECOM_DS21_NA_2020\Documents\60609754-U-5748 Ligon Mill\900-CAD GIS\910_CAD\70_NCDOT_TIP\Traffic\Signals\Design\Signals\Electrical Details_2022\05252_sm_ele_2022XXXX.dgn
michael.cavenaugh

DocuSign Envelope ID: EE0A9FB1-617B-4D0E-A869-87C1A84AA294

PROJECT REFERENCE NO.	SHEET NO.
U-5748	Sig. 18.0

DEFAULT PHASING DIAGRAM

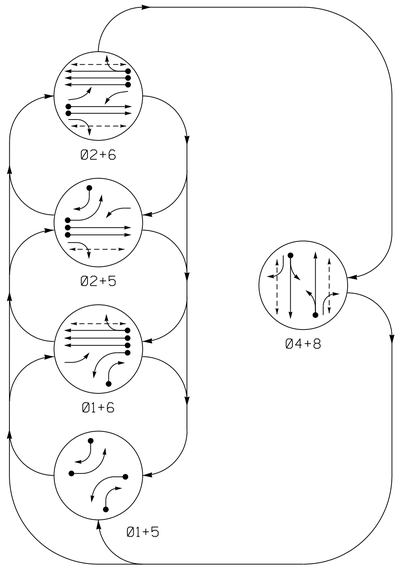

DEFAULT PHASING TABLE OF OPERATION

SIGNAL FACE	PHASE 01+5	01+6	02+5	02+6	04+8	FLASH
11	←	←	F Y	F Y	R	Y
21, 22	R	R	G	G	R	Y
23	R	R	F Y	F Y	R	Y
41, 43	R	R	R	R	G	R
42	R	R	R	R	G	R
51	←	F Y	←	F Y	R	Y
61, 62, 63	R	G	R	G	R	Y
81, 83	R	R	R	R	G	R
82	R	R	R	R	G	R
P21, P22	DW	DW	W	W	DW	DRK
P41, P42	DW	DW	DW	DW	W	DRK
P61, P62	DW	W	DW	W	DW	DRK
P81, P82	DW	DW	DW	DW	W	DRK

PHASING DIAGRAM DETECTION LEGEND

- DETECTED MOVEMENT
- UNDETECTED MOVEMENT (OVERLAP)
- UNSIGNALIZED MOVEMENT
- PEDESTRIAN MOVEMENT

SIGNAL FACE I.D.

All Heads L.E.D.

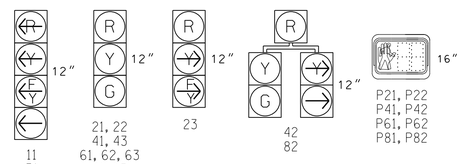

ALTERNATE PHASING DIAGRAM

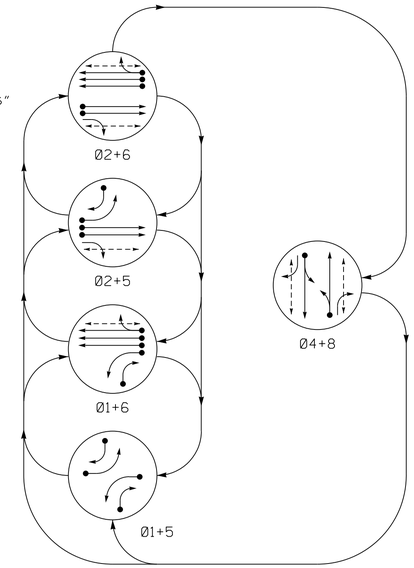

ALTERNATE PHASING TABLE OF OPERATION

SIGNAL FACE	PHASE 01+5	01+6	02+5	02+6	04+8	FLASH
11	←	←	R	R	R	Y
21, 22	R	R	G	G	R	Y
23	R	R	F Y	F Y	R	Y
41, 43	R	R	R	R	G	R
42	R	R	R	R	G	R
51	←	R	←	R	R	Y
61, 62, 63	R	G	R	G	R	Y
81, 83	R	R	R	R	G	R
82	R	R	R	R	G	R
P21, P22	DW	DW	W	W	DW	DRK
P41, P42	DW	DW	DW	DW	W	DRK
P61, P62	DW	W	DW	W	DW	DRK
P81, P82	DW	DW	DW	DW	W	DRK

5 Phase
Fully Actuated
(Raleigh Signal System)

NOTES

1. Refer to "Roadway Standard Drawings NCDOT" dated January 2018 and "Standard Specifications for Roads and Structures" dated January 2018.
2. Do not program signal for late night flashing operation unless otherwise directed by the Engineer.
3. Phase 1 and/or phase 5 may be lagged.
4. Set all detector units to presence mode.
5. Locate new cabinet so as not to obstruct sight distance of vehicles turning right on red.
6. In the event of loop replacement, refer to the current ITS and Signals Design Manual and submit a Plan of Record to the Signal Design Section.
7. Omit "WALK" and flashing "DON'T WALK" with no pedestrian calls.
8. Program pedestrian heads to countdown the flashing "Don't Walk" time only.
9. Maximum times shown in timing chart are for free-run operation only. Coordinated signal system timing values supersede these values.

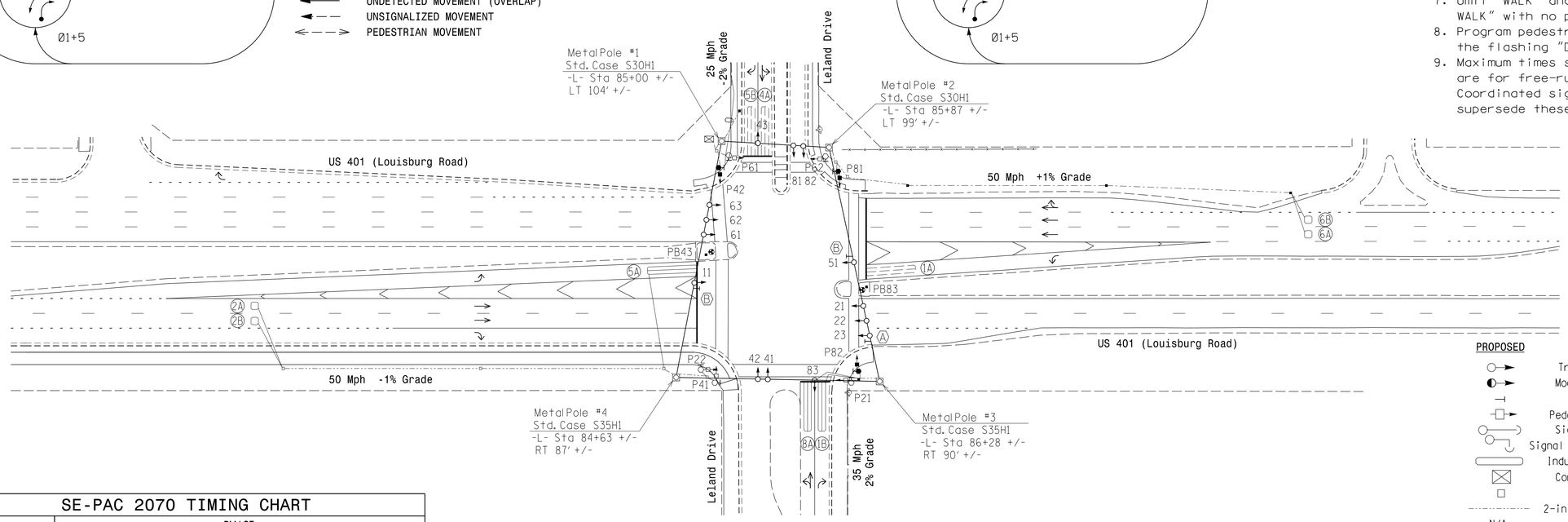

LEGEND

PROPOSED		EXISTING
	Traffic Signal Head	
	Modified Signal Head	N/A
	Sign	
	Pedestrian Signal Head	
	Signal Pole with Guy	
	Signal Pole with Sidewalk Guy	
	Inductive Loop Detector	
	Controller & Cabinet	
	Junction Box	
	2-in Underground Conduit	
N/A	Right of Way	
	Directional Arrow	
	Type I Pushbutton Post	
	Type II Signal Pedestal	
N/A	Curb Ramp	
	Metal Strain Pole	
A	Right Arrow "ONLY" Sign (R3-5R)	A
B	"U-TURN YIELD TO RIGHT TURN" Sign (R10-16)	B

SE-PAC 2070 TIMING CHART

FEATURE	PHASE 1	2	4	5	6	8
Min Green *	7	14	7	7	14	7
Passage Gap *	2.0	6.0	2.0	2.0	6.0	2.0
Maximum Green *	20	120	30	20	120	30
Yellow Change	3.0	4.9	3.3	3.0	4.9	3.7
Red Clear	3.7	2.0	3.9	3.5	2.0	3.2
Walk *	-	7	7	-	7	7
Pedestrian Clear	-	18	36	-	13	34
Added Initial *	-	1.5	-	-	1.5	-
Maximum Initial *	-	40	-	-	40	-
Time Before Reduction *	-	20	-	-	20	-
Time To Reduce *	-	40	-	-	40	-
Minimum Gap	-	3.0	-	-	3.0	-
Recall Mode	-	MIN RECALL	-	-	MIN RECALL	-
Vehicle Call Memory	NON-LOCK	LOCK	NON-LOCK	NON-LOCK	LOCK	NON-LOCK
Dual Entry	-	-	ON	-	-	ON
Simultaneous Gap	ON	ON	ON	ON	ON	ON

* These values may be field adjusted. Do not adjust Min Green and Extension times for phases 2 and 6 lower than what is shown. Min Green for all other phases should not be lower than 4 seconds.

SE-PAC 2070 LOOP & DETECTOR UNIT INSTALLATION CHART

INDUCTIVE LOOPS						DETECTOR PROGRAMMING															
							TIMING		OPERATION MODE										STATUS	
LOOP NO.	SIZE (ft)	TURNS	DIST. FROM STOPBAR (ft)	NEW	EXISTING	ASSIGNED PHASE	DELAY	EXTEND (STRETCH)	0 VEHICLE	1 PEDESTRIAN	2 1 CALL	3 STOP A	4 STOP B	5 PROTFER LEFT	6 PROTFER THROUGH	7 AND	SWITCH	SYSTEM LOOPS	NEW	EXISTING
1A	6X40	2-4-2	0		X	1	5 SEC.	- SEC.	X	-	-	-	-	-	-	-	-	-	X	-
1B	6X40	2-4-2	0	X	-	1	15 SEC.	- SEC.	X	-	-	-	-	-	-	-	-	-	X	-
2A	6X6	5	355	X	-	2	- SEC.	- SEC.	X	-	-	-	-	-	-	-	-	-	X	-
2B	6X6	5	355	X	-	2	- SEC.	- SEC.	X	-	-	-	-	-	-	-	-	-	X	-
4A	6X40	2-4-2	0	-	X	4	- SEC.	- SEC.	X	-	-	-	-	-	-	-	-	-	X	-
5A	6X40	2-4-2	0	X	-	5	5 SEC.	- SEC.	X	-	-	-	-	-	-	-	-	-	X	-
5B	6X40	2-4-2	0	-	X	5	15 SEC.	- SEC.	X	-	-	-	-	-	-	-	-	-	X	-
6A	6X6	5	355	X	-	6	- SEC.	- SEC.	X	-	-	-	-	-	-	-	-	-	X	-
6B	6X6	5	355	X	-	6	- SEC.	- SEC.	X	-	-	-	-	-	-	-	-	-	X	-
8A	6X40	2-4-2	0	X	-	8	- SEC.	- SEC.	X	-	-	-	-	-	-	-	-	-	X	-

AECOM
NC Firm License No.: F-0342
5438 Wade Park Boulevard
Suite 200 Raleigh, NC 27607
Phone: 919-461-1100

Signal Upgrade

Prepared for the Offices of:
Transportation Mobility and Safety Division
STATE OF NORTH CAROLINA DEPARTMENT OF TRANSPORTATION
Signal Design Section
750 N.Greenfield Pkwy,Garner,NC 27529

SCALE 0 50 1"=50'

US 401 (Louisburg Road) at Leland Drive

Division 5 | Wake County | Raleigh

PLAN DATE: Jan 2023 | REVIEWED BY: F.A. Campbell
PREPARED BY: H.M. Surti | REVIEWED BY:

REVISIONS	INIT.	DATE

DOCUMENT NOT CONSIDERED FINAL UNLESS ALL SIGNATURES COMPLETED

SEAL
NORTH CAROLINA PROFESSIONAL SEAL 034481 ENGINEER HEMANG M. SURTI

DocuSigned by: Hemang M. Surti 1/24/2023
SIG. INVENTORY NO. 05-2281

1/24/2023
pw:\\aecomusa-ngo-pw.bentley.com:AECOM_DS21_NA_2020\Documents\60609754-U-5748 Ligon Mill\900-CAD GIS\910_CAD\70_NCDOT_TIP\Traffic\Signals\Design\Signals\05228l_sig_dsn_2022XXX.dgn
mitchell.cavenaugh

DocuSign Envelope ID: EE0A9FB1-617B-4D0E-A869-87C1A84AA294

PROJECT REFERENCE NO.	SHEET NO.
U-5748	Sig. 18.1

18 CHANNEL CONFLICT MONITOR PROGRAMMING DETAIL

(remove jumpers and set switches as shown)

REMOVE DIODE JUMPERS 1-5, 1-6, 1-9, 1-11, 1-15, 2-5, 2-6, 2-9, 2-11, 2-12, 2-13, 2-15, 4-8, 4-14, 4-16, 5-9, 5-11, 5-12, 5-13, 6-9, 6-11, 6-12, 6-13, 6-15, 8-14, 8-16, 9-11, 9-12, 9-13, 9-15, 11-12, 11-13, 11-15, 12-13, 12-15, 13-15 AND 14-16.

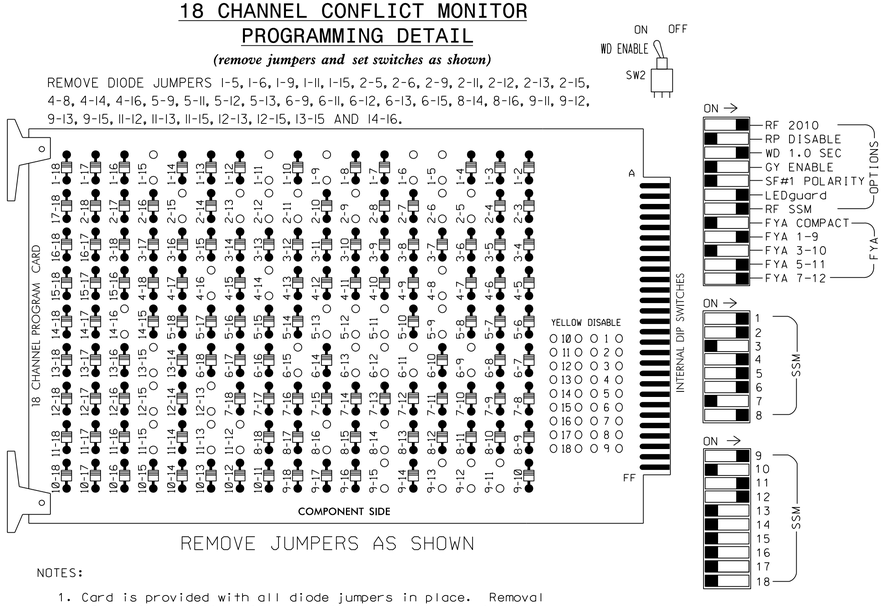

REMOVE JUMPERS AS SHOWN

■ = DENOTES POSITION OF SWITCH

NOTES:

1. Card is provided with all diode jumpers in place. Removal of any jumper allows its channels to run concurrently.
2. Ensure jumpers SEL2-SEL5 and SEL9 are present on the monitor board.
3. Ensure that Red Enable is active at all times during normal operation.
4. Connect serial cable from conflict monitor to comm. port 1 of 2070 controller. Ensure conflict monitor communicates with 2070.

NOTES

1. To prevent "flash-conflict" problems, insert red flash program blocks for all unused vehicle load switches in the output file. The installer shall verify that signal heads flash in accordance with the Signal Plans.
2. Program controller to start up in phases 2 and 6 green.
3. Enable simultaneous gap-out feature, on controller unit, for all phases.
4. Program phases 4 and 8, on controller unit, for dual entry.
5. Program phases 2 and 6, on controller unit, for volume density operation.
6. The cabinet and controller are part of the Raleigh City Signal System.

SIGNAL HEAD HOOK-UP CHART

LOAD SWITCH NO.	S1		S2	S3	S4	S5	S6	S7		S8	S9	S10	S11	S12	AUX S1	AUX S2	AUX S3	AUX S4	AUX S5	AUX S6
CMU CHANNEL NO.	1		2	13	3	4	14	5		6	15	7	8	16	9	10	17	11	12	18
PHASE	1		2	2 PED	3	4	4 PED	5		6	6 PED	7	8	8 PED	OLA	OLB	SPARE	OLC	OLD	SPARE
SIGNAL HEAD NO.	11★	82	21,22	P21, P22	NU	41,42 43	P41, P42	42	51★	61,62, 63	P61, P62	NU	81,82 83	P81, P82	11★	NU	NU	51★	23★	NU
RED		✳	128			101		✳		134			107						A101	
YELLOW			129			102				135			108							
GREEN			130			103				136			109							
RED ARROW															A121			A114		
YELLOW ARROW		126						132							A122			A115	A102	
FLASHING YELLOW ARROW															A123			A116	A103	
GREEN ARROW	127	127						133	133											
✋				113			104				119			110						
🚶				115			106				121			112						

NU = Not Used

★ See pictorial of head wiring in detail this sheet.

✳ Denotes install load resistor. See load resistor installation detail this sheet.

EQUIPMENT INFORMATION

CONTROLLER.....2070LX
CABINET.....332 W/ AUX
SOFTWARE.....SE-PAC2070
CABINET MOUNT.....BASE
OUTPUT FILE POSITIONS...18 WITH AUX. OUTPUT FILE
LOAD SWITCHES USED.....S1,S2,S3,S5,S6,S7,S8,S9,S11,S12
AUX S1,AUX S4,AUX S5
PHASES USED.....1,2,4,5,6,8,2PED,4PED,6PED,8PED
OVERLAP "A".....✳
OVERLAP "B".....NOT USED
OVERLAP "C".....✳
OVERLAP "D".....✳

✳ See Sheet 2 for Overlap programming.

INPUT FILE POSITION LAYOUT

(front view)

		1	2	3	4	5	6	7	8	9	10	11	12	13	14
FILE "I"	U	Ø1 1A	Ø2 2A	Ø2 1B	SLOT EMPTY	SLOT EMPTY	Ø4 4A	SLOT EMPTY	SLOT EMPTY	SLOT EMPTY	SLOT EMPTY	SLOT EMPTY	Ø2 PED DC ISOLATOR	Ø6 PED DC ISOLATOR	FS DC ISOLATOR
	L	NOT USED	Ø2 2B	NOT USED			NOT USED						Ø4 PED DC ISOLATOR	Ø8 PED DC ISOLATOR	ST DC ISOLATOR
FILE "J"	U	Ø5 5A	Ø6 6A	Ø5 5B	SLOT EMPTY	SLOT EMPTY	Ø8 8A	SLOT EMPTY	SLOT EMPTY	SLOT EMPTY	SLOT EMPTY	SLOT EMPTY	SLOT EMPTY	SLOT EMPTY	SLOT EMPTY
	L	NOT USED	Ø6 6B	NOT USED			NOT USED								

EX.: 1A, 2A, ETC. = LOOP NO.'S

FS = FLASH SENSE
ST = STOP TIME

INPUT FILE CONNECTION & PROGRAMMING CHART

LOOP NO.	LOOP TERMINAL	INPUT FILE POS.	PIN NO.	DETECTOR NO.	NEMA PHASE	DELAY TIME	EXTEND (STRETCH) TIME
1A	TB2-1,2	I1U	56	1	1	5	
1B	TB2-9,10	I3U	63	5	1	15	
2A	TB2-5,6	I2U	39	3	2		
2B	TB2-7,8	I2L	43	4	2		
4A	TB4-9,10	I6U	41	11	4		
5A	TB3-1,2	J1U	55	19	5	5	
5B	TB3-9,10	J3U	64	23	5	15	
6A	TB3-5,6	J2U	40	21	6		
6B	TB3-7,8	J2L	44	22	6		
8A	TB5-9,10	J6U	42	31	8		
PED PUSH BUTTONS							
P21,P22	TB8-4,6	I12U	67	PED 2	2 PED		
P41,P42,PB43	TB8-5,6	I12L	69	PED 4	4 PED		
P61,P62	TB8-7,9	I13U	68	PED 6	6 PED		
P81,P82,PB83	TB8-8,9	I13L	70	PED 8	8 PED		

NOTE:
INSTALL DC ISOLATORS IN INPUT FILE SLOTS I12 AND I13.

INPUT FILE POSITION LEGEND: J2L
FILE J
SLOT 2
LOWER

FYA SIGNAL WIRING DETAIL

(wire signal heads as shown)

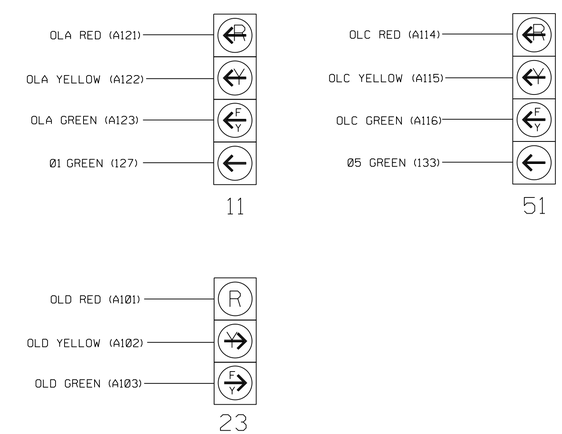

NOTE

1. See sheet 2 for Protected & Permissive Phases programming.

LOAD RESISTOR INSTALLATION DETAIL

(install resistors as shown below)

ACCEPTABLE VALUES

VALUE (ohms)	WATTAGE
1.5K - 1.9K	25W (min)
2.0K - 3.0K	10W (min)

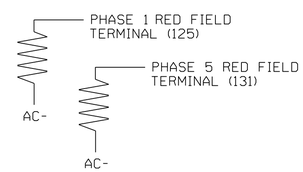

THIS ELECTRICAL DETAIL IS FOR
THE SIGNAL DESIGN: 05-2281
DESIGNED: Jan 2023
SEALED: 1/24/2023
REVISED:

AECOM
NC Firm License No.: F-0342
5438 Wade Park Boulevard
Suite 200 Raleigh, NC 27607
Phone: 919-461-1100

Electrical Detail - Sheet 1 of 3

DOCUMENT NOT CONSIDERED FINAL UNLESS ALL SIGNATURES COMPLETED

ELECTRICAL AND PROGRAMMING DETAILS FOR:

Prepared for the Offices of:
Traffic Engineering Mobility and Safety Division
STATE OF NORTH CAROLINA DEPARTMENT OF TRANSPORTATION
Traffic Signal Management Section
750 N.Greenfield Pkwy,Garner,NC 27529

US 401 (Louisburg Road) at Leland Drive

Division 5 | Wake County | Raleigh

PLAN DATE:	Jan 2023	REVIEWED BY:	H.M. Surti
PREPARED BY:	A. Ravipati	REVIEWED BY:	

REVISIONS	INIT.	DATE

SEAL
NORTH CAROLINA PROFESSIONAL SEAL 034481 ENGINEER HEMANG M. SURTI

DocuSigned by: Hemang M. Surti AF1DB8D67A5A41... 1/24/2023

SIG. INVENTORY NO. 05-2281

1/24/2023
pw:\\aecom-na-pw.bentley.com:AECOM_DS21_NA_2020\Documents\60609754-U-5748 Ligon Mill\#900-CAD GIS\910_CAD\70_NCDOT_TIP\Traffic\Signals\Design\Signals\Electrical Details_2022\05281_sm_ele_2022XXXX.dgn
michael.cavenaugh

DocuSign Envelope ID: EE0A9FB1-617B-4D0E-A869-87C1A84AA294

PROJECT REFERENCE NO.	SHEET NO.
U-5748	Sig. 18.2

FLASHING YELLOW ARROW OVERLAP AND PROTECTED/PERMISSIVE SEQUENCE PROGRAMMING FOR OVERLAPS A, C & D

1. From Main Menu select 4 - UNIT DATA
2. From UNIT DATA Submenu select 3 - OVERLAP DATA

Use Up/Dn/Left/Right keys to position cursor on the desired Overlap. Use the NEXT key to select the overlap type. Press the ENT key and then program as per the Overlap screen(s) shown.

```
OVERLAP DATA

   A: FYA   E: ---   I: ---   M: ---
   B: ---   F: ---   J: ---   N: ---
   C: FYA   G: ---   K: ---   O: ---
   D: FYA   H: ---   L: ---   P: ---

 PREV/NEXT TO CYCLE
```

OVERLAP A

Use Up/Dn/Left/Right keys to position cursor on Overlap 'A', use the NEXT key to select 'FYA', then press ENT

```
FYA OVERLAP - A          DELAY/10:   0
       PHASES..12345678 90123456
  PERM PHASES: 01000000 00000000
  PROT PHASES: 10000000 00000000
  -PED PHASES: 00000000 00000000
     OVERLAPS..ABCDEFGH IJKLMNOP
PERM OVERLAPS: x0000000 00000000
PROT OVERLAPS: x0000000 00000000
```

← NOTICE DELAY/10 = 0

← Notice PROT PHASE 1

Press ESC

OVERLAP C

Use Up/Dn/Left/Right keys to position cursor on Overlap 'C', use the NEXT key to select 'FYA', then press ENT

```
FYA OVERLAP - C          DELAY/10:   0
       PHASES..12345678 90123456
  PERM PHASES: 00000100 00000000
  PROT PHASES: 00001000 00000000
  -PED PHASES: 00000000 00000000
     OVERLAPS..ABCDEFGH IJKLMNOP
PERM OVERLAPS: 00x00000 00000000
PROT OVERLAPS: 00x00000 00000000
```

← NOTICE DELAY/10 = 0

← Notice PROT PHASE 5

Press ESC

OVERLAP D

Use Up/Dn/Left/Right keys to position cursor on Overlap 'D', use the NEXT key to select 'FYA', then press ENT

```
FYA OVERLAP - D          DELAY/10:   0
       PHASES..12345678 90123456
  PERM PHASES: 01000000 00000000
  PROT PHASES: 00100000 00000000
  -PED PHASES: 00000000 00000000
     OVERLAPS..ABCDEFGH IJKLMNOP
PERM OVERLAPS: 000x0000 00000000
PROT OVERLAPS: 000x0000 00000000
```

← NOTICE DELAY/10 = 0

← Notice PROT PHASE 3

END OVERLAP PROGRAMMING

INIT & N.A. RESP PROGRAMMING DETAIL

1. From Main Menu select 3 - PHASE DATA
2. From PHASE DATA Submenu select 4 - INIT & N.A RESP

```
PHASE......1...2...3...4...5...6...7...8
 INITIAL   1   4   0   1   1   4   0   1
 NA RESP   0   1   0   2   0   1   0   2

CODES.....0....1....2....3....4....5...6
 INITL  NONE INACT RED  YEL  GRN  DRK G/DW
 NA RSP NONE  NA1  NA2  1&2  ---  --- ---
                                       ***
```

INIT & N.A. RESP PROGRAMMING COMPLETE

COUNTDOWN PEDESTRIAN SIGNAL OPERATION

Countdown Ped Signals are required to display timing only during Ped Clearance Interval. Consult Ped Signal Module user's manual for instructions on selecting this feature.

THIS ELECTRICAL DETAIL IS FOR
THE SIGNAL DESIGN: 05-2281
DESIGNED: Jan 2023
SEALED: 1/24/2023
REVISED:

Electrical Detail - Sheet 2 of 3

DOCUMENT NOT CONSIDERED FINAL UNLESS ALL SIGNATURES COMPLETED

ELECTRICAL AND PROGRAMMING DETAILS FOR:

Prepared for the Offices of:

Division of Highways, Traffic Engineering & Signals Management Section

750 N.Greenfield Pkwy,Garner,NC 27529

AECOM
NC Firm License No.: F-0342
5438 Wade Park Boulevard
Suite 200 Raleigh, NC 27607
Phone: 919-461-1100

US 401 (Louisburg Road)
at
Leland Drive

Division 5 | Wake County | Raleigh

PLAN DATE:	Jan 2023	REVIEWED BY:	H.M. Surti
PREPARED BY:	A. Ravipati	REVIEWED BY:	

REVISIONS	INIT.	DATE

SEAL
NORTH CAROLINA PROFESSIONAL SEAL 034481 ENGINEER HEMANG M. SURTI

DocuSigned by: Hemang M. Surti 1/24/2023
AF1DB8D0A7A5481...

SIG. INVENTORY NO. 05-2281

1/24/2023
DgnPath=aecom-na-pw.bentley.com:AECOM_DS21_NA_2020\Documents\60609754-U-5748 Ligon Mill\900-CAD GIS\910_CAD\70_NCDOT_TIP\Traffic\Signals\Design\Signals\Electrical Details_2022\05281_sm_ele_2022XXXX.dgn
michael.cavanaugh

DocuSign Envelope ID: EE0A9FB1-617B-4D0E-A869-87C1A84AA294

PROJECT REFERENCE NO.	SHEET NO.
U-5748	Sig. 18.3

PROGRAMMING DETAILS TO RUN ALTERNATE PHASING

To run the Alternate Phasing, schedule a Day Plan that calls an Action that is programmed to enable Phase Function 1.

Actions can be programmed to run free run or call a coordination pattern.

PHASE FUNCTION MAPPING PROGRAMMING DETAIL

Step 1 - Assign OMIT OVERLAPS A & C to Phase Function 1.

1. From Main Menu select 6 - TIME BASE DATA
2. From TIME BASE DATA Submenu select 9 - PHS FUNC MAPPING

Use Up/Dn Keys to position cursor on NUM 1

```
TIME BASE PHS FUNC MAPING
                PHS FUNC SEL(0-OFF/1-ON)
NUM..P-FUNCT NAME.....123456789 0123456
  1  PHS-01 MAX # 2   000000000 0000000
  2  PHS-02 MAX # 2   000000000 0000000
  3  PHS-03 MAX # 2   000000000 0000000
  4  PHS-04 MAX # 2   000000000 0000000
A-UP B-DN C-LT D-RT E-ENTER F-PRIOR MENU
```

BEFORE PROCEEDING, SCROLL THRU ENTIRE RANGE OF FUNCTIONS TO ENSURE ALL P-FUNCT 1 NUM x VALUES ARE SET TO '0' (OFF)

Use Up/Dn/Left/Right keys to position cursor on NUM 145 and program P-FUNCT 1 as shown.

```
TIME BASE PHS FUNC MAPING
                PHS FUNC SEL(0-OFF/1-ON)
NUM..P-FUNCT NAME.....123456789 0123456
145  OVERLAP A OMIT   100000000 0000000
146  OVERLAP B OMIT   000000000 0000000
147  OVERLAP C OMIT   100000000 0000000
148  OVERLAP D OMIT   000000000 0000000
UP/DOWN TO SCROLL               E-EDIT
```

SET P-FUNCT 1 VALUE TO '1' (ON) AS SHOWN
← FOR OVERLAP A OMIT
← FOR OVERLAP C OMIT

PHASE FUNCTION PROGRAMMING COMPLETE

TIME BASE ACTIONS PROGRAMMING

Step 2 - Set up an Action to run Phase Function 1.

1. From Main Menu select 6 - TIME BASE DATA
2. From TIME BASE DATA Submenu select 5 - ACTIONS

```
TIME BASE ACTION # ***
                     12345678 90123456
  PATN:001       PHS: 10000000 00000000
   0=I'CONN      AUX: 000-----
  1-253=PATN     SPC: 0000000-      0=NO
  254=FREE       DIM: 0-------      1=YES
  255=FLASH      DET: 000-----
UP/DOWN TO SCROLL
```

← NOTICE PHS 1

SPECIAL FUNCTION PROGRAMMING COMPLETE

*** Action #(s) are to be determined by the Division and/or City Traffic Engineer and are scheduled to run in Day Plan(s).

THIS ELECTRICAL DETAIL IS FOR
THE SIGNAL DESIGN: 05-2281
DESIGNED: Jan 2023
SEALED: 1/24/2023
REVISED:

Electrical Detail - Sheet 3 of 3

DOCUMENT NOT CONSIDERED FINAL UNLESS ALL SIGNATURES COMPLETED

AECOM
NC Firm License No.: F-0342
5438 Wade Park Boulevard
Suite 200 Raleigh, NC 27607
Phone: 919-461-1100

ELECTRICAL AND PROGRAMMING DETAILS FOR:

Prepared for the Offices of:
Mobility and Safety Division
STATE OF NORTH CAROLINA DEPARTMENT OF TRANSPORTATION
ITS & Signals Management Section
750 N.Greenfield Pkwy,Garner,NC 27529

US 401 (Louisburg Road) at Leland Drive

Division 5 | Wake County | Raleigh

PLAN DATE:	Jan 2023	REVIEWED BY:	H.M. Surti
PREPARED BY:	A. Ravipati	REVIEWED BY:	

REVISIONS	INIT.	DATE

SEAL
NORTH CAROLINA PROFESSIONAL SEAL 034481 ENGINEER HEMANG M. SURTI

DocuSigned by: Hemang M. Surti AF1D8B0A7A5A41 1/24/2023

SIG. INVENTORY NO. 05-2281

1/24/2023
DWG=\\aecom-na-pw.bentley.com:AECOM_DS21_NA_2020\Documents\60609754-U-5748 Ligon Mill\900-CAD GIS\910_CAD\70_NCDOT_TIP\Traffic\Signals\Design\Signals\Electrical Details_2022\05281_sm_ele_2022XXXX.dgn
michael.cavanaugh

DocuSign Envelope ID: EE0A9FB1-617B-4D0E-A869-87C1A84AA294

NCDOT METAL POLE STANDARDS

PROJECT I.D. NO.	SHEET NO.
U-5748	Sig.M1

STATE OF NORTH CAROLINA
DIVISION OF HIGHWAYS

STANDARD DRAWINGS FOR ALL METAL POLES

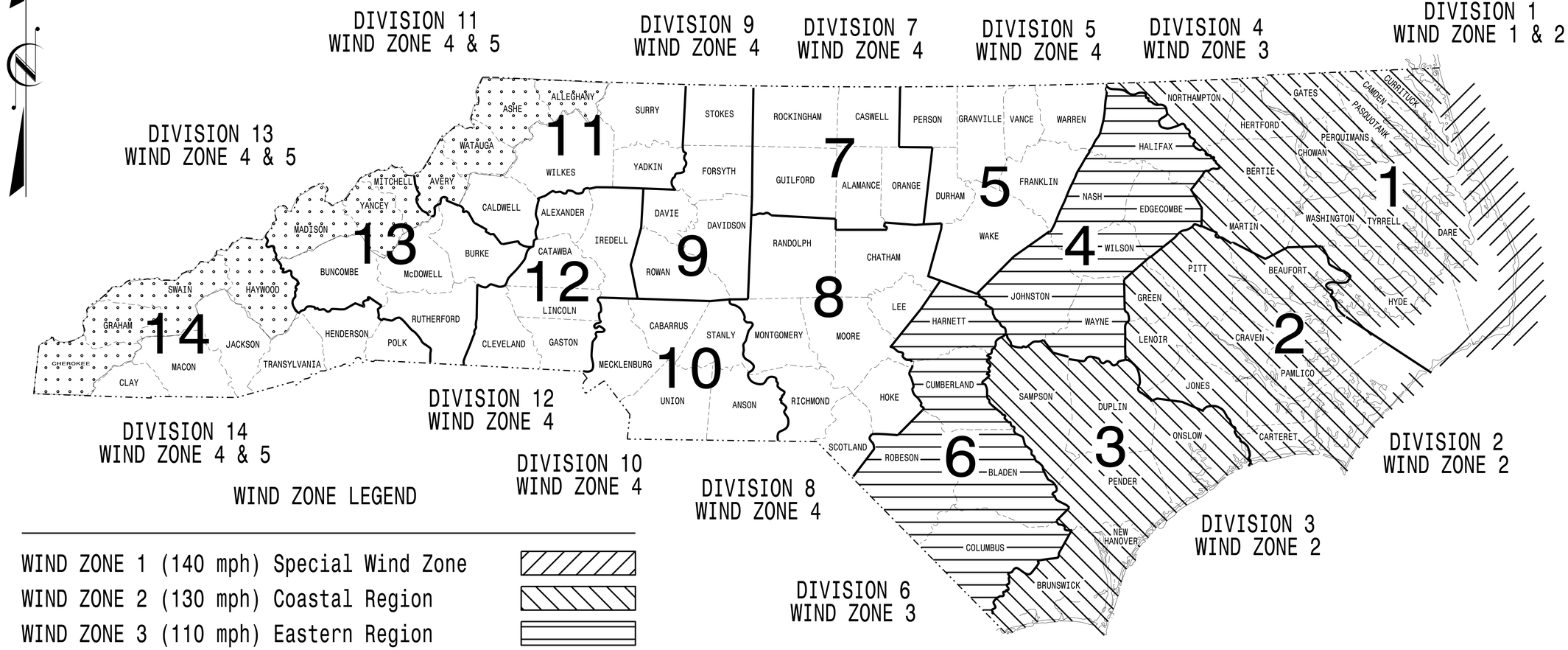

WIND ZONE LEGEND

WIND ZONE 1 (140 mph) Special Wind Zone	
WIND ZONE 2 (130 mph) Coastal Region	
WIND ZONE 3 (110 mph) Eastern Region	
WIND ZONE 4 (90 mph) Central & Mtn. Region	
WIND ZONE 5 (120 mph) Special Wind Zone	

https://connect.ncdot.gov/resources/safety/Pages/ITS-Design-Resources.aspx

Prepared in the Offices of:
Transportation Mobility and Safety Division
Signal Design Section
750 N.Greenfield Pkwy.
Garner,NC 27529

Designed in conformance with the latest 2015 Interim to the 6th Edition 2013

AASHTO

Standard Specifications for Structural Supports for Highway Signs, Luminaires, and Traffic Signals

INDEX OF PLANS

DRAWING NUMBER	DESCRIPTION
Sig. M 1	Statewide Wind Zone Map
Sig. M 2	Typical Fabrication Details–All Metal Poles
Sig. M 3	Typical Fabrication Details–Strain Poles
Sig. M 4	Typical Fabrication Details–Mast Arm Poles
Sig. M 5	Typical Fabrication Details–Mast Arm Connection
Sig. M 6	Typical Fabrication Details–Strain Pole Attachments
Sig. M 7	Construction Details–Foundations
Sig. M 8	Standard Strain Pole Foundation–All Soil Conditions

NCDOT CONTACTS:

MOBILITY AND SAFETY DIVISION – ITS AND SIGNALS UNIT

M.M. MCDIARMID, P.E. – STATE ITS AND SIGNALS ENGINEER

J. P. GALLOWAY, P.E. – STATE SIGNALS ENGINEER

D.C. SARKAR, P.E. – ITS AND SIGNALS SENIOR STRUCTURAL ENGINEER

SEAL

NORTH CAROLINA PROFESSIONAL SEAL 028094 ENGINEER DEBESH C. SARKAR

DocuSigned by: Debesh C. Sarkar 44EBE3C3... SIGNATURE

10/11/2017 DATE

DocuSign Envelope ID: EE0A9FB1-617B-4D0E-A869-87C1A84AA294

PROJECT ID. NO.	SHEET NO.
U-5748	Sig.M2

Fabrication Details – All Metal Poles

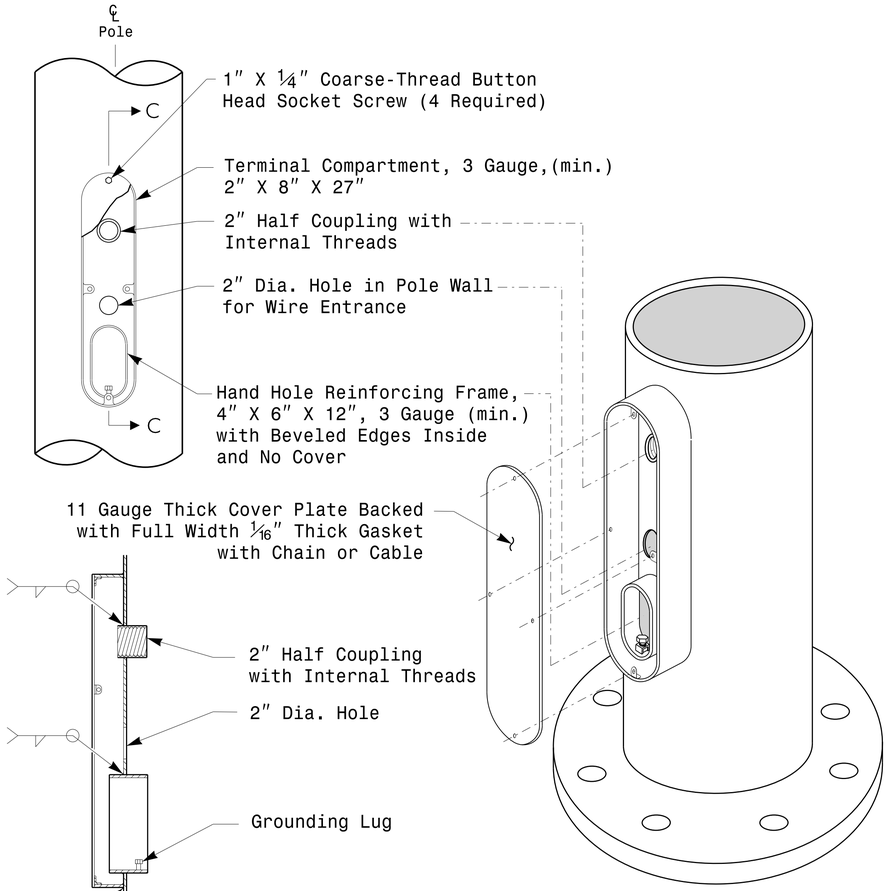

Section C-C

Note: Unless otherwise specified, locate Terminal Compartment 1 foot above the pole base plate at 180 degrees on the pole's radial index.

Terminal Compartment Detail

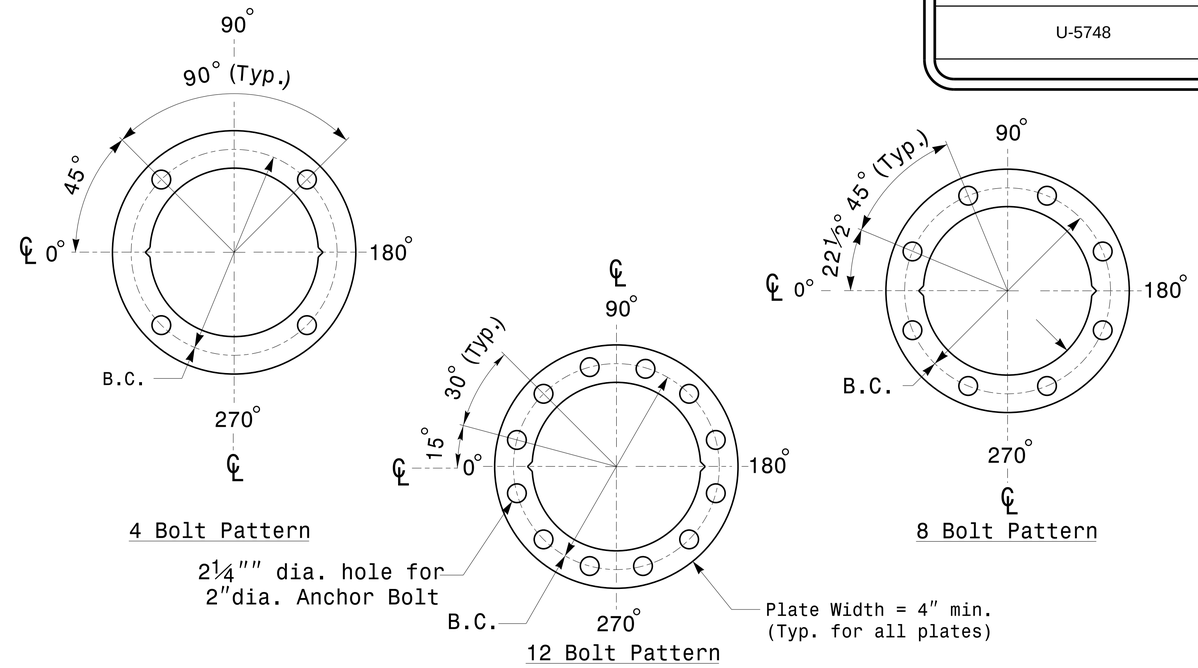

Construct Templates and Plates from ¼″ min. thick Steel. Galvanizing is not required.

Base Plate Template and Anchor Bolt Lock Plate Details

MFG _____ MFG. DATE: MM/YY
SHAFT D/T/L/Y ----/----/----/----
ARM-A D/T/L/Y ----/----/----/----
----/----/----/----
ARM-B D/T/L/Y ----/----/----/----
----/----/----/----
A.B. DIA./B.C./L/Y ----/----/----/----
NCDOT SIG. INV. NO. _____
NCDOT POLE NO. _____

Shaft I.D. Tag
(Provide on Shaft of Strain Poles and Mast Arm Poles Shaft)

MFG _____ MFG. DATE: MM/YY
SECTION D/T/L/Y ----/----/----/----
NCDOT SIG. INV. NO. _____
NCDOT POLE NO. _____

Arm I.D. Tag
(Provide on each section of a multi-section mast arm.)

Notes:
1) D= Diameter, T= Thickness, L= Length, Y= Yield Strength
2) A.B. = Anchor Bolt
3) B.C. = Bolt Circle of Anchor Bolts
4) If Custom Design, use "NCDOT STANDARD" line for Signal Inv. Number and pole I.D. number
5) See drawing M3 and M4 for mounting positions of I.D. tags.

Identification Tag Details

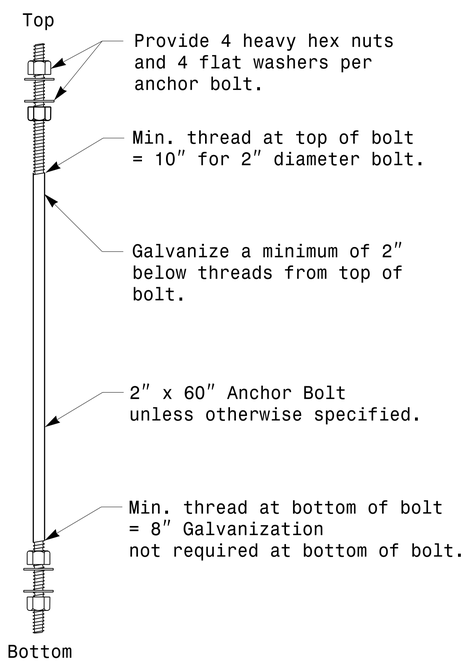

Anchor Bolt Detail

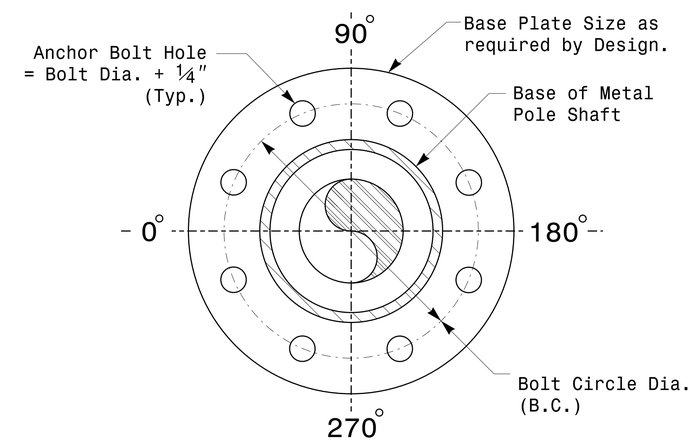

Note: Base plate may be circular,octagonal,square or rectangular in shape.

Typical Base Plate Detail

Prepared in the Offices of:
Transportation Mobility and Safety Division
Signal Design Section
750 N.Greenfield Pkwy,Garner,NC 27529

SCALE 0 NA NONE

Typical Fabrication Details For All Metal Poles

PLAN DATE:	OCTOBER 2017	DESIGNED BY:	C.F.ANDREWS
PREPARED BY:	N. BITTING	REVIEWED BY:	D.C. SARKAR

REVISIONS	INIT.	DATE

SEAL
NORTH CAROLINA PROFESSIONAL SEAL 028094 ENGINEER DEBESH C. SARKAR

DocuSigned by: Debesh C. Sarkar 44EBE32D9A4... SIGNATURE 10/11/2017 DATE

11-OCT-2017 08:30
S:\MTS&SU\TS Signals\Signal Design Section\Eastern Region\M Sheets\2016\2014 Sig.M2 Std. Fabrication Details-All Poles..dgn
rzalfman

DocuSign Envelope ID: EE0A9FB1-617B-4D0E-A869-87C1A84AA294

PROJECT ID. NO.	SHEET NO.
U-5748	Sig.M3

Fabrication Details – Strain Poles

Note:
1. Opening in pole base plate shall be equal to pole base inside diameter minus 3½" but shall not be less than 8½".

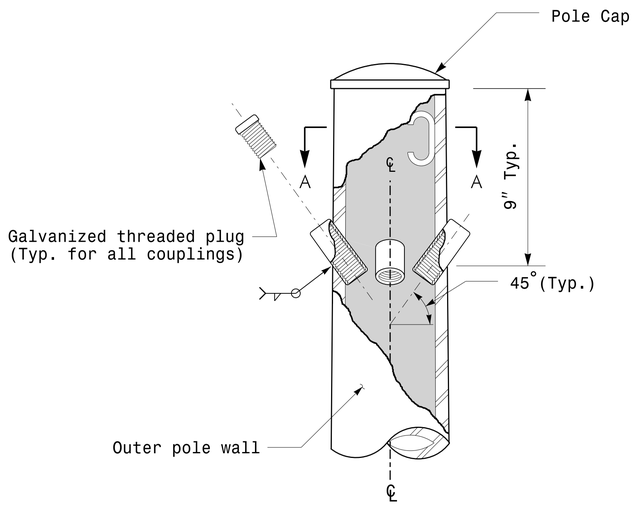

Cable Entrances at Top of Pole

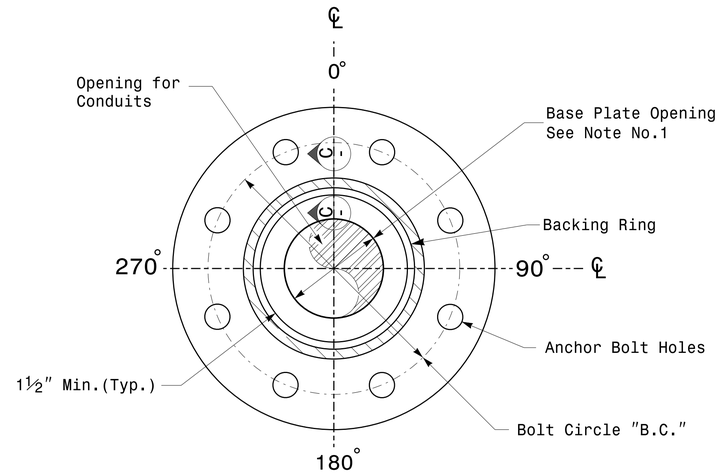

Section B-B

Pole Base Plate Details
(8 and 12 Bolt Pattern)

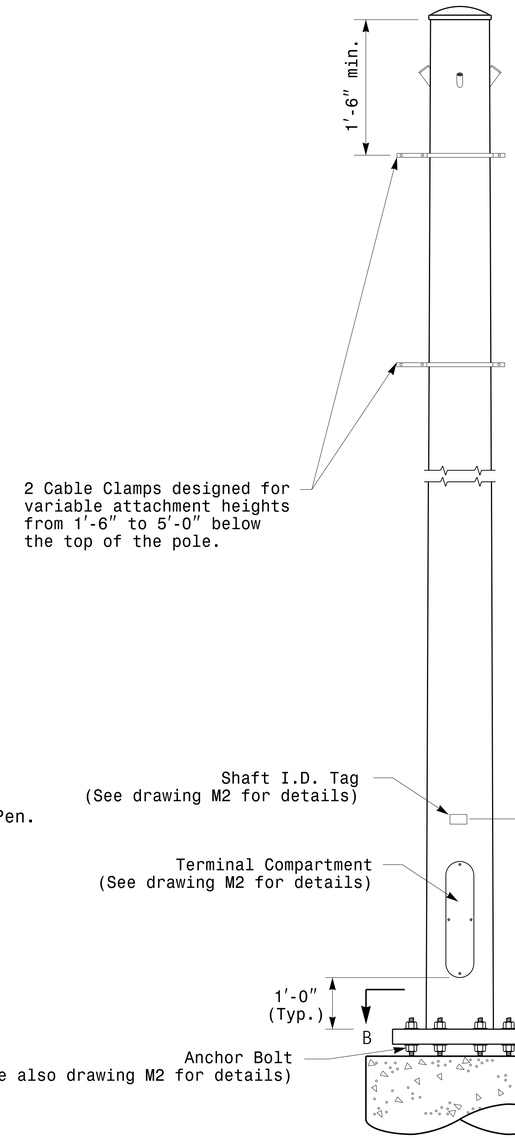

Monotube Strain Pole

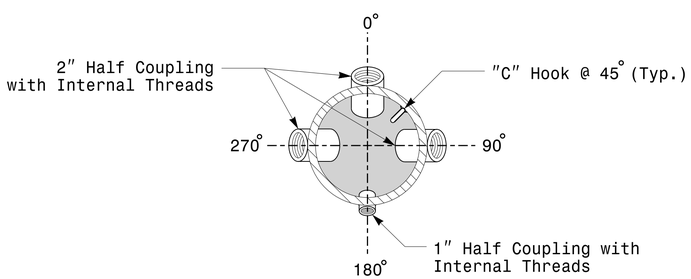

Section A-A

Radial Orientation for Factory Installed
Accessories at Top of Pole

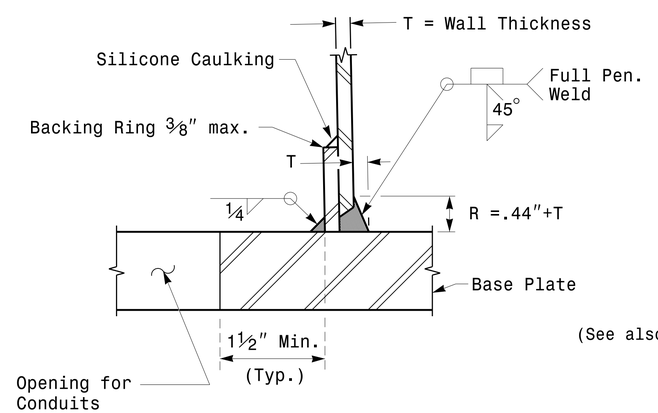

Section C-C
(Pole Attachment to Base Plate)

Full-Penetration
Groove Weld Detail

Prepared in the Offices of:
Transportation Mobility and Safety Division
Traffic Engineering Branch
Signal Design Section
750 N.Greenfield Pkwy,Garner,NC 27529

SCALE
0 NA
NONE

Typical Fabrication Details
For
Strain Poles

PLAN DATE:	OCTOBER 2017	DESIGNED BY:	K.C.DURIGON
PREPARED BY:	N. BITTING	REVIEWED BY:	D.C. SARKAR

REVISIONS	INIT.	DATE

SEAL
NORTH CAROLINA PROFESSIONAL SEAL 028094 ENGINEER DEBESH C. SARKAR

DocuSigned by:
Debesh C. Sarkar
44BE8E3D0A7C4B0...
SIGNATURE

10/11/2017
DATE

11-OCT-2017 08:25
S:\TSS&SW\ITS Signals\Signal Design Section\Eastern Region\M Sheets\2016\2014 Sig.M3 Std. Fabrication Details-Strain Poles.dgn
rnatisgr

DocuSign Envelope ID: EE0A9FB1-617B-4D0E-A869-87C1A84AA294

PROJECT ID. NO.	SHEET NO.
U-5748	Sig.M4

Note:
1. Opening in pole base plate shall be equal to pole base inside diameter minus 3½″ but shall not be less than 8½″.

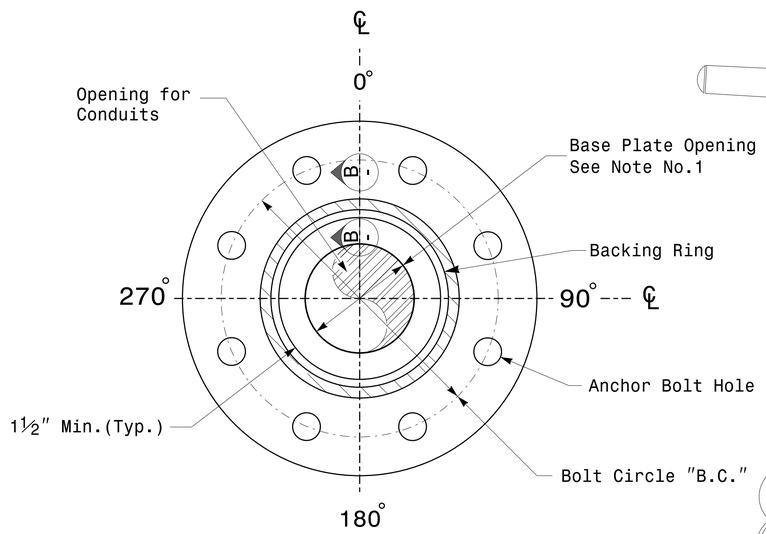

Section A-A

Pole Base Plate Details

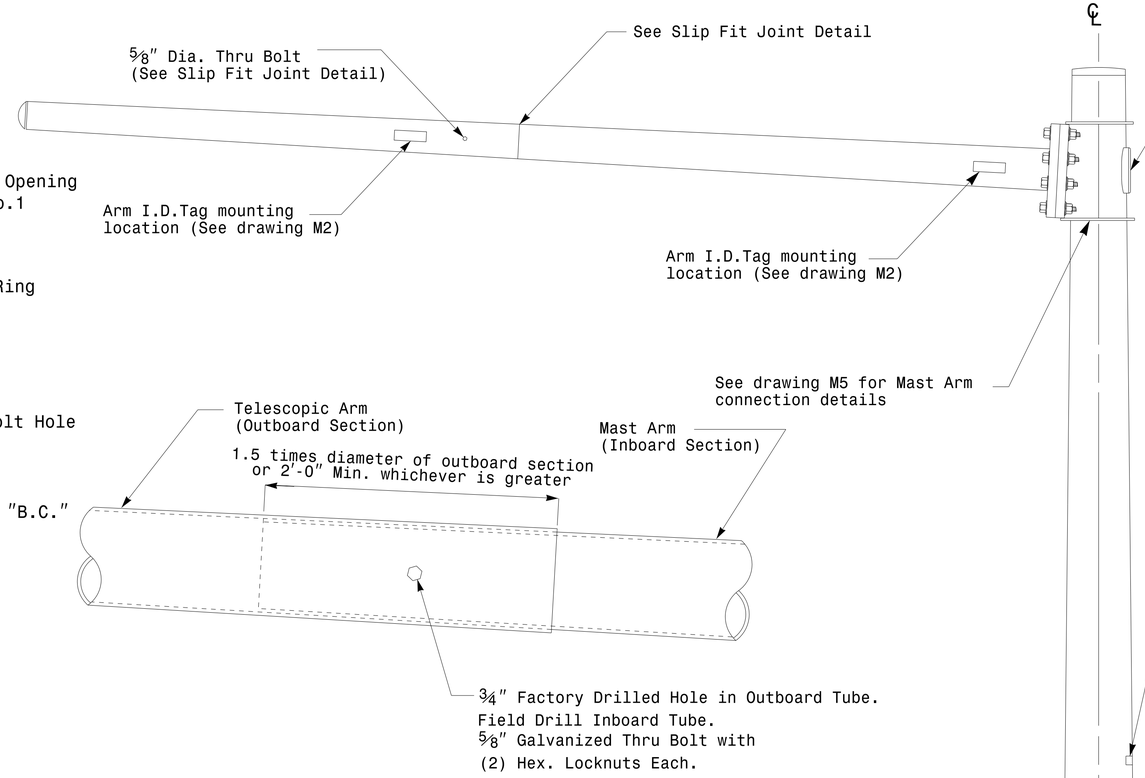

Slip Fit Joint Detail for Mast Arm

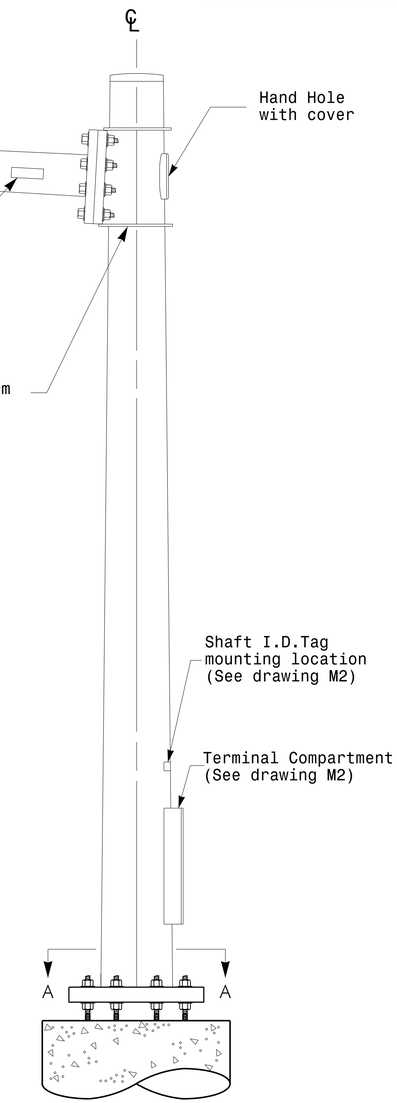

Mast Arm Pole

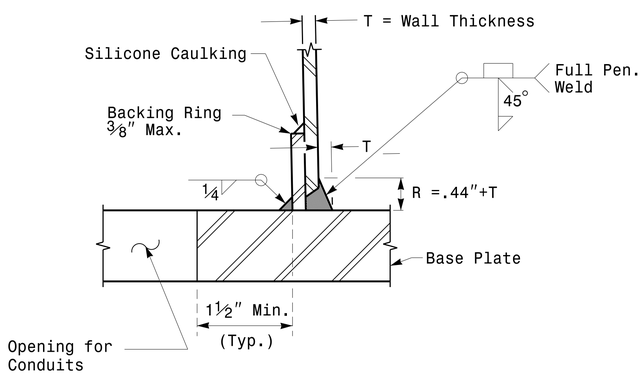

Section B-B
(Pole Attachment to Base Plate)

Full-Penetration Groove Weld Detail

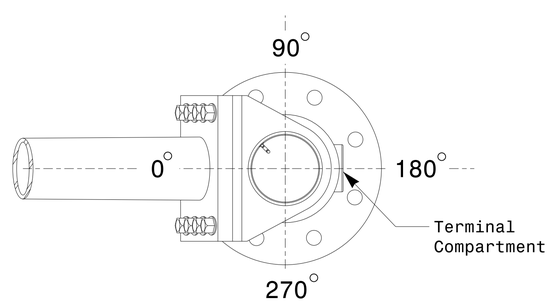

Mast Arm Radial Orientation

Fabrication Details – Mast Arm Poles

Prepared in the Offices of:
Transportation Mobility and Safety Division
Signal Design Section
750 N.Greenfield Pkwy,Garner,NC 27529

SCALE
0 NA
NONE

Typical Fabrication Details
For
Mast Arm Poles

PLAN DATE:	OCTOBER 2017	DESIGNED BY:	K.C.DURIGON
PREPARED BY:	N. BITTING	REVIEWED BY:	D.C. SARKAR

REVISIONS	INIT.	DATE

SEAL
NORTH CAROLINA PROFESSIONAL SEAL 028094 ENGINEER DEBESH C. SARKAR

DocuSigned by: Debesh C. Sarkar
SIGNATURE
10/11/2017
DATE

11-OCT-2017 08:33
S:\TSAS\ITS Signals\Signal Design Section\Eastern Region\M Sheets\2016\2014 Sig.M4 Std. Fabrication Details-Mast Arm Poles.dgn
rsitnsor

DocuSign Envelope ID: EE0A9FB1-617B-4D0E-A869-87C1A84AA294

Welded Ring Stiffened Mast Arm Connection

PROJECT ID. NO.	SHEET NO.
U-5748	Sig.M5

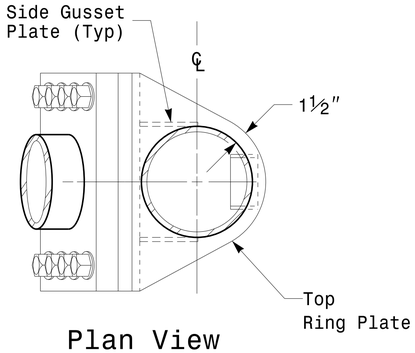

Plan View

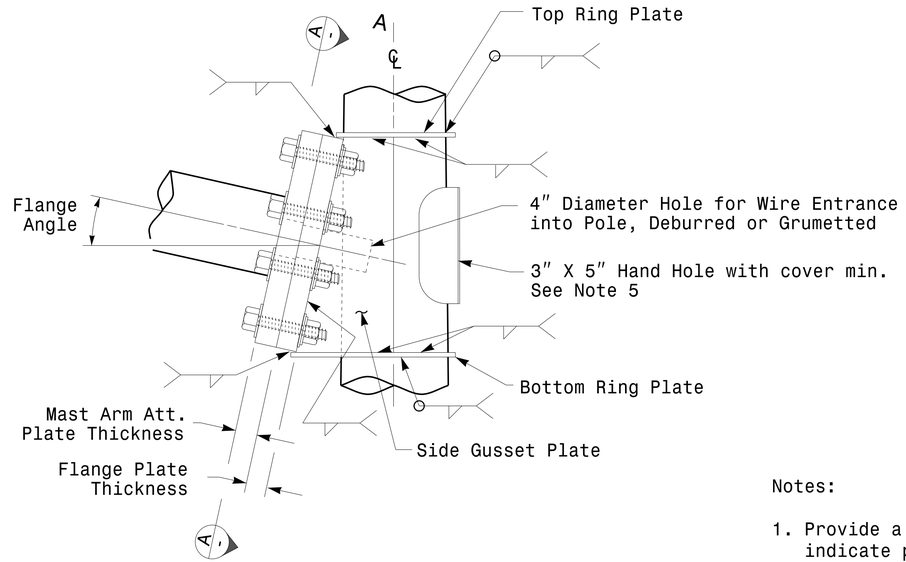

Side Elevation View

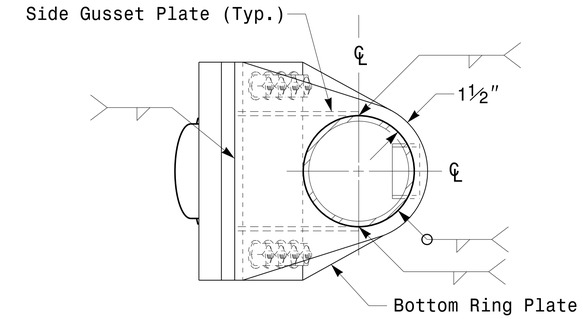

Bottom View

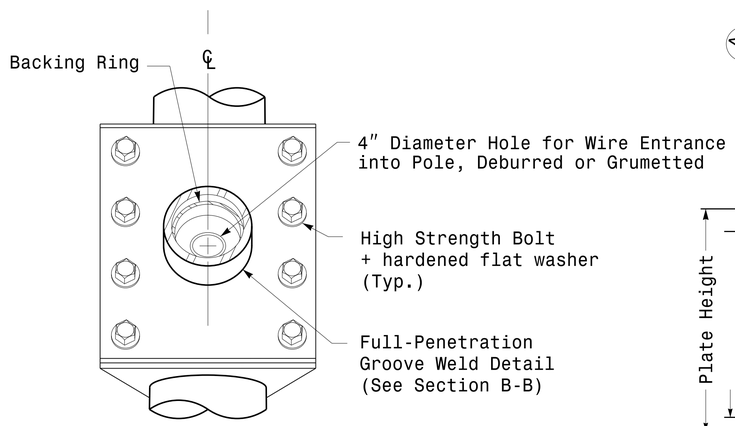

Front Elevation View

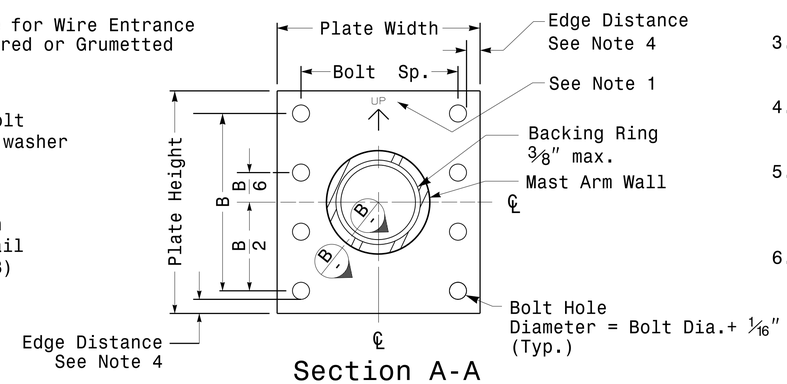

Section A-A
Mast Arm Attachment Plate

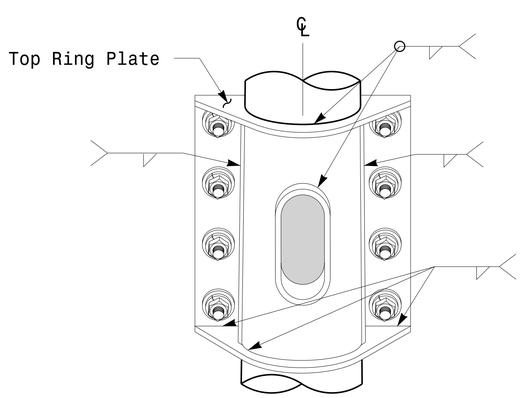

Back Elevation View

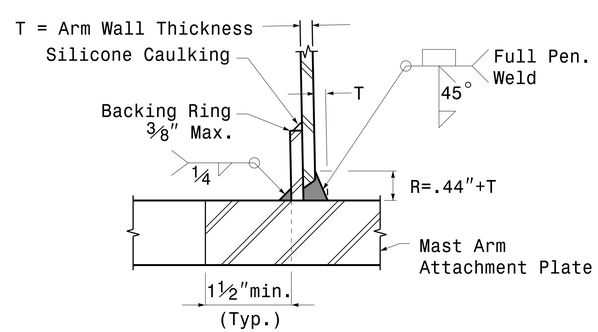

Section B-B
Full-Penetration Groove Weld Detail

Notes:

1. Provide a permanent means of identification above the mast arm to indicate proper attachment orientation of the mast arm.
2. Designer will determine the size of all structural components, plates, fasteners, and welds shown unless they are already specified.
3. Fabricator is responsible for providing appropriate holes at drainage points to drain galvanizing materials.
4. For minimum edge distance follow AISC Table J3.4 and J3.5. For nominal bolt hole size use Table J3.3.
5. Provide upper handhole as necessary when shaft extensions are reguired for luminaire arms or camera. For poles without luminaires/camera, wiring can be done through the top of pole.
6. Allowable range of flange tilt angle will vary from 0° to as required.

Fabrication Details – Mast Arm Connection

Prepared in the Offices of:
Transportation Mobility and Safety Division
Signal Design Section
750 N.Greenfield Pkwy,Garner,NC 27529

SCALE
0 NA
NONE

Typical Fabrication Details
For
Mast Arm Connection To Pole

PLAN DATE:	OCTOBER 2017	DESIGNED BY:	C.F.ANDREWS
PREPARED BY:	N. BITTING	REVIEWED BY:	D.C. SARKAR

REVISIONS	INIT.	DATE

SEAL
NORTH CAROLINA PROFESSIONAL SEAL 028094 ENGINEER DEBESH C. SARKAR

DocuSigned by: Debesh C. Sarkar
44EBE3E3...
SIGNATURE

10/11/2017
DATE

11-OCT-2017 08:35
S:\MTS&SU\MTS Signals\Signal Design Section\Eastern Region\M Sheets\2016\2014 Sig.M5 Std. Connection Fabrication Details-Mast Arm Poles.dgn
rsullivan

DocuSign Envelope ID: EE0A9FB1-617B-4D0E-A869-87C1A84AA294

PROJECT ID. NO.	SHEET NO.
U-5748	Sig.M6

Fabrication Details – Strain Pole Attachments

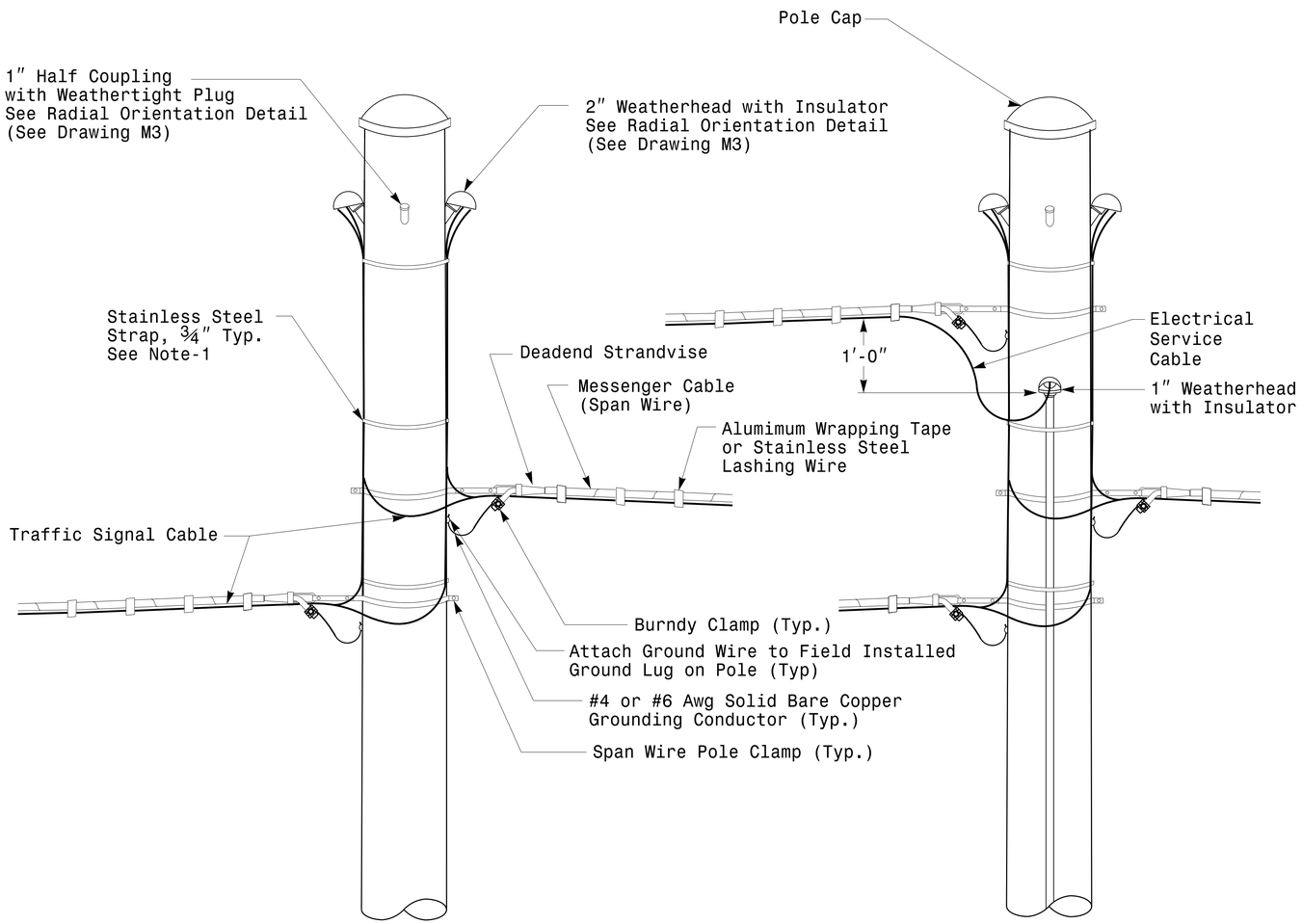

Strain Pole Attachments

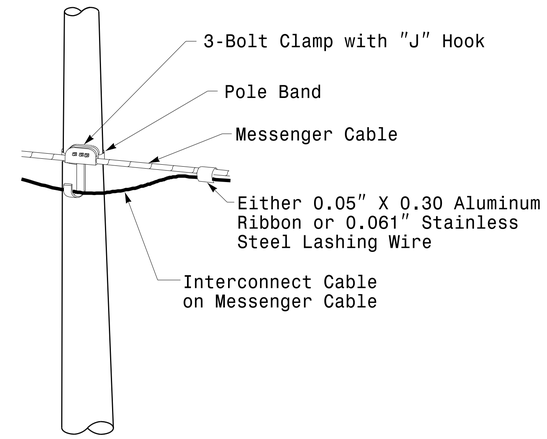

Attachment of Cable to Intermediate Metal Pole

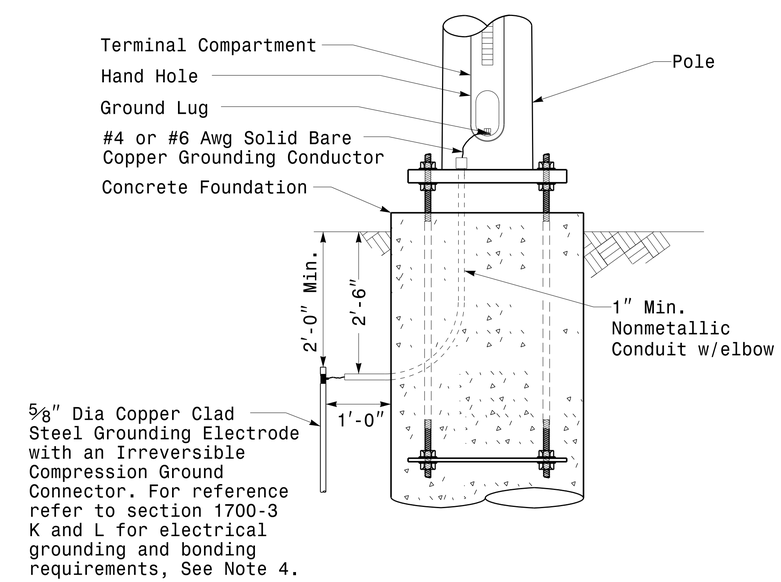

Metal Pole Grounding Detail For Strain Pole and Mast Arm

NOTE:

1. Strap all signal cables to the side of the pole with ¾″ stainless steel straps when the distance between the spanwire attachment clamp and the weatherheads exceeds 3′-0″.
2. Provide minimum two spanwire pole clamps per pole.
3. It is prohibited to attach two span wires at one pole clamp.
4. For general requirements refer to NCDOT Standard Specifications for Roadway and Structures, January 2018.

Prepared in the Offices of:
Transportation Mobility and Safety Division
Signal Design Section
750 N.Greenfield Pkwy.Garner.NC 27529

SCALE
0 NA
NONE

Typical Fabrication Details
For
Strain Pole Attachments

PLAN DATE:	OCTOBER 2017	DESIGNED BY:	C.F.ANDREWS
PREPARED BY:	N. BITTING	REVIEWED BY:	D.C. SARKAR

REVISIONS	INIT.	DATE

SEAL
NORTH CAROLINA PROFESSIONAL SEAL 028094 ENGINEER DEBESH C. SARKAR

DocuSigned by: Debesh C. Sarkar
SIGNATURE
10/11/2017
DATE

11-OCT-2017 08:36
S:\TTSASU\TS Signals\Signal Design Section\Eastern Region\MS Sheets\2016\2014 Sig.M6 Std. Fabrication Details-Strain Poles.dgn
rmitscher

DocuSign Envelope ID: EE0A9FB1-617B-4D0E-A869-87C1A84AA294

PROJECT ID. NO.	SHEET NO.
U-5748	Sig.M7

Construction Details – Foundations

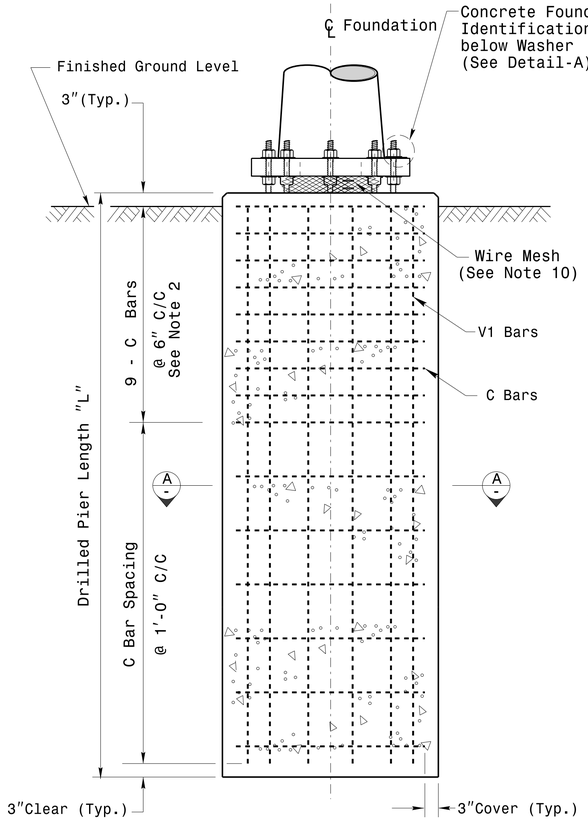

Concrete Shaft Elevation

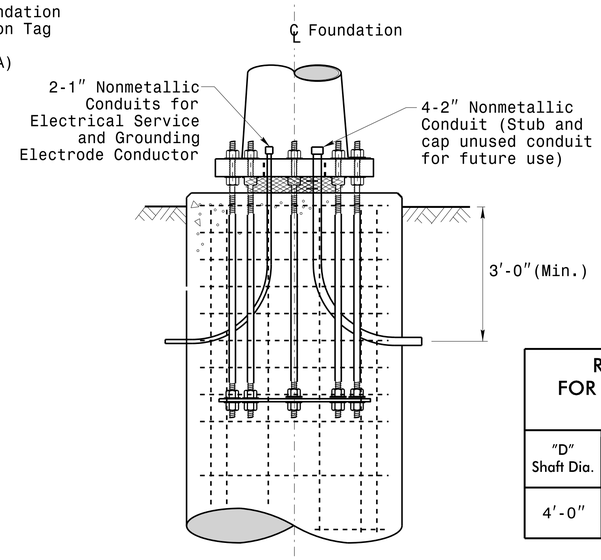

Typical Foundation Conduit Details

REINFORCING STEEL TABLE FOR STANDARD DRILL PIER SHAFT (4'–0" DIAMETER)						
"D" Shaft Dia.	Conc. Volume (cu. yds.)	Bar Name	MIN.	Size	Type	Length
4'-0"	.465 x L	V1	—	#8	STR.	**
		C	*	#4	CIR.	12'-6"

* See Note No. 2
** See Note No. 3

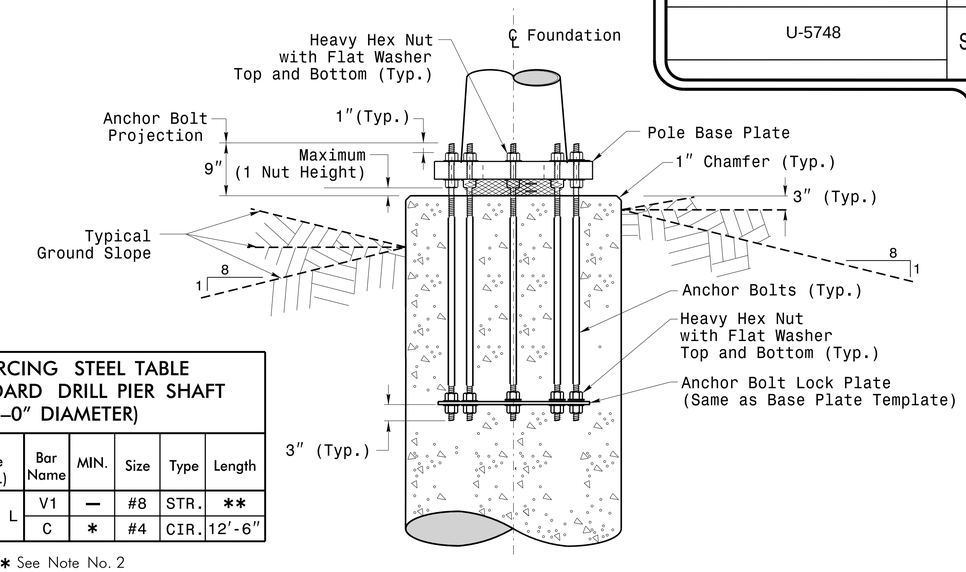

Typical Foundation Anchor Bolt Details

(Reinforcing Cage Not Shown for Clarity)

General Notes:

1. If actual subsurface conditions differ significantly from boring data contact the Engineer before excavating or placing concrete.
2. Circular tie reinforcing rings may be vertically adjusted by +/-3" at a depth between 2'-0" and 3'-0" to facilitate the installation of electrical conduit entering in the cage.
3. For standard foundations, see sheet Sig. M8 for details. Vertical reinforcing bars (V1) may be horizontally adjusted by +/-3" to facilitate the installation of electrical conduit entering into the cage.
4. Provide 2" to 5" foundation projection above ground level depending on the ground slope.
5. Unless otherwise shown, foundation designs are based on non-sloping level ground surfaces with slope ratios of 8:1 (H:V) or flatter. If actual ground line slopes are steeper contact the Engineer before excavating or placing concrete.
6. Construct foundations in accordance with NCDOT Standard Provisions SP09 R005- Foundations and Anchor Rod Assemblies for Metal Poles. All applicable 2018 NCDOT Standard Specifications are referenced in this provision. Refer to the NCDOT Resources/Specifications page located on the Connect NCDOT website.

   https://connect.ncdot.gov/resources/Specifications and Special Provisions.aspx
7. Use air entrained AA concrete mix with a compression strength of f'c=4500 psi.(min.) after 28 days.
8. Use ASTM A615 grade 60 deformed bars for all reinforcing steel. Maintain at least 3" cover on all reinforcement.
9. Locate the Identification Tag on the top of the base plate, directly above the conduit's entry point.
10. Provide two layers of galvanized welded 23 gauge (0.25) 6" wide 4 mesh wire around pipes under the base plate and secure it with ties if necessary.
11. Preferred location for the I.D. Tag is as shown in Detail-A; directly above the conduit entering the foundation.

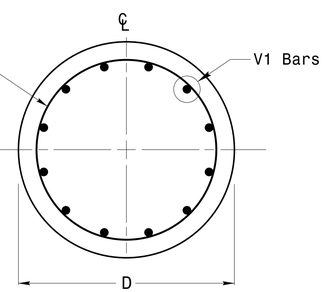

Section A-A

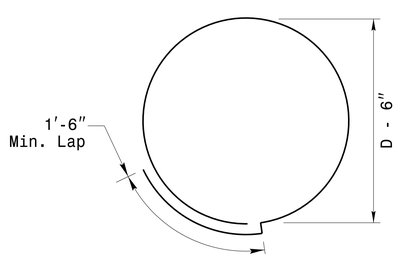

Typical "C" Bar Detail

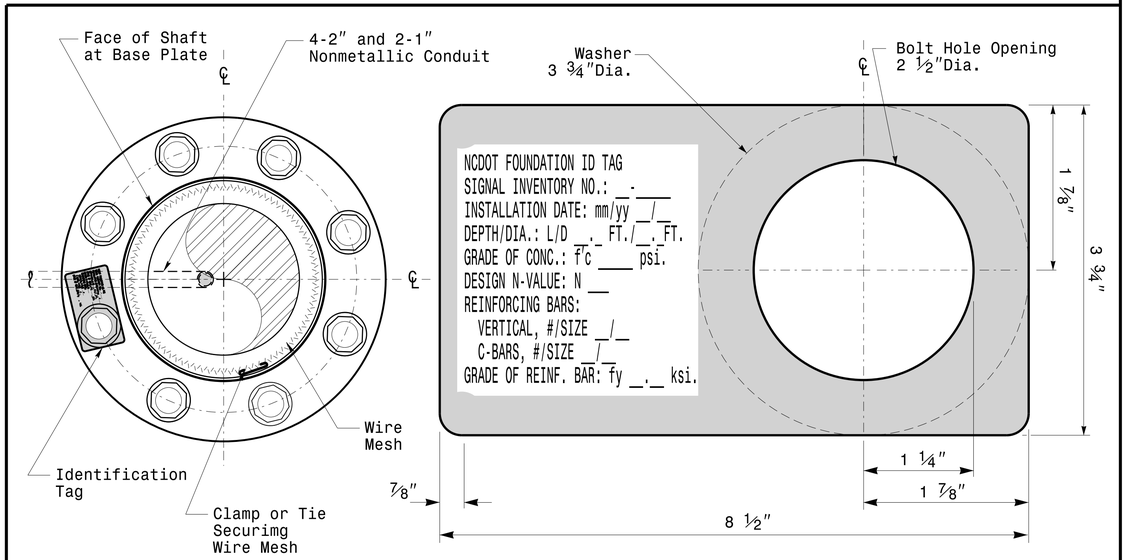

D = Diameter
L = Length/Depth
mm = Month
yy = Year

Detail-A

Concrete Foundation Identification Tag Details

Prepared in the Offices of:
Transportation Mobility and Safety Division
Signal Design Section
750 N.Greenfield Pkwy.Garner,NC 27529

SCALE: 0 NA — NONE

Construction Details For Foundations

PLAN DATE:	OCTOBER 2018	DESIGNED BY:	C.B.COGDELL
PREPARED BY:	N. BITTING	REVIEWED BY:	D.C. SARKAR

REV. NO.	COMMENTS	INIT.	DATE
1	Revised Foundation Tag Details	N.B.	5/11/2015

SEAL: NORTH CAROLINA PROFESSIONAL SEAL 028094 ENGINEER DEBESH C. SARKAR

DocuSigned by: Debesh C. Sarkar — 4AEBE3D5... SIGNATURE — 10/11/2017 DATE

11-OCT-2017 08:37
S:\TTS&SU\TTS Signals\Signal Design Section\Eastern Region\M Sheets\2016\2014 Sig.M7 Std. Construction Details-Strain Poles.dgn
rsallsbur

DocuSign Envelope ID: EE0A9FB1-617B-4D0E-A869-87C1A84AA294

PROJECT ID. NO.	SHEET NO.
U-5748	Sig.M8

SOIL CONDITION

		STANDARD STRAIN POLES						STANDARD FOUNDATIONS 48″ Diameter Drilled Pier Length (L) – Feet							Reinforcement			
					Reactions at the Pole Base			Clay				Sand			Longitudinal		Stirrups	
		Case No.	Pole Height (Ft.)	Base Plate BC (In.)	Axial (kip)	Shear (kip)	Moment (ft–kip)	Medium N–Value 4–8	Stiff N–Value 9–15	Very Stiff N–Value 16–30	Hard N–Value >30	Loose N–Value 4–10	Medium N–Value 11–30	Dense N–Value >30	Bar Size (#)	Quantity (ea.)	Bar Size (#)	Spacing (in.)
WIND ZONE 1	LIGHT	S26L3	26	25	2	11	270	19	13	10	8	17	14.5	12.5	8	12	4	12
		S30L3	30	25	2	11	300	19.5	13.5	10	8	17.5	15	13	8	14	4	12
		S35L3	35	25	3	11	320	20	13.5	10.5	8	17.5	15	13	8	14	4	12
	HEAVY	S30H3	30	29	3	16	450	24.5	16	12	9	21	17.5	15	8	16	4	6
		S35H3	35	29	4	16	515	26	17	12.5	9.5	22	18.5	16	8	16	4	6
WIND ZONE 2	LIGHT	S26L2	26	23	2	10	245	18	12.5	9.5	8	16.5	14	12	8	12	4	12
		S30L2	30	23	2	10	270	18.5	12.5	10	8	16.5	14	12.5	8	12	4	12
		S35L2	35	23	3	10	300	19.5	13	10	8	17	14.5	13	8	12	4	12
	HEAVY	S30H2	30	29	3	15	415	23	15.5	11.5	9	20	17	14.5	8	16	4	6
		S35H2	35	29	4	15	475	25	16.5	12	9.5	21	17.5	15.5	8	16	4	6
WIND ZONE 3	LIGHT	S26L2	26	23	2	10	245	18	12.5	9.5	8	16.5	14	12	8	12	4	12
		S30L2	30	23	2	10	270	18.5	12.5	10	8	16.5	14	12.5	8	12	4	12
		S35L2	35	23	3	10	300	19.5	13	10	8	17	14.5	13	8	12	4	12
	HEAVY	S30H2	30	29	3	15	415	23	15.5	11.5	9	20	17	14.5	8	16	4	6
		S35H2	35	29	4	15	475	25	16.5	12	9.5	21	17.5	15.5	8	16	4	6
WIND ZONE 4	LIGHT	S26L1	26	22	2	8	190	16	11.5	8.5	8	15	12.5	11	8	12	4	12
		S30L1	30	22	2	8	205	16.5	11.5	9	8	15	13	11.5	8	12	4	12
		S35L1	35	22	3	8	230	17	12	9	8	15.5	13.5	11.5	8	12	4	12
	HEAVY	S30H1	30	25	3	12	320	20.5	13.5	10.5	8	18	15	13.5	8	16	4	6
		S35H1	35	25	4	12	350	21	14	10.5	8.5	18.5	15.5	13.5	8	16	4	6
WIND ZONE 5	LIGHT	S26L2	26	23	2	10	245	18	12.5	9.5	8	16.5	14	12	8	12	4	12
		S30L2	30	23	2	10	270	18.5	12.5	10	8	16.5	14	12.5	8	12	4	12
		S35L2	35	23	3	10	300	19.5	13	10	8	17	14.5	13	8	12	4	12
	HEAVY	S30H2	30	29	3	15	415	23	15.5	11.5	9	20	17	14.5	8	16	4	6
		S35H2	35	29	4	15	475	25	16.5	12	9.5	21	17.5	15.5	8	16	4	6

48″ Dia. Foundations Concrete Volume (cubic yards) = (0.465) x Drilled Pier Length

General Notes:

1. Values shown in the "Reactions at the Pole Base" column represent the minimum acceptable capacity allowed for design using a design CSR of 1.00.
2. Use chairs and spacers to maintain proper clearance.
3. For foundation, always use air-entrain concrete mix.

Foundation Selection:

1. Perform a standard penetration test at each proposed foundation site to determine "N" value.
2. Select the appropriate wind zone from M 1 drawing.
3. Select the soil type (Clay or Sand) that best describes the soil characteristics.
4. Get the appropriate standard pole case number from the plans or from the Engineer.
5. Select the appropriate column under "Standard Foundations" based on soil type and "N" value. Select the appropriate row based on the pole load case.
6. The foundation depth is the value shown in the "Standard Foundations" category where the column and the row intersect.
7. Use Construction Procedures and Design Methods prescribed by FHWA-NHI-10-016 for Reference Drilled Shafts.

Standard Strain Pole Foundation–All Soil Condition

Prepared in the Offices of: Transportation Mobility and Safety Division, Signal Design Section
750 N.Greenfield Pkwy,Garner,NC 27529

SCALE: 0 NA — NONE

Standard Strain Pole Foundation for All Soil Conditions

PLAN DATE:	OCTOBER 2017	DESIGNED BY:	C.B. COGDELL
PREPARED BY:	N. BITTING	REVIEWED BY:	D.C. SARKAR

REVISIONS	INIT.	DATE
Changed "Foundation Depth" to "Drilled Pier Length" in Conc. Eqn.	N.B.	7/12/2015

SEAL

NORTH CAROLINA PROFESSIONAL SEAL 028094 ENGINEER DEBESH C. SARKAR

DocuSigned by: Debesh C. Sarkar — 10/11/2017

AGENCY SIGNATURE — DATE

11-OCT-2017 08:40
S:\TS&SU\TS Signals\Signal Design Section\Eastern Region\M Sheets\2016\2014 Sig.M8 Std. Strain Pole Found.-Saturated Soil Condition.dgn
rrazinger

DocuSign Envelope ID: F926F7D5-49D8-4E25-B498-6D3DA1783FA9

PROJECT REFERENCE NO.	SHEET NO.
U-5748	SCP 1

1. INSTALL COAX CABLE
2. INSTALL ETHERNET CABLE
3. EXISTING ETHERNET (OR COAX) CABLE
4. INSTALL SMFO CABLE
5. EXISTING SMFO CABLE
6. INSTALL FIBER OPTIC DROP CABLE
7. INSTALL TRACER WIRE
8. TRENCH
9. INSTALL PVC CONDUIT
10. INSTALL RIGID, GALVANIZED STEEL CONDUIT
11. INSTALL RIGID, GALVANIZED STEEL RISER WITH WEATHERHEAD
12. INSTALL RIGID, GALVANIZED STEEL RISER WITH FIBER OPTIC CABLE SEAL
13. INSTALL OUTER–DUCT POLYETHYLENE CONDUIT
14. INSTALL POLYETHYLENE CONDUIT
15. DIRECTIONAL DRILL CONDUIT
16. BORE AND JACK CONDUIT
17. INSTALL CABLE(S) IN EXISTING CONDUIT
18. INSTALL CABLE(S) IN NEW CONDUIT
19. INSTALL CABLE(S) IN EXISTING RISER
20. INSTALL CABLE(S) IN NEW RISER
21. INSTALL CABLE(S) IN EXISTING CONDUIT STUB–OUTS
22. INSTALL NEW CONDUIT INTO EXISTING CABINET BASE (USE EXISTING CONDUIT STUB–OUTS WHEN AVAILABLE)
23. INSTALL NEW RISER INTO EXISTING CABINET BASE (USE EXISTING CONDUIT STUB–OUTS WHEN AVAILABLE)
24. INSTALL NEW CONDUIT INTO EXISTING POLE MOUNTED CABINET
25. INSTALL NEW RISER INTO EXISTING POLE MOUNTED CABINET
26. INSTALL NEW ETHERNET EDGE SWITCH
27. INSTALL NEW FIBER OPTIC TRANSCEIVER
28. INSTALL INTERCONNECT CENTER, PATCH PANEL, JUMPERS AND FUSION SPLICE CABLE IN CABINET
29. INSTALL UNDERGROUND SPLICE ENCLOSURE
30. INSTALL AERIAL SPLICE ENCLOSURE
31. MODIFY EXISTING INTERCONNECT CENTER /SPLICE ENCLOSURE
32. INSTALL POLE MOUNTED SPLICE CABINET
33. INSTALL BASE MOUNTED SPLICE CABINET
34. INSTALL CABINET FOUNDATION
35. INSTALL CCTV CAMERA POLE MOUNTED CABINET
36. INSTALL CCTV CAMERA ASSEMBLY
37. INSTALL CCTV CAMERA WOOD POLE
38. INSTALL CCTV CAMERA METAL POLE AND FOUNDATION
39. INSTALL JUNCTION BOX
40A. INSTALL OVERSIZED JUNCTION BOX
40B. INSTALL SPECIAL OVERSIZED JUNCTION BOX (36″ x 24″ x 24″)
41. REMOVE EXISTING JUNCTION BOX
42. INSTALL WOOD POLE
43. REMOVE EXISTING WOOD POLE
44. INSTALL AERIAL GUY ASSEMBLY
45. INSTALL STANDARD GUY ASSEMBLY
46. INSTALL SIDEWALK GUY ASSEMBLY
47. INSTALL MESSENGER CABLE
48A. REMOVE EXISTING COMMUNICATIONS AND MESSENGER CABLE
48B. REMOVE EXISTING COMMUNICATIONS CABLE
49. BACK PULL EXISTING COMMUNICATIONS CABLE
50. INSTALL CELL MODEM AND ANTENNA
51. INSTALL CABLE STORAGE RACKS (SNOW SHOES) AND STORE 100 FEET OF CABLE
52. INSTALL DELINEATOR MARKER
53A. STORE 30 FEET OF COMMUNICATIONS CABLE
53B. STORE 50 FEET OF EACH COMMUNICATIONS CABLE
54. LASH CABLE(S) TO EXISTING COMMUNICATIONS CABLE
55. LASH CABLE(S) TO EXISTING MESSENGER CABLE
56. LASH CABLE(S) TO NEW MESSENGER CABLE
57. MODIFY EXISTING ELECTRICAL SERVICE
58. INSTALL NEW ELECTRICAL SERVICE
59. INSTALL NEW EQUIPMENT CABINET DISCONNECT
60. BOND TRACER WIRE TO EQUIPMENT GROUND BUS
61. DO NOT BOND TRACER WIRE TO EQUIPMENT GROUND BUS
62. BOND RISER AND MESSENGER CABLE TO POLE GROUND
63. BOND RISER TO POLE GROUND
64. BOND MESSENGER CABLE TO POLE GROUND
65. INSTALL HEAT SHRINK TUBING RETROFIT KIT
66. INSTALL MOLDABLE DUCT SEAL
67. SLACK SPAN
68. CITY OF RALEIGH COR DELINEATOR MARKER

LEGEND

- FO — NEW FIBER OPTIC COMMUNICATIONS CABLE
- TWIST PR — NEW TWISTED PAIR COMMUNICATIONS CABLE
- EXI — EXISTING COMMUNICATIONS CABLE
- REM — EXISTING COMMUNICATIONS CABLE TO BE REMOVED
- NEW AERIAL GUY ASSEMBLY
- NEW CONDUIT
- EXISTING CONDUIT
- DD — NEW DIRECTIONAL DRILLED CONDUIT
- B&J — NEW BORED AND JACKED CONDUIT
- NEW JUNCTION BOX
- EXISTING JUNCTION BOX
- CITY OF RALEIGH COR NEW JUNCTION BOX
- CITY OF RALEIGH COR EXISTING JUNCTION BOX
- NEW WOOD POLE
- EXISTING WOOD POLE
- AERIAL SPLICE ENCLOSURE
- EXISTING AERIAL SPLICE ENCLOSURE
- UNDERGROUND SPLICE ENCLOSURE
- NEW METAL POLE
- EXISTING METAL POLE
- NEW CCTV ASSEMBLY
- EXISTING CCTV ASSEMBLY
- CITY OF RALEIGH COR IT CABLE STORAGE RACK
- CITY OF RALEIGH COR IT EXISTING CABLE STORAGE RACK
- NEW STANDARD GUY ASSEMBLY
- NEW SIDEWALK GUY ASSEMBLY
- NEW CABLE STORAGE RACKS (SNOW SHOES)
- EXISTING CABLE STORAGE RACK (SNOW SHOE)
- EXISTING CONTROLLER AND CABINET
- NEW CCTV CABINET
- SP — SIGNAL POLE
- FLAT PANEL ANTENNA (SINGLE)
- YAGI ANTENNA (DOUBLE) FOR REPEATER OPERATION
- YAGI ANTENNA (SINGLE)
- OMNI ANTENNA
- CITY OF RALEIGH COR AERIAL SPLICE ENCLOSURE
- CITY OF RALEIGH COR EXISTING AERIAL SPLICE ENCLOSURE
- XX–XXXX — SIGNAL INVENTORY NUMBER

CONSTRUCTION NOTE SYMBOLOGY KEY

- XX — INDICATES NUMBER OF CABLES, LOOPS, ETC.
- XX — INDICATES NUMBER OF FIBERS PER CABLE, TWISTED PAIRS PER CABLE, ETC.
- XX — INDICATES NUMBER OF RISER(S)/CONDUIT(S)
- XX — INDICATES DIAMETER OF RISER(S)/CONDUIT(S) (INCH)

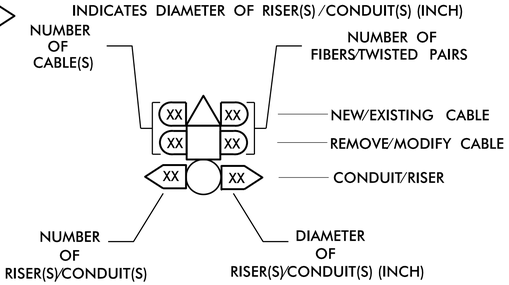

"SS" REFERENCE LOCATION
FS = FRONT SIDE OF POLE
BS = BACK SIDE OF POLE

ATTACHMENT POINT:

- XX″/SS / YYY — DISTANCE ABOVE (IN)/ATTACHMENT POINT REFERENCE POINT
- YYY / XX″/SS — REFERENCE POINT DISTANCE BELOW (IN)/ATTACHMENT POINT

DOCUMENT NOT CONSIDERED FINAL UNLESS ALL SIGNATURES COMPLETED

AECOM
NC Firm License No.: F-0342
5438 Wade Park Boulevard
Suite 200 Raleigh, NC 27607
Phone: 919-461-1100

Prepared for the Offices of:
Transportation Mobility and Safety Division
STATE OF NORTH CAROLINA DEPARTMENT OF TRANSPORTATION
Traffic Engineering Branch
750 N. Greenfield Pkwy., Garner, NC 27529

Construction Notes

Division 5 Wake County Raleigh

PLAN DATE:	Jan 2023	REVIEWED BY:	A. Ravipati
PREPARED BY:	M.P. Cavenaugh	REVIEWED BY:	H.M. Surti

REVISIONS	INIT.	DATE

SEAL
NORTH CAROLINA PROFESSIONAL SEAL 034481 ENGINEER HEMANG M. SURTI

DocuSigned by: Hemang M. Surti AF12B8053A5481... 1/24/2023

1/24/2023
pw:\\aecom-na-pw.bentley.com:AECOM_DS21_NA_2020\Documents\60609754-U-5748 Ligon Mill\900-CAD GIS\910_CAD\70_NCDOT_TIP\Traffic\Signals\Designs\Signals\2 - Signal Comm_Post Let_2022\U-5748_scp_psh_01_PDS1.dgn
TindalM

DocuSign Envelope ID: F926F7D5-49D8-4E25-B498-6D3DA1783FA9

PROJECT REFERENCE NO.	SHEET NO.
U-5748	SCP 2

NOTES:

1. ALL CABLE ATTACHMENT POINTS ARE 12 INCHES BELOW CHARTER, FRONT SIDE OF POLE, UNLESS OTHERWISE NOTED.

2. NOTIFY THE RALEIGH SIGNAL SYSTEM OFFICE, CHRIS JEFFERSON, AT (919) 996–4064, SEVEN (7) DAYS PRIOR TO BEGINNING WORK ON COMMUNICATIONS CABLE FOR SIGNAL COMMUNICATIONS. CUTOVER TO THE NEW FIBER SHALL NOT EXCEED 24 HOURS IN DURATION. (SEE "ICT"). NOTIFY THE RALEIGH ENGINEER AFTER ALL WORK IS PERFORMED. ALL WORK IS NOT COMPLETE UNTIL THE SIGNAL SYSTEM IS OPERATIONAL.

3. CONTRACTOR TO RECORD EXISTING SPLICE ARRANGEMENT FOR COMPARISON TO THE SUPPLIED SPLICE PLANS. IF DISCREPANCIES EXIST, CONTACT THE ENGINEER TO DETERMINE HOW TO PROCEED WITH RESPLICING. PROVIDE AS–BUILT PLANS TO THE ENGINEER IF FINAL SPLICE ARRANGMENT DIFFERS FROM THE SUPPLIED SPLICE PLANS.

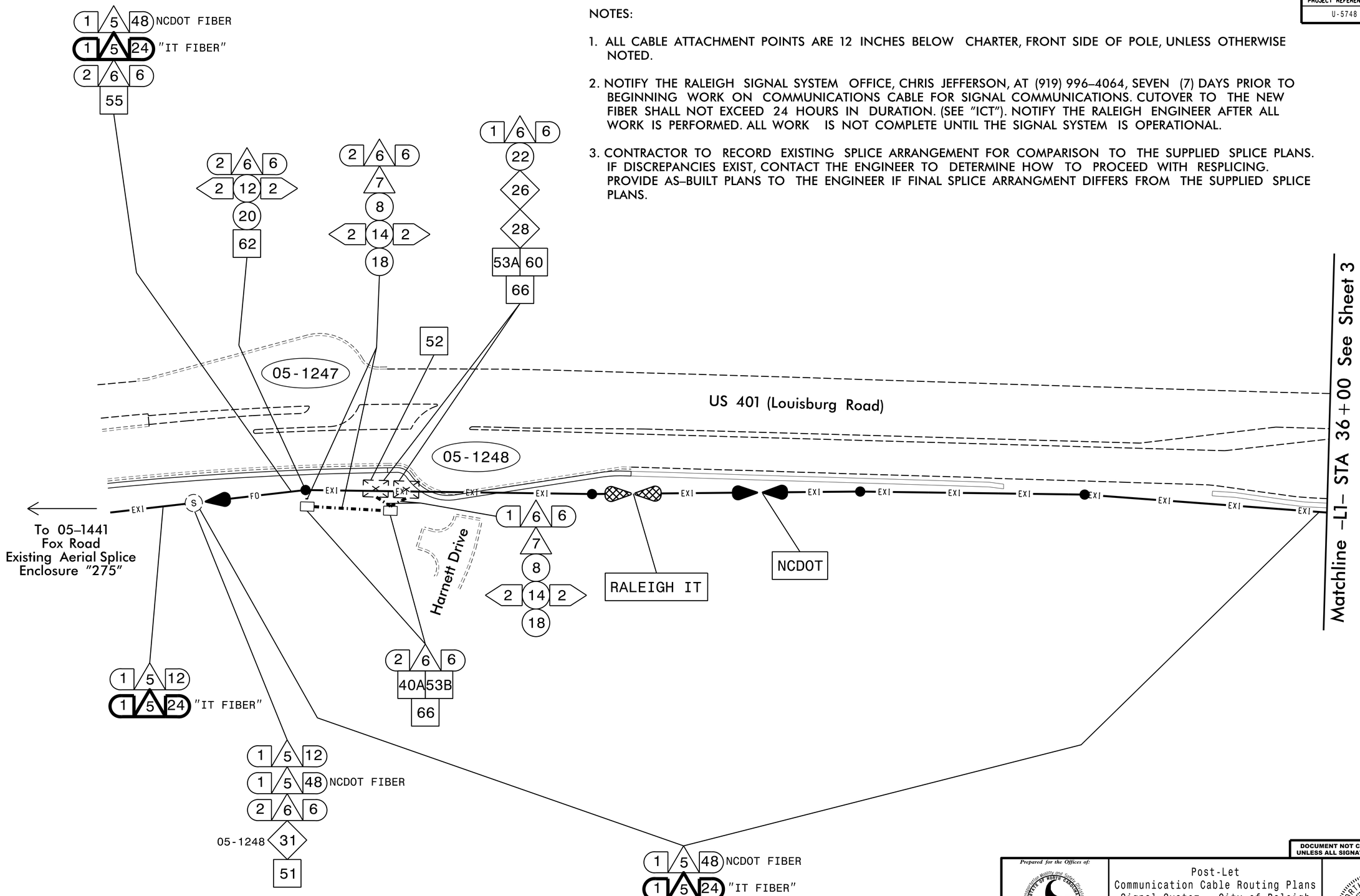

DOCUMENT NOT CONSIDERED FINAL UNLESS ALL SIGNATURES COMPLETED

AECOM
NC Firm License No.: F-0342
5438 Wade Park Boulevard
Suite 200 Raleigh, NC 27607
Phone: 919-461-1100

Prepared for the Offices of:
Transportation Mobility and Safety Division
Intelligent Transportation Systems Section
750 N. Greenfield Pkwy., Garner, NC 27529

SCALE 0 50 1"=50'

Post-Let
Communication Cable Routing Plans
Signal System - City of Raleigh

Division 5 Wake County Raleigh

PLAN DATE:	Jan 2023	REVIEWED BY:	A. Ravipati
PREPARED BY:	M.P. Cavenaugh	REVIEWED BY:	H.W. Surti

REVISIONS	INIT.	DATE

SEAL
NORTH CAROLINA PROFESSIONAL SEAL 034481 ENGINEER HEMANG M. SURTI

DocuSigned by: Hemang M. Surti 1/24/2023

CADD Filename:

1/24/2023
pw://aecom-na-pw.bentley.com:AECOM_DS21_NA_2020\Documents\60609754-U-5748 Ligon Mill\900-CAD GIS\910_CAD\70_NCDOT_TIP\Traffic\Signals\Design\Signals\2 - Signal Comm_Post Let_2022\U-5748_scp_psh_02_POS1.dgn
Tindalm

DocuSign Envelope ID: F926F7D5-49D8-4E25-B498-6D3DA1783FA9

PROJECT REFERENCE NO.	SHEET NO.
U-5748	SCP 3

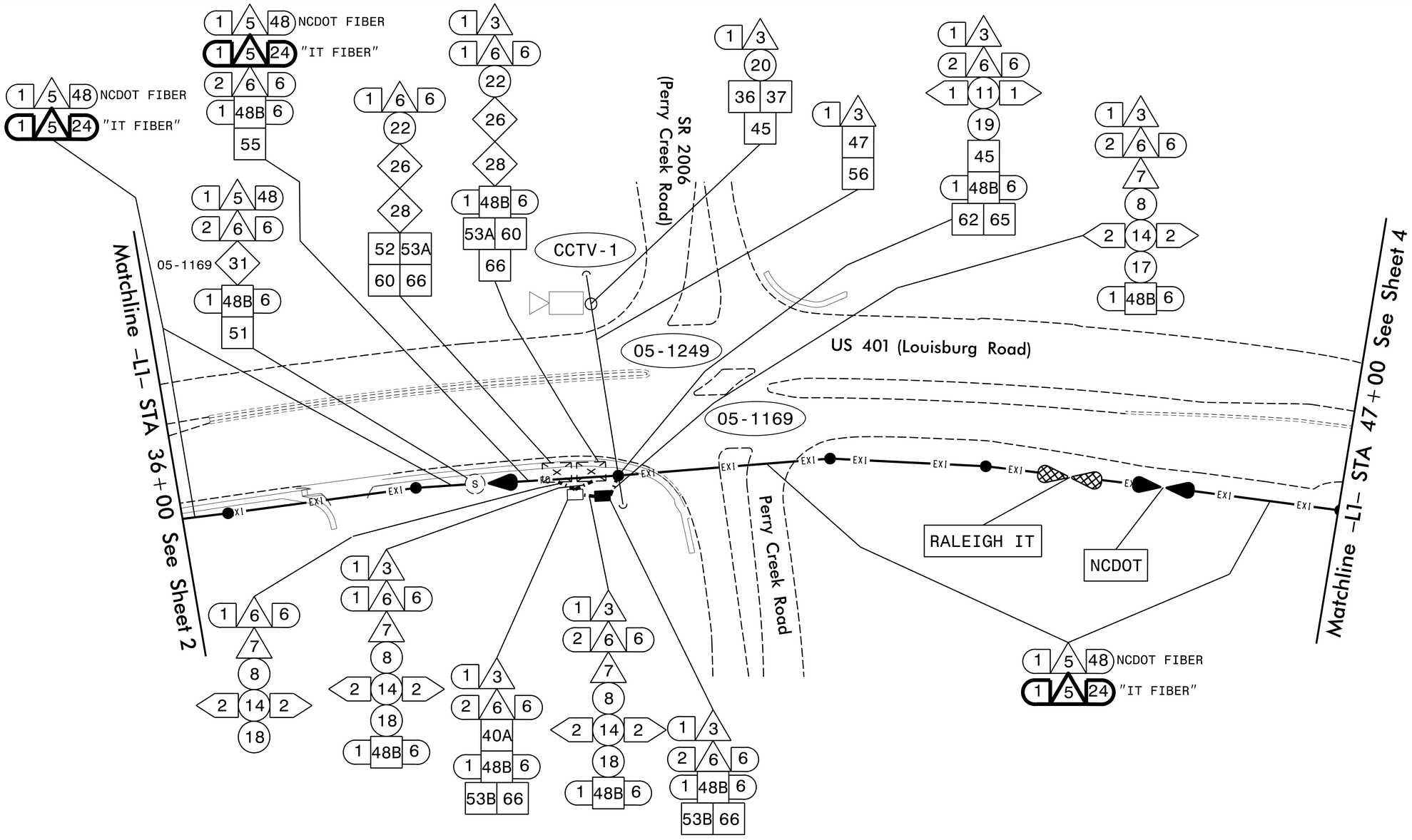

NOTES:

1. ALL CABLE ATTACHMENT POINTS ARE 12 INCHES BELOW CHARTER, FRONT SIDE OF POLE, UNLESS OTHERWISE NOTED.

2. NOTIFY THE RALEIGH SIGNAL SYSTEM OFFICE, CHRIS JEFFERSON, AT (919) 996–4064, SEVEN (7) DAYS PRIOR TO BEGINNING WORK ON COMMUNICATIONS CABLE FOR SIGNAL COMMUNICATIONS. CUTOVER TO THE NEW FIBER SHALL NOT EXCEED 24 HOURS IN DURATION. (SEE "ICT"). NOTIFY THE RALEIGH ENGINEER AFTER ALL WORK IS PERFORMED. ALL WORK IS NOT COMPLETE UNTIL THE SIGNAL SYSTEM IS OPERATIONAL.

3. CONTRACTOR TO RECORD EXISTING SPLICE ARRANGEMENT FOR COMPARISON TO THE SUPPLIED SPLICE PLANS. IF DISCREPANCIES EXIST, CONTACT THE ENGINEER TO DETERMINE HOW TO PROCEED WITH RESPLICING. PROVIDE AS–BUILT PLANS TO THE ENGINEER IF FINAL SPLICE ARRANGMENT DIFFERS FROM THE SUPPLIED SPLICE PLANS.

AECOM
NC Firm License No.: F-0342
5438 Wade Park Boulevard
Suite 200 Raleigh, NC 27607
Phone: 919-461-1100

DOCUMENT NOT CONSIDERED FINAL UNLESS ALL SIGNATURES COMPLETED

Prepared for the Offices of:
750 N. Greenfield Pkwy., Garner, NC 27529

Post-Let
Communication Cable Routing Plans
Signal System - City of Raleigh

Division 5 Wake County Raleigh

PLAN DATE:	Jan 2023	REVIEWED BY:	A. Ravipati
PREPARED BY:	M.P. Cavenaugh	REVIEWED BY:	H.M. Surti

SCALE 0 50 1"=50'

REVISIONS	INIT.	DATE

SEAL
NORTH CAROLINA PROFESSIONAL SEAL 034481 ENGINEER HEMANG M. SURTI

DocuSigned by: Hemang M. Surti 1/24/2023

CADD Filename:

1/24/2023
pw:\\aecom-na-pw.bentley.com:AECOM_DS21_NA_2020\Documents\60609754-U-5748 Ligon Mill\900-CAD GIS\910_CAD\70_NCDOT_TIP\Traffic\Signals\Design\Signals\2 - Signal Comm_Post Let_2022\U-5748_scp_psh_01_POST.dgn
TindalM