DocuSign Envelope ID: EE0A9FB1-617B-4D0E-A869-87C1A84AA294

PROJECT REFERENCE NO.	SHEET NO.
U-5748	Sig. 18.1

18 CHANNEL CONFLICT MONITOR PROGRAMMING DETAIL

(remove jumpers and set switches as shown)

REMOVE DIODE JUMPERS 1-5, 1-6, 1-9, 1-11, 1-15, 2-5, 2-6, 2-9, 2-11, 2-12, 2-13, 2-15, 4-8, 4-14, 4-16, 5-9, 5-11, 5-12, 5-13, 6-9, 6-11, 6-12, 6-13, 6-15, 8-14, 8-16, 9-11, 9-12, 9-13, 9-15, 11-12, 11-13, 11-15, 12-13, 12-15, 13-15 AND 14-16.

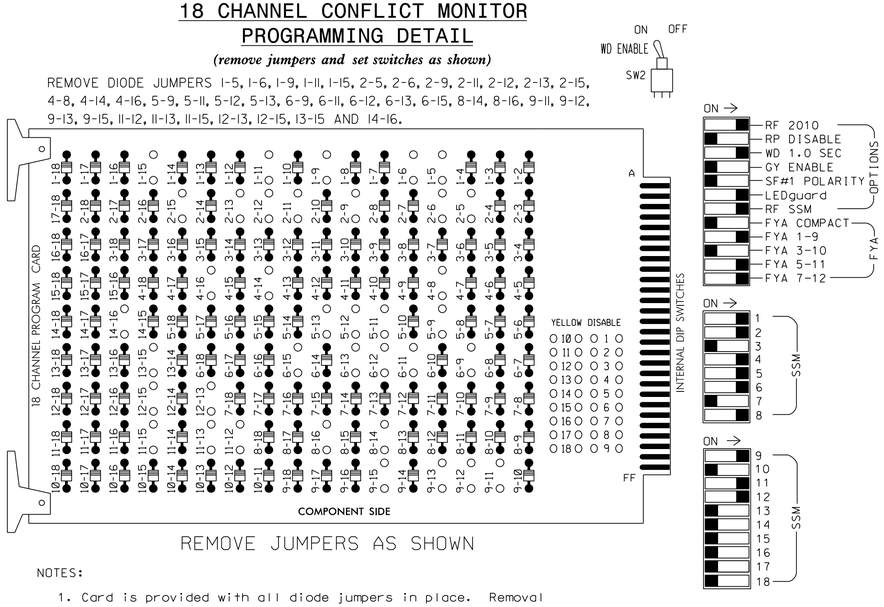

REMOVE JUMPERS AS SHOWN

■ = DENOTES POSITION OF SWITCH

NOTES:

1. Card is provided with all diode jumpers in place. Removal of any jumper allows its channels to run concurrently.
2. Ensure jumpers SEL2-SEL5 and SEL9 are present on the monitor board.
3. Ensure that Red Enable is active at all times during normal operation.
4. Connect serial cable from conflict monitor to comm. port 1 of 2070 controller. Ensure conflict monitor communicates with 2070.

NOTES

1. To prevent "flash-conflict" problems, insert red flash program blocks for all unused vehicle load switches in the output file. The installer shall verify that signal heads flash in accordance with the Signal Plans.
2. Program controller to start up in phases 2 and 6 green.
3. Enable simultaneous gap-out feature, on controller unit, for all phases.
4. Program phases 4 and 8, on controller unit, for dual entry.
5. Program phases 2 and 6, on controller unit, for volume density operation.
6. The cabinet and controller are part of the Raleigh City Signal System.

SIGNAL HEAD HOOK-UP CHART

LOAD SWITCH NO.	S1		S2	S3	S4	S5	S6	S7		S8	S9	S10	S11	S12	AUX S1	AUX S2	AUX S3	AUX S4	AUX S5	AUX S6
CMU CHANNEL NO.	1		2	13	3	4	14	5		6	15	7	8	16	9	10	17	11	12	18
PHASE	1		2	2 PED	3	4	4 PED	5		6	6 PED	7	8	8 PED	OLA	OLB	SPARE	OLC	OLD	SPARE
SIGNAL HEAD NO.	11★	82	21,22	P21, P22	NU	41,42 43	P41, P42	42	51★	61,62, 63	P61, P62	NU	81,82 83	P81, P82	11★	NU	NU	51★	23★	NU
RED		✳	128			101		✳		134			107						A101	
YELLOW			129			102				135			108							
GREEN			130			103				136			109							
RED ARROW															A121			A114		
YELLOW ARROW		126						132							A122			A115	A102	
FLASHING YELLOW ARROW															A123			A116	A103	
GREEN ARROW	127	127						133	133											
✋				113			104				119			110						
🚶				115			106				121			112						

NU = Not Used

★ See pictorial of head wiring in detail this sheet.

✳ Denotes install load resistor. See load resistor installation detail this sheet.

EQUIPMENT INFORMATION

CONTROLLER.....2070LX
CABINET.....332 W/ AUX
SOFTWARE.....SE-PAC2070
CABINET MOUNT.....BASE
OUTPUT FILE POSITIONS...18 WITH AUX. OUTPUT FILE
LOAD SWITCHES USED.....S1,S2,S3,S5,S6,S7,S8,S9,S11,S12
AUX S1,AUX S4,AUX S5
PHASES USED.....1,2,4,5,6,8,2PED,4PED,6PED,8PED
OVERLAP "A".....✳
OVERLAP "B".....NOT USED
OVERLAP "C".....✳
OVERLAP "D".....✳

✳ See Sheet 2 for Overlap programming.

INPUT FILE POSITION LAYOUT

(front view)

		1	2	3	4	5	6	7	8	9	10	11	12	13	14
FILE "I"	U	Ø1 1A	Ø2 2A	Ø2 1B	SLOT EMPTY	SLOT EMPTY	Ø4 4A	SLOT EMPTY	SLOT EMPTY	SLOT EMPTY	SLOT EMPTY	SLOT EMPTY	Ø2 PED DC ISOLATOR	Ø6 PED DC ISOLATOR	FS DC ISOLATOR
	L	NOT USED	Ø2 2B	NOT USED			NOT USED						Ø4 PED DC ISOLATOR	Ø8 PED DC ISOLATOR	ST DC ISOLATOR
FILE "J"	U	Ø5 5A	Ø6 6A	Ø5 5B	SLOT EMPTY	SLOT EMPTY	Ø8 8A	SLOT EMPTY	SLOT EMPTY	SLOT EMPTY	SLOT EMPTY	SLOT EMPTY	SLOT EMPTY	SLOT EMPTY	SLOT EMPTY
	L	NOT USED	Ø6 6B	NOT USED			NOT USED								

EX.: 1A, 2A, ETC. = LOOP NO.'S

FS = FLASH SENSE
ST = STOP TIME

INPUT FILE CONNECTION & PROGRAMMING CHART

LOOP NO.	LOOP TERMINAL	INPUT FILE POS.	PIN NO.	DETECTOR NO.	NEMA PHASE	DELAY TIME	EXTEND (STRETCH) TIME
1A	TB2-1,2	I1U	56	1	1	5	
1B	TB2-9,10	I3U	63	5	1	15	
2A	TB2-5,6	I2U	39	3	2		
2B	TB2-7,8	I2L	43	4	2		
4A	TB4-9,10	I6U	41	11	4		
5A	TB3-1,2	J1U	55	19	5	5	
5B	TB3-9,10	J3U	64	23	5	15	
6A	TB3-5,6	J2U	40	21	6		
6B	TB3-7,8	J2L	44	22	6		
8A	TB5-9,10	J6U	42	31	8		
PED PUSH BUTTONS							
P21,P22	TB8-4,6	I12U	67	PED 2	2 PED		
P41,P42,PB43	TB8-5,6	I12L	69	PED 4	4 PED		
P61,P62	TB8-7,9	I13U	68	PED 6	6 PED		
P81,P82,PB83	TB8-8,9	I13L	70	PED 8	8 PED		

NOTE:
INSTALL DC ISOLATORS IN INPUT FILE SLOTS I12 AND I13.

INPUT FILE POSITION LEGEND: J2L
FILE J
SLOT 2
LOWER

FYA SIGNAL WIRING DETAIL

(wire signal heads as shown)

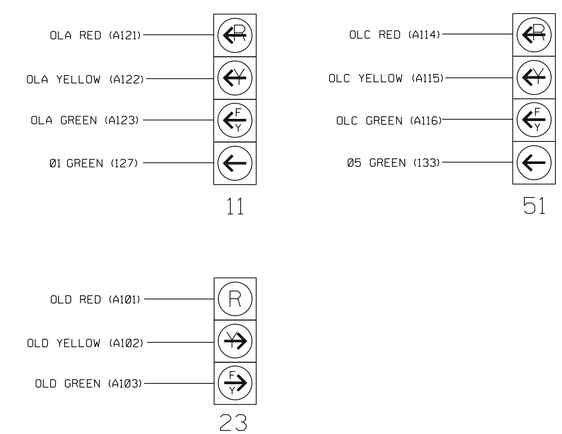

NOTE

1. See sheet 2 for Protected & Permissive Phases programming.

LOAD RESISTOR INSTALLATION DETAIL

(install resistors as shown below)

ACCEPTABLE VALUES

VALUE (ohms)	WATTAGE
1.5K - 1.9K	25W (min)
2.0K - 3.0K	10W (min)

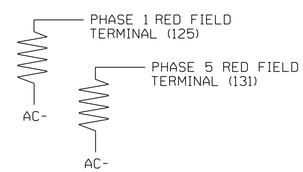

THIS ELECTRICAL DETAIL IS FOR
THE SIGNAL DESIGN: 05-2281
DESIGNED: Jan 2023
SEALED: 1/24/2023
REVISED:

AECOM
NC Firm License No.: F-0342
5438 Wade Park Boulevard
Suite 200 Raleigh, NC 27607
Phone: 919-461-1100

Electrical Detail - Sheet 1 of 3

DOCUMENT NOT CONSIDERED FINAL UNLESS ALL SIGNATURES COMPLETED

ELECTRICAL AND PROGRAMMING DETAILS FOR:

Prepared for the Offices of:
Traffic Engineering Mobility and Safety Division
STATE OF NORTH CAROLINA DEPARTMENT OF TRANSPORTATION
Traffic Signal Management Section
750 N.Greenfield Pkwy,Garner,NC 27529

US 401 (Louisburg Road) at Leland Drive

Division 5 | Wake County | Raleigh

PLAN DATE:	Jan 2023	REVIEWED BY:	H.M. Surti
PREPARED BY:	A. Ravipati	REVIEWED BY:	

REVISIONS	INIT.	DATE

SEAL
NORTH CAROLINA PROFESSIONAL SEAL 034481 ENGINEER HEMANG M. SURTI

DocuSigned by: Hemang M. Surti AF1DB8D67A5A41... 1/24/2023

SIG. INVENTORY NO. 05-2281

1/24/2023
pw:\\aecom-na-pw.bentley.com:AECOM_DS21_NA_2020\Documents\60609754-U-5748 Ligon Mill\#900-CAD GIS\910_CAD\70_NCDOT_TIP\Traffic\Signals\Design\Signals\Electrical Details_2022\05281_sm_ele_2022XXXX.dgn
michael.cavenaugh